4

Accessories

Chapter Contents

Introduction 4-3
- Cradles 4-3
- Spare Battery Chargers 4-3
- Cables. 4-3
- SD Card. 4-3
- Plastic Holster 4-3
- Fabric Holster 4-3

Single Slot Serial/USB Cradle 4-4
- Battery Charging. 4-4

Four Slot Cradles 4-6
- Battery Charging. 4-6
- LED Charge Indications 4-7
- Power LED 4-7
- Speed LED 4-7
- Link LED 4-7

Four Slot Spare Battery Charger 4-8
- Spare Battery Charging 4-8
- LED Charge Indications 4-8

Cables. 4-9
- Battery Charging and Operating Power 4-10
- LED Charge Indications 4-10

Universal Battery Charger (UBC) Adapter 4-11
- Spare Battery Charging 4-11
- UBC Adapter LED Charge Indications 4-12

Secure Device Card 4-13

Plastic Holster 4-14
Fabric Holster 4-16
Belt Clip 4-16
Shoulder Strap 4-17

Introduction

The MC3000 accessories provide a variety of product support capabilities. Accessories include cradles, cables, spare battery chargers and SD cards.

Cradles

- The Single Slot Serial/USB cradle charges the mobile computer main battery and/or a spare battery. It also synchronizes the mobile computer with a host computer through either a serial or a USB connection.
- The Four Slot Charge Only cradle charges up to four mobile computers.
- The Four Slot Ethernet cradle charges up to four mobile computers and provides Ethernet communication.

Spare Battery Chargers

- Four Slot Spare Battery Charger charges up to four MC3000 spare batteries.
- UBC Adapter adapts the UBC2000 for use with the MC3000 batteries.

Note

The accessory power supply regulatory compliance statements are provided in *Table C-1 on page C-3*.

Cables

The cables snap on to the mobile computer and are used to connect external devices to the mobile computer.

- USB client charge cable
- RS232 Charge cable
- O'Neil printer cable
- Zebra printer cable
- Monarch printer cable.

SD Card

The SD card provides additional storage capacity for the mobile computer.

Plastic Holster

The Plastic Holster provides a clip on holder for the mobile computer.

Fabric Holster

The Fabric Holster provides a clip on holder for the mobile computer.

Single Slot Serial/USB Cradle

The Single Slot Serial/USB cradle:

- Provides 5.4VDC power for operating the mobile computer, charging the battery and charging a spare battery.
- Provides a serial port and a USB port for data communication between the mobile computer and a host computer or other serial devices (e.g., a printer).
- Synchronizes information between the mobile computer and a host computer. With customized or third party software, it can also synchronize the mobile computer with corporate databases.
- Provides serial connection through the serial pass-through port for communication with a serial device, such as a host computer. For communication setup procedures, refer to the *MC3000 Integrator Guide*.
- Provides USB connection through the USB pass-through port for communication with a USB device, such as a host computer. For communication setup procedures, refer to the *MC3000 Integrator Guide*.

CAUTION

Use only a Symbol approved power supply output rated 12 VDC and minimum 3.3 A. Use of an alternative power supply will void the product warranty and may cause product damage. See Appendix C, Regulatory for the power supply regulatory compliance statement.

Battery Charging

The Single Slot Serial/USB cradle can charge the mobile computer main battery and a spare battery simultaneously.

To charge the mobile computer:

1. Slide the mobile computer into the mobile computer slot. The mobile computer amber Charge LED Indicator, indicates the mobile computer battery charging status. The Standard Battery charges in less than four hours and the Extended Life Battery charges in less than six hours. See Table 4-1 for charging status indications.

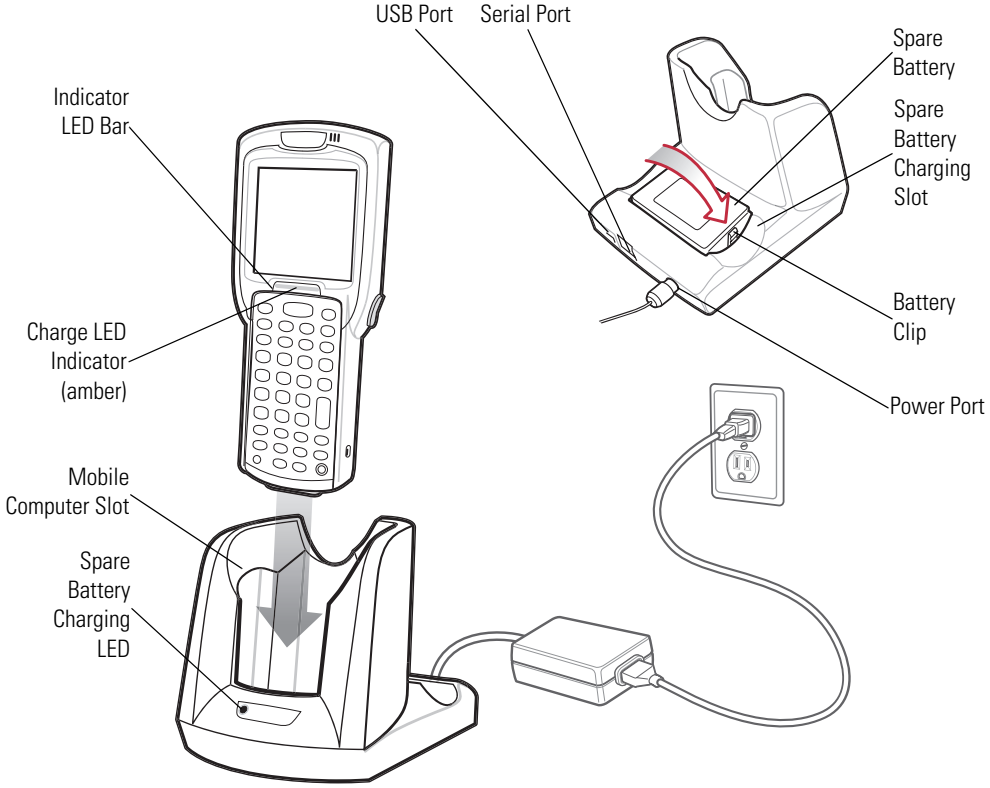

Figure 4-1. Single Slot Serial/USB Cradle

2. When charging is complete, remove the mobile computer from the mobile computer slot.

To charge the spare battery:

1. Insert the spare battery into the spare battery charging slot, bottom first, and pivot the top of the battery down onto the contact pins.
2. Gently press down on the battery to ensure proper contact.
3. The Spare Battery Charging LED (see *Figure 4-1 on page 4-4*) indicates the spare battery charging status. The Standard Battery charges in less than four hours and the Extended Life Battery charges in less than six hours. See Table 4-1 for charging status indications.
4. When charging is complete, press the battery clip and lift the battery out of the slot.

LED Charge Indications

The Single Slot Serial/USB cradle uses the mobile computer amber Charge LED Indicator to indicate the battery charging status and the Spare Battery Charging LED to indicate spare battery charging status. See Table 4-1 for charging status indications.

Table 4-1. LED Charging Status Indicators

LED	Indication
Mobile Computer Charging (LED on mobile computer)	
Off	Mobile computer not placed correctly in the cradle; cable not connected correctly; charger is not powered.
Fast Blinking Amber	Error in charging; check placement of mobile computer.
Slow Blinking Amber	Mobile computer is charging.
Solid Amber	Charging complete. Note: When the battery is initially inserted in the mobile computer, the amber LED flashes once if the battery power is low or the battery is not fully inserted.
Spare Battery Charging (LED on cradle)	
Off	No spare battery in slot; spare battery not placed correctly; cradle is not powered.
Fast Blinking Amber	Error in charging; check placement of spare battery.
Slow Blinking Amber	Spare battery is charging.
Solid Amber	Charging complete.

Four Slot Cradles

There are two four slot cradles, *Four Slot Charge Only* cradle and *Four Slot Ethernet* cradle. The Four Slot Ethernet cradle provides Ethernet communications. Both four slot cradles:

- Provide 5.4 VDC power for operating the mobile computer and charging the battery.
- Simultaneously charges up to four mobile computers.

CAUTION

Use only a Symbol approved power supply output rated 12 VDC and minimum 9 A. Use of an alternative power supply will void the product warranty and may cause product damage. See Appendix C, Regulatory for the power supply regulatory compliance statement.

Battery Charging

The four slot cradle can charge up to four mobile computers simultaneously. To charge the mobile computer:

1. Slide the mobile computer into the mobile computer slot.

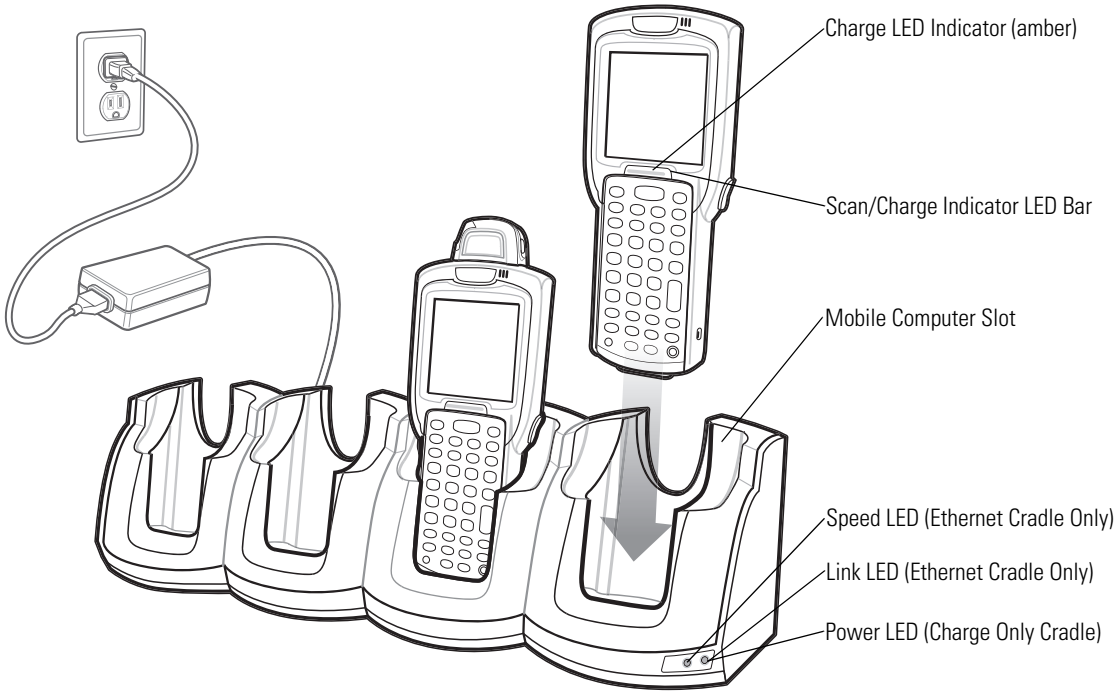

Figure 4-2. Four Slot Cradles

2. The mobile computer amber Charge LED Indicator, indicates the mobile computer battery charging status. The Standard Battery usually charges in less than four hours and the Extended Life Battery usually charges in less than six hours. See Table 4-1 for charging status indications.
3. When charging is complete, remove the mobile computer from the cradle.

LED Charge Indications

The Four Slot cradles use the mobile computer amber Charge LED Indicator to indicate the battery charging status. See *Table 4-1 on page 4-5* for charging status indications.

Power LED

The green Power LED (only on the Four Slot Charge Only cradle) lights to indicate that the Four Slot Charge Only cradle is connected to a power source.

Speed LED

The green Speed LED (only on the Four Slot Ethernet cradle) lights to indicate that the transfer rate is 100 Mbps. When it is not lit it indicates that the transfer rate is 10 Mbps.

Link LED

The yellow Link LED (only on the Four Slot Ethernet cradle) blinks to indicate activity, or stays lit to indicate that a link is established. When it is not lit, it indicates that there is no link.

Four Slot Spare Battery Charger

The Four Slot Spare Battery Charger simultaneously charges up to four spare batteries.

CAUTION

Use only a Symbol approved power supply output rated 12 VDC and minimum 3.3 A. Use of an alternative power supply will void the product warranty and may cause product damage. See Appendix C, Regulatory for the power supply regulatory compliance statement.

Spare Battery Charging

To charge up to four MC3000 spare batteries:

1. Insert the spare battery into the spare battery charging slot, bottom first.
2. Pivot the top of the battery down onto the contact pins.

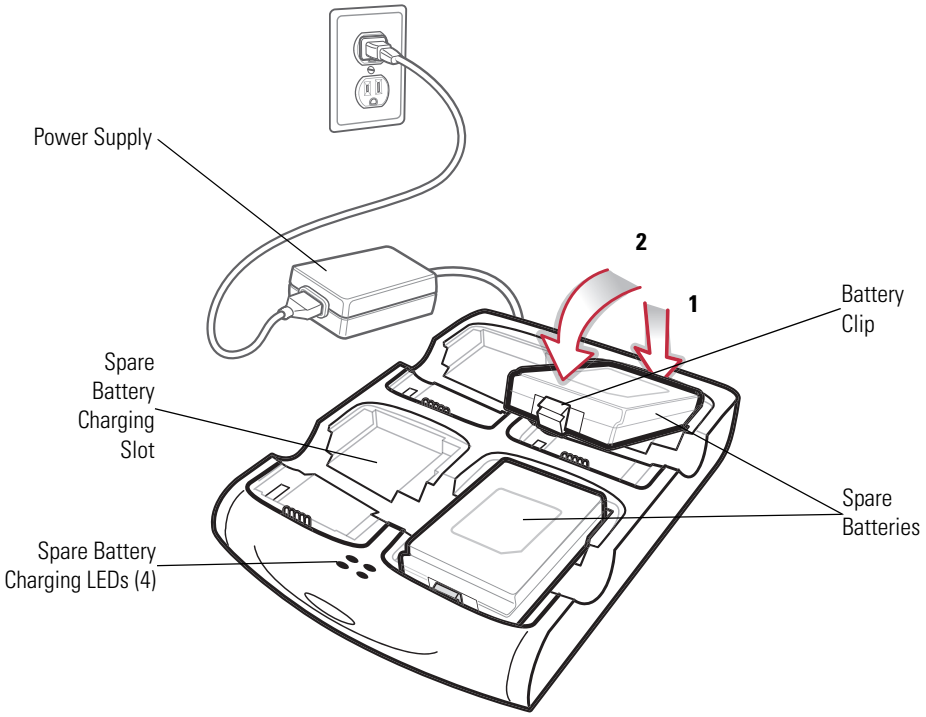

Figure 4-3. Four Slot Spare Battery Charger

3. Gently press down on the battery to ensure proper contact. The Standard Battery usually charges in less than four hours and the Extended Life Battery usually charges in less than six hours. See *Table 4-1 on page 4-5* for charging status indications.
4. When charging is complete, press the battery clip and lift battery out of the slot.

LED Charge Indications

The Spare Battery Charging LEDs indicate the spare battery charging status. The Spare Battery Charging LEDs are arranged in the same pattern as the spare battery charging slots so that the charging status of each battery can be identified. See *Table 4-1 on page 4-5* for charging status indications.

Cables

The cables are available with a variety of connection capabilities.

CAUTION

Use only a Symbol approved power supply output rated 5.4 VDC and minimum 3 A. Use of an alternative power supply will void the product warranty and may cause product damage. See Appendix C, Regulatory for the power supply regulatory compliance statement.

MC3000 Communication/Charge cables:

- Provide the mobile computer with operating and charging power when used with the Symbol approved power supply.
- Synchronize information between the mobile computer and a host computer. With customized or third party software, it can also synchronize the mobile computer with corporate databases.
- Provide serial connection through the serial pass-through port for communication with a serial device, such as a host computer. For communication setup procedures, refer to the *MC3000 Integrator Guide*.
- Provide USB connection through the USB pass-through port for communication with a USB device, such as a host computer. For communication setup procedures, refer to the *MC3000 Integrator Guide*.

The following MC3000 Communication/Charge cables are available:

- Serial (RS232) Charge cable (9-pin D female with power input receptacle)
- USB Client Charge cable (standard-A connector and a barrel receptacle for power).

Dedicated Printer cables, provide communication with a dedicated printer.

The following printer cables are available directly from the printer manufacturer:

- O'Neil printer cable
- Zebra printer cable
- Monarch printer cable.

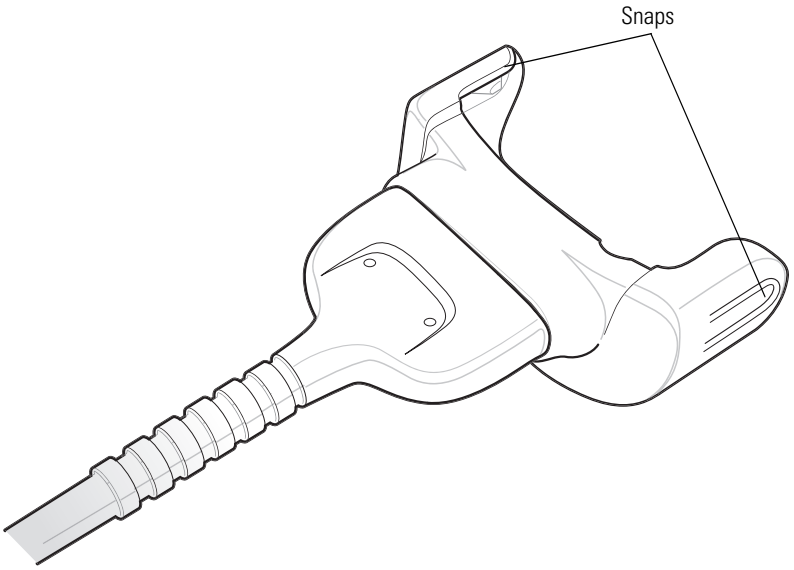

Figure 4-4. Cables

Battery Charging and Operating Power

The MC3000 Communication/Charge cables can charge the mobile computer battery and supply operating power.

To charge the mobile computer battery:

1. Connect the MC3000 Communication/Charge cable power input connector to the Symbol approved power source.
2. Slide the bottom of the mobile computer into the MC3000 connector end of the MC3000 Communication/Charge cable and gently press in until the snaps latch into the mobile computer.
3. The mobile computer amber Charge LED Indicator indicates the mobile computer battery charging status. The Standard Battery usually charges in less than four hours and the Extended Life Battery usually charges in less than six hours. See, *Table 4-1 on page 4-5* for charging status indications.
4. When charging is complete, remove the cable by gently pulling the mobile computer and the cable apart until the snaps release the mobile computer.

LED Charge Indications

The MC3000 Communication/Charge cables use the amber Charge LED Indicator to indicate the MC3000 battery charging status. See, *Table 4-1 on page 4-5* for charging status indications.

Universal Battery Charger (UBC) Adapter

The UBC Adapter can be used with a power supply as a standalone spare battery charger or it can be used with the four station UBC2000 to simultaneously charge up to four spare batteries. For additional information on the UBC 2000, refer to the *UBC 2000 Quick Reference Guide p/n* 70-33188-xx.

CAUTION

Use only a Symbol approved power supply output rated 15 VDC and minimum 1.5 A. Use of an alternative power supply will void the product warranty and may cause product damage. See Appendix C, Regulatory for the power supply regulatory compliance statement.

Spare Battery Charging

To charge spare batteries:

1. Insert the spare battery into the spare battery charging slot, bottom first.
2. Pivot the top of the battery down onto the contact pins.

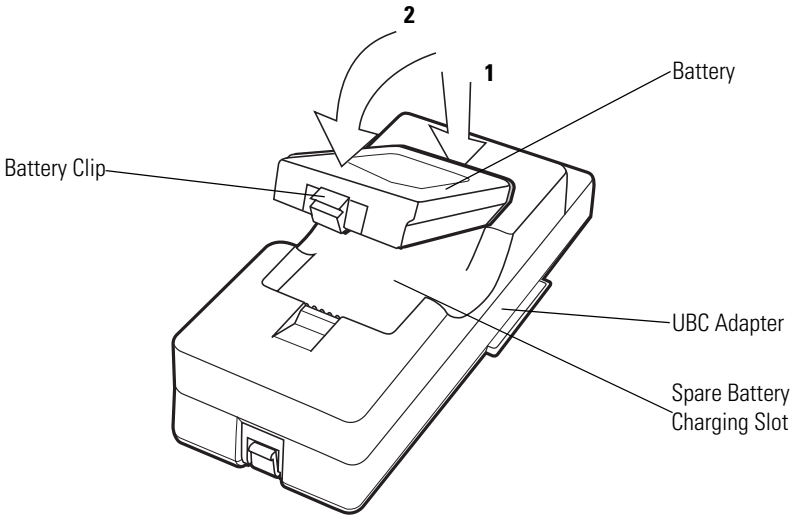

Figure 4-5. UBC Adapter Battery Insertion

3. Gently press down on the battery to ensure proper contact. The Standard Battery usually charges in less than four hours and the Extended Life Battery usually charges in less than six hours. See, *Table 4-2 on page 4-12* for charging status indications.
4. When charging is complete, press the battery clip and lift the battery out of the slot.

UBC Adapter LED Charge Indications

The UBC Adapter charging LEDs indicate the battery charging status. The Standard Battery usually charges in less than four hours and the Extended Life Battery usually charges in less than six hours.

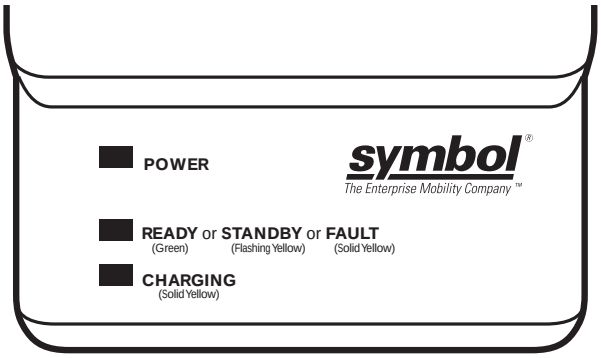

Figure 4-6. UBC Adapter LEDs

Table 4-2. UBC Adapter Charge LED Status Indications

LED	Indication	Description
POWER	Green	Power is connected to the UBC Adapter.
READY or	Green	Charging complete.
STANDBY or	Flashing-Yellow	The battery was deeply discharged and is being trickle charged to bring the voltage up to the operating level. After operating level voltage is achieved, the battery charges normally.
FAULT	Yellow	Charging error, check placement of mobile computer/spare battery.
CHARGING	Yellow	Normal charge.

Secure Device Card

The Secure Device (SD) card provides secondary non-volatile storage (the flash memory is slower than RAM). The SD card holder is located under the battery.

CAUTION

Follow proper Electro-Static Discharge (ESD) precautions to avoid damaging the SD card. Proper ESD precautions include, but are not limited to, working on an ESD mat and ensuring that the operator is properly grounded.

Do not use the SD card slot for any other accessories.

Note

Select SD cards with environmental and/or the write cycle performance specifications that meet or exceed the application requirements.

To insert the SD card:

1. Remove the battery (see *Main Battery Removal on page 1-12*).
2. Lift the SD card retaining door.
3. Position the SD card, with the contacts down, into the SD card slot. The SD card corner notch fits into the slot only one way.
4. Close SD card retaining door.

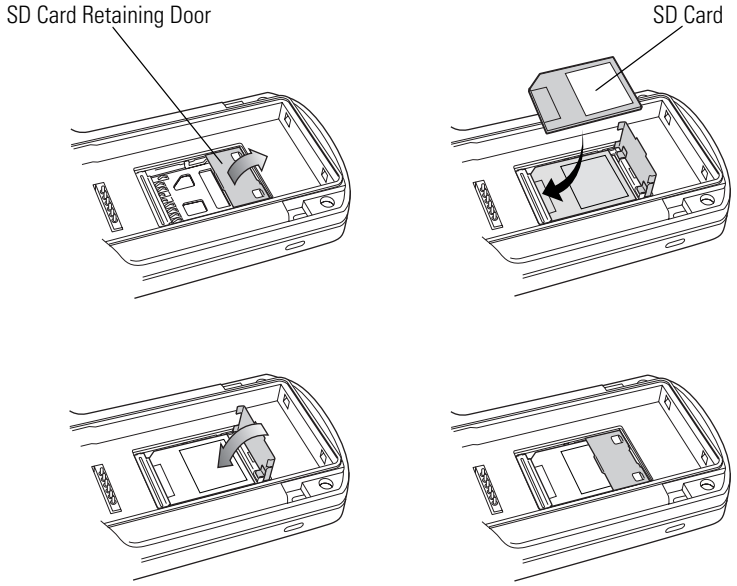

Figure 4-7. Inserting the SD Card

5. Replace the battery (see *Install Main Battery on page 1-6*).

Plastic Holster

The Plastic Holster provides a holder for the mobile computer. It consists of a mobile computer holder and a detachable belt clip. Press the release button to remove the detachable belt clip.

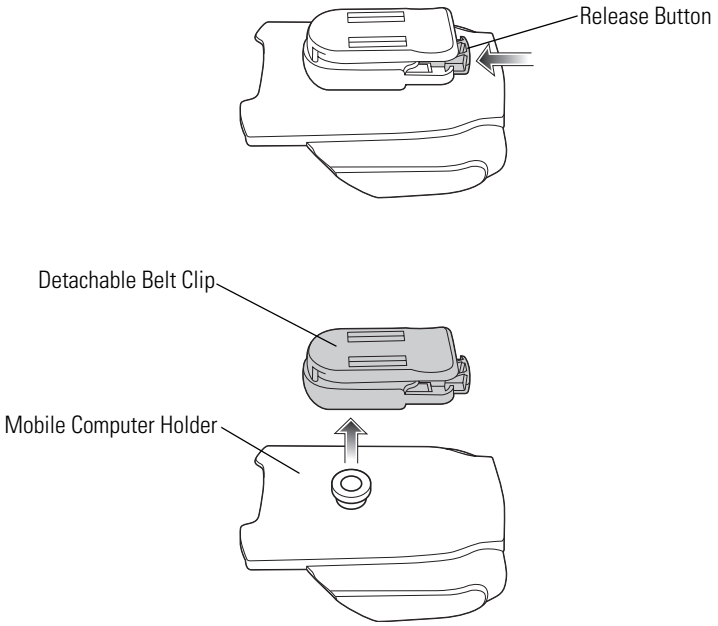

Figure 4-8. Plastic Holster

Pinch the clip release and attach the Plastic Holster to a belt or waist band.

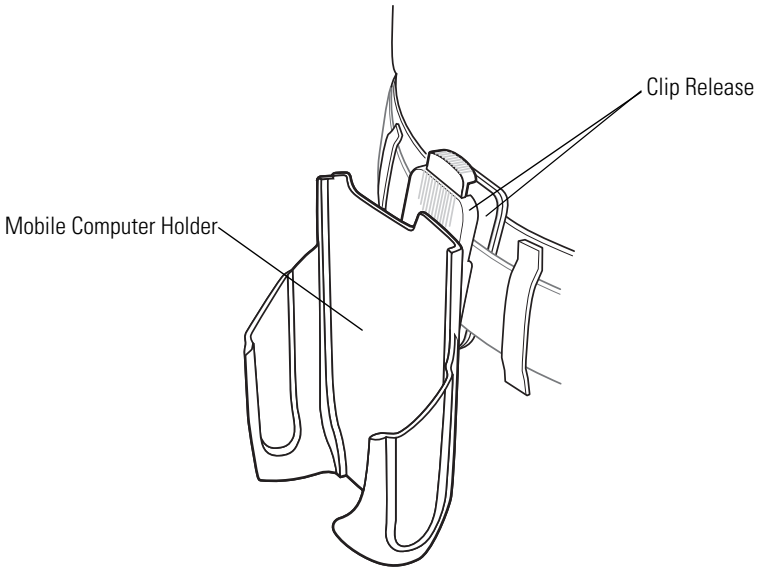

Figure 4-9. Attaching the Plastic Holster

The Plastic Holster holds the mobile computer on a belt or waist band.

To insert the mobile computer, slide the mobile computer into the Plastic Holster with the screen facing the user.

To remove the mobile computer, press and lift to remove the mobile computer.

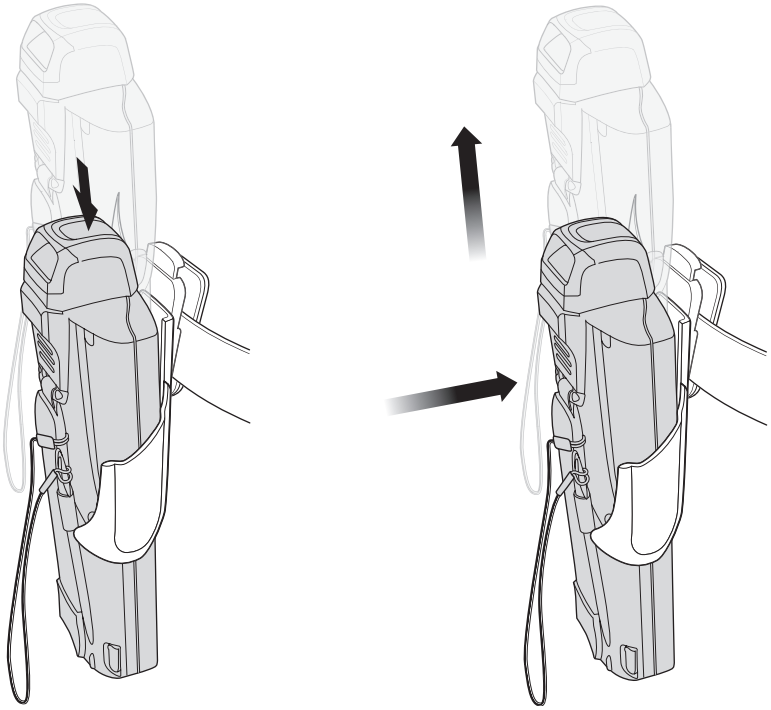

Insert Mobile Computer

Remove Mobile Computer

Figure 4-10. Insert and Remove the Mobile Computer

Fabric Holster

The Fabric Holster provides a soft holder for the mobile computer. It consists of a fabric mobile computer holder, a detachable shoulder strap and a detachable belt clip. Press the release button to remove the detachable belt clip. See Figure 4-11 to remove the detachable clip see *Figure 4-12 on page 4-16* to attach the Fabric Holster to a belt and see *Figure 4-13 on page 4-17* to attach the Fabric Holster to a shoulder strap. See *The Plastic Holster holds the mobile computer on a belt or waist band. on page 4-14* for instructions on inserting and removing the mobile computer.

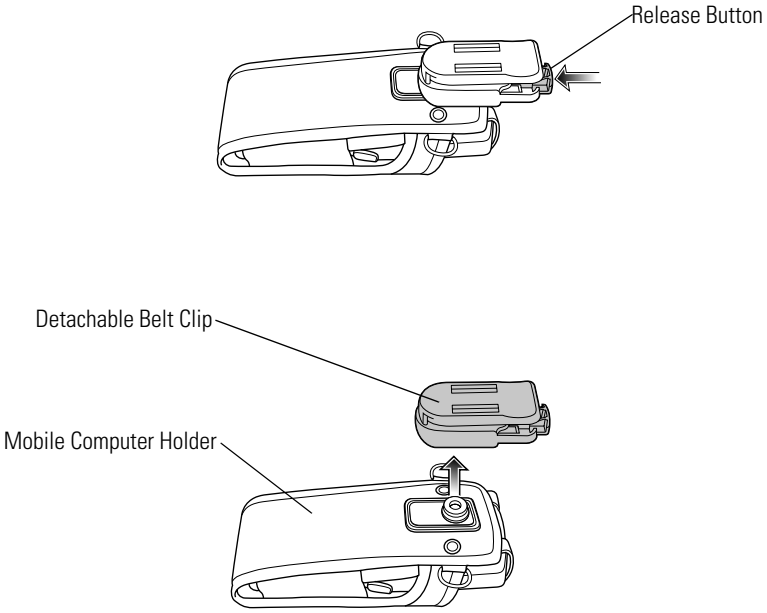

Figure 4-11. Fabric Holster Detachable Belt Clip

Belt Clip

Pinch the clip release and attach the Fabric Holster to a belt or waist band.

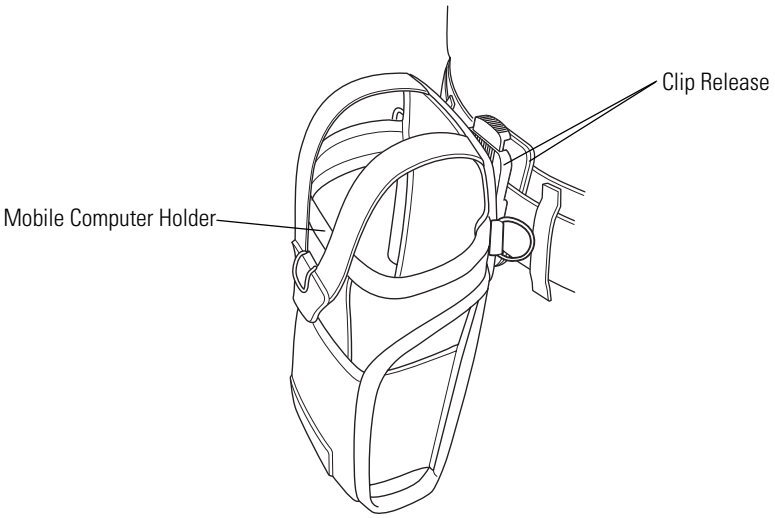

Figure 4-12. Attaching the Fabric Holster To a Belt

Shoulder Strap

Remove the detachable belt clip (see *Figure 4-11 on page 4-16)* and attach the shoulder strap.

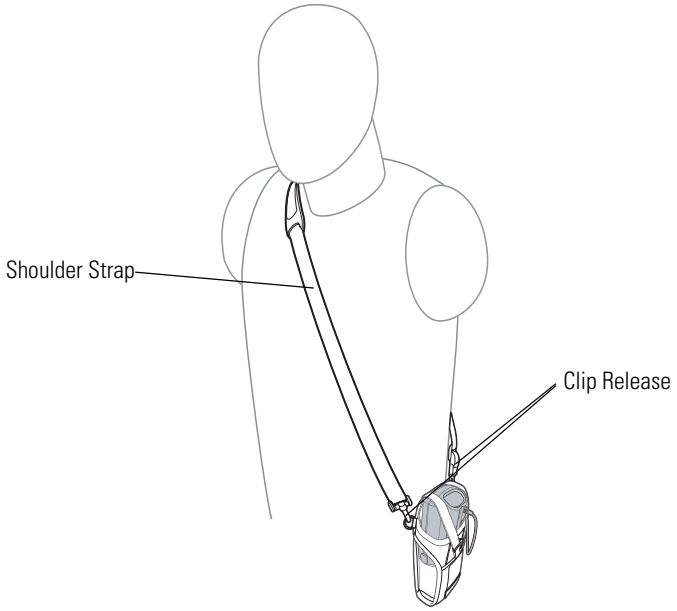

Figure 4-13. Attach the Fabric Holster To the Shoulder Strap

The Fabric Holster holds the mobile computer on a belt or waist band.

1. To insert the mobile computer, slide the mobile computer into the Fabric Holster with the screen facing the user.
2. Pull restraining strap over mobile computer and secure in the clip.
3. To remove the mobile computer, pull down on restraining strap to release from clip and lift retaining strap clear.
4. Lift mobile computer out of Fabric Holster.

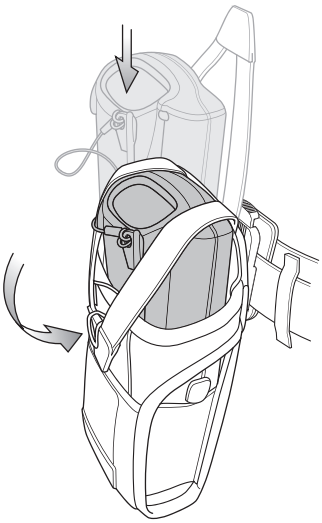

Figure 4-14. Insert and Remove the Mobile Computer

5

Maintenance & Troubleshooting

Introduction 5- 3
Maintaining the Mobile Computer. 5-3
Troubleshooting 5-4
Mobile Computer 5-4
Single Slot Serial/USB Cradle 5-6
Four Slot Charge Only Cradle. 5-7
Four Slot Ethernet Cradle. 5-7
Four Slot Spare Battery Charger 5-8
UBC Adapter. 5-8
Cables. 5-9

Introduction

This chapter includes instructions on cleaning and storing the mobile computer, and provides troubleshooting solutions for potential problems during mobile computer operation.

Maintaining the Mobile Computer

For trouble-free service, observe the following tips when using the mobile computer:

- Do not scratch the screen of the mobile computer. When working with the mobile computer, use the supplied stylus or plastic-tipped pens intended for use with a touch-sensitive screen. Never use an actual pen or pencil or other sharp object on the surface of the mobile computer screen.
- Although the mobile computer is water and dust resistant, do not expose it to rain or moisture for an extended period of time. In general, treat the mobile computer as a pocket calculator or other small electronic instrument.
- The touch-sensitive screen of the mobile computer is glass. Do not to drop the mobile computer or subject it to strong impact.
- Protect the mobile computer from temperature extremes. Do not leave it on the dashboard of a car on a hot day, and keep it away from heat sources.
- Do not store or use the mobile computer in any location that is extremely dusty, damp, or wet.
- Use a soft lens cloth to clean the mobile computer. If the surface of the mobile computer screen becomes soiled, clean it with a soft cloth moistened with a diluted window-cleaning solution.

Troubleshooting

Mobile Computer

Table 5-1. Troubleshooting the Mobile Computer

Problem	Cause	Solution
Mobile computer does not turn on.	Main battery not charged.	Charge or replace the main battery.
	Main battery not installed properly.	Ensure the battery is installed properly. See *Install Main Battery on page 1-6*.
	System crash.	Perform a warm boot. If the mobile computer still does not turn on, perform a cold boot. For more information see, *Resetting the Mobile Computer on page 2-23*.
Battery did not charge.	Battery failed.	Replace battery. If the mobile computer still does not operate, try a warm boot, then a cold boot. For more information see, *Resetting the Mobile Computer on page 2-23*.
	Mobile computer removed from cradle while battery was charging.	Insert mobile computer in cradle and begin charging. The Standard Battery requires up to four hours to recharge fully and the Extended Life Battery requires up to six hours to recharge fully.
	Extreme battery temperature.	Battery does not charge if ambient temperature is below 32°F (0°C) or above 104°F (40°C).
Cannot see characters on screen.	Mobile computer not powered on.	Press the **Power** button.
During data communication, no data was transmitted, or transmitted data was incomplete.	Mobile computer removed from cradle or unplugged from host computer during communication.	Replace the mobile computer in the cradle, or reattach the cable and re-transmit.
	Incorrect cable configuration.	See the system administrator or refer to the *MC3000 Integrator Guide*.
	Communication software was incorrectly installed or configured.	See the system administrator or refer to the *MC3000 Integrator Guide*.
Mobile computer does not emit sound.	Volume setting is low or turned off.	Mobile computer may be a beeper only configuration or incorrect setting is programmed into device.
Mobile computer turns itself off.	Mobile computer is inactive.	The mobile computer turns off after a period of inactivity. This period can be set from one to five minutes, in one-minute intervals.
	Battery is depleted.	Recharge or replace the battery.
	Battery is not inserted properly.	Insert the battery properly. For more information see, *Install Main Battery on page 1-6*.
Tapping the window buttons or icons does not activate the corresponding feature.	Touch screen not calibrated correctly.	Re-calibrate the screen. From the mobile computer, *Demo window* double-tap the *Ctl Panel* icon and double-tap on *Touch Calibrate*. Follow the screen prompts.
	The system crashed.	Warm boot the system. To perform a warm boot, see *Resetting the Mobile Computer on page 2-23*.
A message appears stating that the mobile computer memory is full.	Too many files stored on the mobile computer.	Delete unused memos and records. If necessary, save these records on the host computer.
	Too many applications installed on the mobile computer.	Remove unused installed applications from the mobile computer to recover memory.

Table 5-1. Troubleshooting the Mobile Computer (Continued)

Problem	Cause	Solution
The mobile computer does not accept scan input.	Scanning application is not loaded.	Verify that the mobile computer is loaded with a scanning application. See the system administrator.
	Unreadable bar code.	Ensure the symbol is not defaced.
	Distance between scan window and bar code is incorrect.	Ensure the mobile computer is within proper scanning range.
	Mobile computer is not programmed for the bar code type.	Ensure the mobile computer is programmed to accept the type of bar code scanned.
	Mobile computer is not programmed to generate a beep.	If a beep on a good decode is expected and a beep is not heard, check that the application is set to generate a beep on good decode.
	Battery is low.	Check the battery level. When the battery is low, the mobile computer automatically goes into suspend mode.

Single Slot Serial/USB Cradle

Table 5-2. Troubleshooting the Single Slot Serial/USB Cradle

Symptom	Possible Cause	Solution
Mobile computer amber Charge LED Indicator does not light when mobile computer inserted.	Cradle is not receiving power.	Ensure the power cable is connected securely to both the cradle and to AC power.
	Mobile computer is not correctly seated.	Remove and re-insert the mobile computer into the cradle, ensuring it is correctly seated.
Spare Battery Charging LED does not light when spare battery is inserted.	Spare battery is not correctly seated.	Remove and re-insert the spare battery into the charging slot, ensuring it is correctly seated.
Mobile computer battery is not charging.	Mobile computer was removed from cradle or cradle was unplugged from AC power too soon.	Ensure cradle is receiving power. Ensure the mobile computer is seated correctly. If the mobile computer battery is fully depleted, it can take up to four hours to fully recharge a Standard Battery and it can take up to six hours to fully recharge an Extended Life Battery.
	Battery is faulty.	Verify that other batteries charge properly. If so, replace the faulty battery.
	The mobile computer is not fully seated in the cradle.	Remove and re-insert the mobile computer into the cradle, ensuring it is correctly seated.
Spare battery is not charging.	Battery not fully seated in charging slot.	Remove and re-insert the spare battery into the cradle, ensuring it is correctly seated.
	Battery inserted incorrectly.	Ensure the contacts are facing down and toward the back of the cradle.
	Battery is faulty.	Verify that other batteries charge properly. If so, replace the faulty battery.
During data communication, no data was transmitted, or transmitted data was incomplete.	Mobile computer removed from cradle during communication.	Replace mobile computer in cradle and retransmit.
	Incorrect cable configuration.	See the system administrator or refer to the *MC3000 Integrator Guide*.
	Communication software is not installed or configured properly.	See the system administrator or refer to the *MC3000 Integrator Guide*.

Four Slot Charge Only Cradle

Table 5-3. Troubleshooting the Four Slot Charge Only Cradle

Problem	Cause	Solution
Mobile computer amber Charge LED Indicator does not light when mobile computer inserted.	Cradle is not receiving power.	Ensure the power cable is connected securely to both the cradle and to AC power.
	Mobile computer is not correctly seated.	Remove and re-insert the mobile computer into the cradle, ensuring it is correctly seated.
Mobile computer battery is not charging.	Mobile computer was removed from cradle or cradle was unplugged from AC power too soon.	Ensure cradle is receiving power. Ensure the mobile computer is seated correctly. If the mobile computer battery is fully depleted, it can take up to four hours to fully recharge a Standard Battery and it can take up to six hours to fully recharge an Extended Life Battery.
	Battery is faulty.	Verify that other batteries charge properly. If so, replace the faulty battery.
	The mobile computer is not fully seated in the cradle.	Remove and re-insert the mobile computer into the cradle, ensuring it is correctly seated.

Four Slot Ethernet Cradle

Table 5-4. Troubleshooting the Four Slot Ethernet Cradle

Problem	Cause	Solution
Mobile computer amber Charge LED Indicator does not light when mobile computer inserted.	Cradle is not receiving power.	Ensure the power cable is connected securely to both the cradle and to AC power.
	Mobile computer is not correctly seated.	Remove and re-insert the mobile computer into the cradle, ensuring it is correctly seated.
Mobile computer battery is not charging.	Mobile computer was removed from cradle or cradle was unplugged from AC power too soon.	Ensure cradle is receiving power. Ensure the mobile computer is seated correctly. If the mobile computer battery is fully depleted, it can take up to four hours to fully recharge a Standard Battery and it can take up to six hours to fully recharge an Extended Life Battery.
	Battery is faulty.	Verify that other batteries charge properly. If so, replace the faulty battery.
	The mobile computer is not fully seated in the cradle.	Remove and re-insert the mobile computer into the cradle, ensuring it is correctly seated.
During data communication, no data was transmitted, or transmitted data was incomplete.	Mobile computer removed from cradle during communication.	Replace mobile computer in cradle and retransmit.
	Incorrect cable configuration.	See the system administrator or refer to the *MC3000 Integrator Guide.*
	Ethernet connection error. Link LED is not lit (see *Link LED on page 4-7*).	See the system administrator. Probable Ethernet connection error.

Four Slot Spare Battery Charger

Table 5-5. Troubleshooting the Four Slot Spare Battery Charger

Symptom	Possible Cause	Solution
Spare Battery Charging LED does not light when spare battery is inserted.	Spare battery is not correctly seated.	Remove and re-insert the spare battery into the charging slot, ensuring it is correctly seated.
Spare battery is not charging.	Charger is not receiving power.	Ensure the power cable is connected securely to both the charger and to AC power.
	Spare battery is not correctly seated.	Remove and re-insert the battery into the charger, ensuring it is correctly seated.
	Spare battery was removed from charger or charger was unplugged from AC power too soon.	Ensure charger is receiving power. Ensure the spare battery is seated correctly. If a battery is fully depleted, it can take up to four hours to fully recharge a Standard Battery and it can take up to six hours to fully recharge an Extended Life Battery.
	Spare battery is faulty.	Verify that other batteries charge properly. If so, replace the faulty battery.

UBC Adapter

Table 5-6. Troubleshooting the UBC Adapter

Symptom	Possible Cause	Solution
Battery Charging LED does not light when spare battery is inserted.	Spare battery is not correctly seated.	Remove and re-insert the spare battery into the charging slot, ensuring it is correctly seated.
Battery not charging.	Charger is not receiving power.	Ensure the power cable is connected securely to both the charger and to AC power.
	Spare battery is not correctly seated.	Remove and re-insert the spare battery into the charger, ensuring it is correctly seated.
	Spare battery was removed from charger or charger was unplugged from AC power too soon.	Ensure charger is receiving power. Ensure the spare battery is seated correctly. If a battery is fully depleted, it can take up to four hours to fully recharge a Standard Battery and it can take up to six hours to fully recharge an Extended Life Battery.
	Spare battery is faulty.	Verify that other batteries charge properly. If so, replace the faulty battery.

Cables

Table 5-7. Troubleshooting the Cables

Symptom	Possible Cause	Solution
Mobile computer amber Charge LED Indicator does not light when mobile computer attached.	Cable is not receiving power.	Ensure the power cable is connected securely to both the cable and to AC power.
	Mobile computer is not seated correctly in the cable.	Remove and re-attach the mobile computer to the MC3000 connector, ensuring it is correctly seated.
Mobile computer battery is not charging.	Mobile computer was detached from cable or cable was unplugged from AC power too soon.	Ensure cable is receiving power. Ensure the mobile computer is seated correctly. If the mobile computer battery is fully depleted, it can take up to four hours to fully recharge a Standard Battery and it can take up to six hours to fully recharge an Extended Life Battery.
	Battery is faulty.	Verify that other batteries charge properly. If so, replace the faulty battery.
	The mobile computer is not fully seated in the cable.	Remove and re-attach the mobile computer to the cable, ensuring it is correctly seated.
During data communication, no data was transmitted, or transmitted data was incomplete.	Cable removed from mobile computer during communication.	Reattach cable to mobile computer and retransmit.
	Incorrect cable configuration.	See the system administrator or refer to the *MC3000 Integrator Guide.*
	Communication software is not installed or configured properly.	See the system administrator or refer to the *MC3000 Integrator Guide.*

A

Technical Specifications

Appendix Contents

Mobile Computer And Accessory Technical Specifications A-3

Mobile Computer And Accessory Technical Specifications

Table A-1 summarizes the mobile computer technical specifications and intended operating environments.

Table A-2 summarizes the accessory technical specifications and the intended operating environments.

Table A-1. Mobile Computer Technical Specifications

Operating Temperature	Color 14° to 122°F (-10° to +50°C) Monochrome -4° to 122°F (-20° to +50°C)
Storage Temperature	-22° to 158°F (-30° to 70°C)
Battery Charging Temperature	32° to 104° F (0° to +40° C) ambient temperature
Humidity	5% to 95% non-condensing
Electrostatic Discharge (ESD)	+/-15 kV air discharge +/- 8 kV direct discharge +/- 8 kV indirect discharge
Drop to Concrete	4 feet (1.2 meters)
Sealing	IP54 category 2
Drop	Multiple 4-foot (1.2 m) drops to concrete across operating temperature
Tumble	500 one half meter tumbles at room temperature (1000 drops)
Dimensions	MC3000-K: 7.43 in L x 3.18 in W x 1.76 in D (188.7 mm L x 80.8 mm W x 44.6 mm D) MC3000-R: 8.33 in L x 3.18 in W x 1.57 in D (211.6 mm L x 80.8 mm W x 39.9 mm D) MC3000-G: 7.60 in L x 3.18 in W x 6.54 in D (193 mm L x 80.8 mm W x 166 mm H)
Weights	MC3000-R (with standard battery)* - 12.9 oz (366 g) MC3000-K (with extended battery)* - 14.6 oz (414 g) MC3000-G (with extended battery)* - 18.6 oz (527 g) *For WLAN mobile computers add approximately 0.5 oz (14 g).
Display	Transflective color TFT-LCD, 65K colors, 324 x 324 Monochrome FSTN, 16 shades, 320 x 320
Touch Panel	Glass, analog resistive touch
Main Battery	Standard: Rechargeable Lithium-Polymer 2600 mAh minimum (3.7V) Extended Life: Rechargeable Lithium-Ion 4400 mAh minimum (3.7V)
Backup Battery	Ni-MH battery (rechargeable), 20mAh (3.6V) 3 cells
Operating Platform	Microsoft® Windows CE .NET 5.0 Professional Microsoft® Windows CE .NET 5.0 Core

Table A-1. Mobile Computer Technical Specifications (Continued)

Processor/Memory	Intel® XScale™ PXA270 312MHz with 32MB RAM/64MB Flash or Intel® XScale™ PXA270 520MHz with 64MB RAM/64MB Flash
Interface	RS232, 115.2 kbps max, and USB
WLAN	Symbol Spectrum 24, 802.11abg
Keypad Options	28-Key, 38-Key and 48-Key
Data Capture: 1-D Decode Capability* Imaging Decode Capability*	 Code 39, code 128, code 93, codabar, code 11, discrete 2 of 5, EAN-3, EAN-13, EAN-128, interleaved 2 of 5, UPCA, UPCE and UPC/EAN supplements. Code 39, code 128, code 93, codabar, code 11, discrete 2 of 5, EAN-3, EAN-13, EAN-128, interleaved 2 of 5, TLC39 (telecommunications, UPCA, UPCE, UPC/EAN supplements composite code (retail), coupon code (retail), macro PDF-417, (macro) micro PDF-417 (T&L), micro PDF-417 (telecommunications), MSI Plessey, PDF-417 (automotive), RSS expanded, RSS limited and RSS-14Maxi Code (UPS), Data matrix (electronics industry, US Planet (USPS), UK 4-state, Australian 4-state, Canadian 4-state, Japanese 4-state, Dutch Kix *Go to http://software.symbol.com/ for a list of the latest supported symbologies.
SD cards	Select SD cards with environmental and/or the write cycle performance specifications that meet or exceed the application requirements.

Table A-2. Accessory Specifications

	Single Slot Serial/USB Cradle	Cables	Four Slot Charge Only and Four Slot Ethernet Cradles	Four Slot Spare Battery Charger	Universal Battery Charger (UBC) Adapter
Operating Temperature	32° to 122°F (0° to +50°C)			32° to 104°F (0° to +40°C)	
Storage Temperature	-40° to 158°F (-40° to 70°C)				
Battery Charging Temperature	32° to 104° F (0° to +40° C) ambient temperature				
Humidity	5% to 95% non-condensing				
Size (L x D x H)	4.4 in x 5.7 in x 4.7 in (11.2 cm x 14.5 cm x 12 cm)	6 feet (1.83 m)	18 in x 4 in x 5 in (45.7 cm x 10.1 cm x 12 cm)	8.25 in x 6.0 in x 1.7 in (20.96 cm x 15.24 cm x 4.32 cm)	2.5 in x 6.1 in x 1.5 in (6.4 cm x 15.5 cm x 3.8 cm)
Weight	0.60 lbs (0.27 kg)	N/A	Charge only: 2.25 lbs (1.02 kg) Ethernet: 2.38 lbs (1.08 kg)	13.6 oz (386 g)	0.25 lbs (0.11 kg)
Power	12V, 3.3 A	5.4V, 3 A	12V, 9 A	12V, 3.3 A	15V, 1.5 A
Drop	30 inches (76.2 centimeter) to vinyl covered concrete				
Electrostatic Discharge (ESD)	+/-15 kV air discharge, +/- 8 kV direct discharge, +/- 8 kV indirect discharge				

B

Keypad Functions/Special Characters

Appendix Contents

Introduction B-3
Keypads B-3

Introduction

This appendix contains the keypad functions/special characters for the 38-Key keypad. Each function/special character is included in the table along with how the function/special character is generated.

Keypads

The mobile computer is available with one of three keypads:

- 28-key keypad
- 38-key keypad
- 48-key keypad.

The keypads can be selected as necessary to support specialized applications. The keypads contain a **Power** button, application keys, scroll keys and function keys. The keypad is color-coded to indicate the alternate function key (blue) values and the alternate ALPHA key (orange) values. See Table B-1 for the special character generation. Characters can also be generated using the keyboard input panel. For more information see, *Entering Information Using the Keyboard Input Panel* on page 2-16.

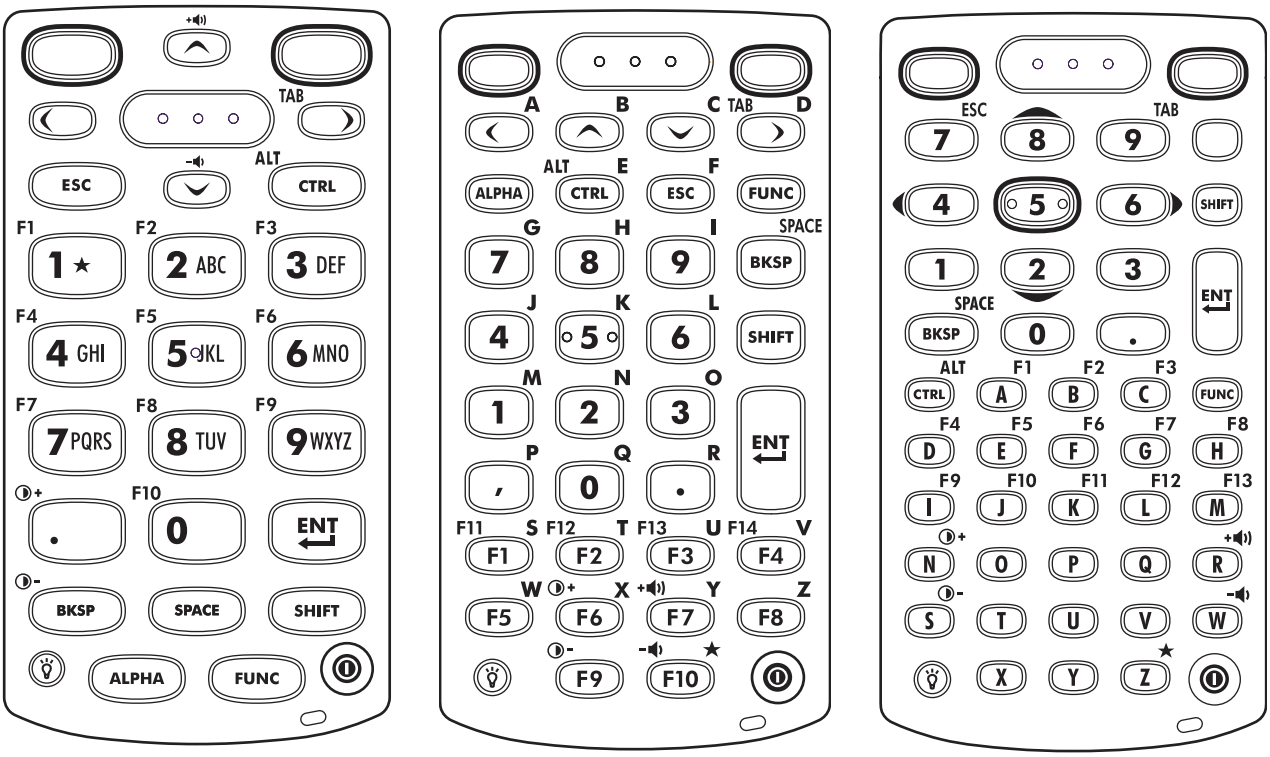

28-Key Keypad

38-Key Keypad

48-Key Keypad

Figure 2-1. Keypads

Table B-1. Special Character Generation Map

Special Character	28-Key Keypad Key Sequence, Special Character Generation	38-Key Keypad Key Sequence, Special Character Generation	48-Key Keypad Key Sequence, Special Character Generation
[	Use the Keyboard Input Panel*	FUNC + 4	FUNC + T
]	Use the Keyboard Input Panel*	FUNC + 5	FUNC + U
/	Use the Keyboard Input Panel*	FUNC + 9	FUNC + Q
\	Use the Keyboard Input Panel*	FUNC + 3	Use the Keyboard Input Panel*
=	Use the Keyboard Input Panel*	FUNC + 8	FUNC + P
;	Use the Keyboard Input Panel*	FUNC + 6	FUNC + V
-	Use the Keyboard Input Panel*	FUNC + 7	FUNC + O
`	Use the Keyboard Input Panel*	FUNC + 2	FUNC + Y
“	Use the Keyboard Input Panel*	SHIFT + FUNC + 1	Use the Keyboard Input Panel*
!	SHIFT + 1	SHIFT + 1	SHIFT + 1
@	SHIFT + 2	SHIFT + 2	SHIFT + 2
#	SHIFT + 3	SHIFT + 3	SHIFT + 3
$	SHIFT + 4	SHIFT + 4	SHIFT + 4
%	SHIFT + 5	SHIFT + 5	SHIFT + 5
^	SHIFT + 6	SHIFT + 6	SHIFT + 6
&	SHIFT + 7	SHIFT + 7	SHIFT + 7
*	SHIFT + 8	SHIFT + 8	SHIFT + 8
(	SHIFT + 9	SHIFT + 9 or FUNC + SHIFT + 9	SHIFT + 9
)	SHIFT + 0	SHIFT + 0 or FUNC + SHIFT + 0	SHIFT + 0
‘	Use the Keyboard Input Panel*	FUNC + 1	FUNC + X
“	Use the Keyboard Input Panel*	Use the Keyboard Input Panel*	Use the Keyboard Input Panel*
+	Use the Keyboard Input Panel*	SHIFT + FUNC + 8	Use the Keyboard Input Panel*
:	Use the Keyboard Input Panel*	SHIFT + FUNC + 6	Use the Keyboard Input Panel*
<	Use the Keyboard Input Panel*	FUNC + SHIFT + ,	Use the Keyboard Input Panel*
>	Use the Keyboard Input Panel*	FUNC + SHIFT + .	SHIFT + .
?	Use the Keyboard Input Panel*	SHIFT + FUNC + 9	Use the Keyboard Input Panel*
_	Use the Keyboard Input Panel*	SHIFT + FUNC + 7	Use the Keyboard Input Panel*
{	Use the Keyboard Input Panel*	SHIFT + FUNC + 4	Use the Keyboard Input Panel*
}	Use the Keyboard Input Panel*	SHIFT + FUNC + 5	Use the Keyboard Input Panel*
~	Use the Keyboard Input Panel*	SHIFT + FUNC + 2	Use the Keyboard Input Panel*
|	N/A	SHIFT + FUNC + 3	N/A
* See *Entering Information Using the Keyboard Input Panel* on page 2-16.			

C

Regulatory

Appendix Contents

Introduction B-3
Accessory Power Supply Regulatory Compliance B-3

Introduction

This appendix contains the accessory power supply regulatory compliance statements.

Accessory Power Supply Regulatory Compliance

Table C-1. Accessory Power Supplies, Regulatory Compliance Statements

Accessory	Power Supplies Regulatory Compliance Statements
Single Slot Serial/USB Cradle Power Supply	Use only a Symbol-approved power supply output rated 12 VDC and minimum 3.3 A. The power supply is certified to EN60950 with SELV outputs. Use of alternative power supply will invalidate any approval given to this device and may be dangerous. Hinweis: Benutzen Sie nur eine von Symbol Technologies genehmigte Stromversorgung mit einer Ausgangsleistung von 12 V (Gleichstrom) und mindestens 3.3 A. Die Stromversorgung ist nach EN60950 für die Verwendung in SELV-Stromkreisen zertifiziert. Bei Verwendung eines anderen Netzteils werden alle für das Gerät gewährten Genehmigungen außer Kraft gesetzt, und der Betrieb kann gefährlich sein.
Four Slot Spare Battery Charger Power Supply	
Four Slot Charge Only Cradle Power Supply	Use only a Symbol-approved power supply output rated 12 VDC and minimum 9 A. The power supply is certified to EN60950 with SELV outputs. Use of alternative power supply will invalidate any approval given to this device and may be dangerous. Hinweis: Benutzen Sie nur eine von Symbol Technologies genehmigte Stromversorgung mit einer Ausgangsleistung von 12 V (Gleichstrom) und mindestens 9 A. Die Stromversorgung ist nach EN60950 für die Verwendung in SELV-Stromkreisen zertifiziert. Bei Verwendung eines anderen Netzteils werden alle für das Gerät gewährten Genehmigungen außer Kraft gesetzt, und der Betrieb kann gefährlich sein.
Four Slot Ethernet Cradle Power Supply	
Universal Battery Charger (UBC) Adapter Power Supply	Use only a Symbol-approved power supply output rated 15 VDC and minimum 1.5 A. The power supply is certified to EN60950 with SELV outputs. Use of alternative power supply will invalidate any approval given to this device and may be dangerous. Hinweis: Benutzen Sie nur eine von Symbol Technologies genehmigte Stromversorgung mit einer Ausgangsleistung von 15 V (Gleichstrom) und mindestens 1.5 A. Die Stromversorgung ist nach EN60950 für die Verwendung in SELV-Stromkreisen zertifiziert. Bei Verwendung eines anderen Netzteils werden alle für das Gerät gewährten Genehmigungen außer Kraft gesetzt, und der Betrieb kann gefährlich sein.
Charging Cables Power Supply	Use only a Symbol-approved power supply output rated 5.4 VDC and minimum 3 A. The power supply is certified to EN60950 with SELV outputs. Use of alternative power supply will invalidate any approval given to this device and may be dangerous. Hinweis: Benutzen Sie nur eine von Symbol Technologies genehmigte Stromversorgung mit einer Ausgangsleistung von 5.4 V (Gleichstrom) und mindestens 3 A. Die Stromversorgung ist nach EN60950 für die Verwendung in SELV-Stromkreisen zertifiziert. Bei Verwendung eines anderen Netzteils werden alle für das Gerät gewährten Genehmigungen außer Kraft gesetzt, und der Betrieb kann gefährlich sein.

Glossary

802.11/802.11abg

A radio protocol that may be used by the Symbol radio card.

Access Point

Access Point (AP) refers to Symbol's Ethernet Access Point. It is a piece of communications equipment that manages communications between the host computer system and one or more wireless terminals. An AP connects to a wired Ethernet LAN and acts as a bridge between the Ethernet wired network and IEEE 802.11 interoperable radio-equipped mobile units, such as a mobile computer. The AP allows a mobile user to roam freely through a facility while maintaining a seamless connection to the wired network.

AirBEAM® Manager

AirBEAM® Manager is a comprehensive wireless network management system that provides essential functions that are required to configure, monitor, upgrade and troubleshoot the wireless network and its components (including networked mobile computers). Some features include event notification, access point configuration, diagnostics, statistical reports, auto-discovery, wireless proxy agents and monitoring of access points and mobile units.

AirBEAM® Smart Client

AirBEAM® Smart Client is part of Symbol's AirBEAM® suite, which also includes AirBEAM® Safe and AirBEAM® Manager. The AirBEAM® Smart Client system uses the network accessible host server to store software files that are to be downloaded to the mobile computers. The AirBEAM® Smart Client provides the mobile computers with the "smarts" to request software from the host. It allows them to request, download and install software, as well as to upload files and status data. The AirBEAM® Smart Client uses the industry standard FTP or TFTP file transfer protocols to check the host system for updates, and if necessary, to transfer updated software. Most often, AirBEAM® Smart Client is used with wireless networks, but any TCP/IP connection can be used. For more information, refer to the AirBEAM® Smart Windows® CE Client Product Reference Guide (p/n 72-63060-xx).

AP

See **Access Point**.

Aperture

The opening in an optical system defined by a lens or baffle that establishes the field of view.

ASCII

American Standard Code for Information Interchange. A 7 bit-plus-parity code representing 128 letters, numerals, punctuation marks and control characters. It is a standard data transmission code in the U.S.

Autodiscrimination

The ability of an interface controller to determine the code type of a scanned bar code. After this determination is made, the information content is decoded.

Bar

The dark element in a printed bar code symbol.

Bar Code

A pattern of variable-width bars and spaces which represents numeric or alphanumeric data in machine-readable form. The general format of a bar code symbol consists of a leading margin, start character, data or message character, check character (if any), stop character, and trailing margin. Within this framework, each recognizable symbology uses its own unique format. See **Symbology**.

Bar Code Density

The number of characters represented per unit of measurement (e.g., characters per inch).

Bar Height

The dimension of a bar measured perpendicular to the bar width.

Bar Width

Thickness of a bar measured from the edge closest to the symbol start character to the trailing edge of the same bar.

Bit

Binary digit. One bit is the basic unit of binary information. Generally, eight consecutive bits compose one byte of data. The pattern of 0 and 1 values within the byte determines its meaning.

Bits per Second (bps)

Bits transmitted or received.

Bit

Binary digit. One bit is the basic unit of binary information. Generally, eight consecutive bits compose one byte of data. The pattern of 0 and 1 values within the byte determines its meaning.

bps

See **Bits Per Second**.

Byte	On an addressable boundary, eight adjacent binary digits (0 and 1) combined in a pattern to represent a specific character or numeric value. Bits are numbered from the right, 0 through 7, with bit 0 the low-order bit. One byte in memory is used to store one ASCII character.
boot or boot-up	The process a computer goes through when it starts. During boot-up, the computer can run self-diagnostic tests and configure hardware and software.
CDRH	Center for Devices and Radiological Health. A federal agency responsible for regulating laser product safety. This agency specifies various laser operation classes based on power output during operation.
CDRH Class 1	This is the lowest power CDRH laser classification. This class is considered intrinsically safe, even if all laser output were directed into the eye's pupil. There are no special operating procedures for this class.
CDRH Class 2	No additional software mechanisms are needed to conform to this limit. Laser operation in this class poses no danger for unintentional direct human exposure.
Character	A pattern of bars and spaces which either directly represents data or indicates a control function, such as a number, letter, punctuation mark, or communications control contained in a message.
Character Set	Those characters available for encoding in a particular bar code symbology.
Check Digit	A digit used to verify a correct symbol decode. The scanner inserts the decoded data into an arithmetic formula and checks that the resulting number matches the encoded check digit. Check digits are required for UPC but are optional for other symbologies. Using check digits decreases the chance of substitution errors when a symbol is decoded.
Codabar	A discrete self-checking code with a character set consisting of digits 0 to 9 and six additional characters: (- $: / , +).
Code 128	A high density symbology which allows the controller to encode all 128 ASCII characters without adding extra symbol elements.
Code 3 of 9 (Code 39)	A versatile and widely used alphanumeric bar code symbology with a set of 43 character types, including all uppercase letters, numerals from 0 to 9 and 7 special characters (- . / + % $ and space). The code name is derived from the fact that 3 of 9 elements representing a character are wide, while the remaining 6 are narrow.
Code 93	An industrial symbology compatible with Code 39 but offering a full character ASCII set and a higher coding density than Code 39.
Code Length	Number of data characters in a bar code between the start and stop characters, not including those characters.
Cold Boot	A cold boot restarts the mobile computer and erases all user stored records and entries.

COM port	Communication port; ports are identified by number, e.g., COM1, COM2.
Continuous Code	A bar code or symbol in which all spaces within the symbol are parts of characters. There are no intercharacter gaps in a continuous code. The absence of gaps allows for greater information density.
Cradle	A cradle is used for charging the terminal battery and for communicating with a host computer, and provides a storage place for the terminal when not in use.
Dead Zone	An area within a scanner's field of view, in which specular reflection may prevent a successful decode.
Decode	To recognize a bar code symbology (e.g., UPC/EAN) and then analyze the content of the specific bar code scanned.
Decode Algorithm	A decoding scheme that converts pulse widths into data representation of the letters or numbers encoded within a bar code symbol.
Decryption	Decryption is the decoding and unscrambling of received encrypted data. Also see, **Encryption** and **Key**.
Depth of Field	The range between minimum and maximum distances at which a scanner can read a symbol with a certain minimum element width.
Discrete Code	A bar code or symbol in which the spaces between characters (intercharacter gaps) are not part of the code.
Discrete 2 of 5	A binary bar code symbology representing each character by a group of five bars, two of which are wide. The location of wide bars in the group determines which character is encoded; spaces are insignificant. Only numeric characters (0 to 9) and START/STOP characters may be encoded.
EAN	European Article Number. This European/International version of the UPC provides its own coding format and symbology standards. Element dimensions are specified metrically. EAN is used primarily in retail.
Element	Generic term for a bar or space.
Encoded Area	Total linear dimension occupied by all characters of a code pattern, including start/stop characters and data.
ESD	Electro-Static Discharge
ESN	Electronic Serial Number. The unique hardware number associated with a cellular device, which is transmitted to the system when the device communicates with the cellular system.
Ethernet	Ethernet communication port. Allows a wired interface to a radio network.
Flash Memory	Flash memory is nonvolatile, semi-permanent storage that can be electronically erased in the circuit and reprogrammed. Mobile computers may use Flash memory to store the operating system (ROM-DOS), the terminal emulators, and the Citrix ICA Client for DOS.
FTP	See **File Transfer Protocol**.

Flash Memory
Flash memory is responsible for storing the system firmware and is non-volatile. If the system power is interrupted the data is not be lost.

Gateway Address
An IP address for a network gateway or router. A mobile computer may be part of a subnet as specified by its IP address and Netmask. It can send packets directly to any node on the same subnet. If the destination node is on a different subnet, then the terminal sends the packet to the gateway first. The gateway determines how to route the packet to the destination subnet. This field is an option used by networks that require gateways.

Hard Reset
See **Cold Boot**.

Hz
Hertz; A unit of frequency equal to one cycle per second.

Host Computer
A computer that serves other terminals in a network, providing such services as computation, database access, supervisory programs and network control.

IDE
Intelligent drive electronics. Refers to the solid-state hard drive type.

IEC
International Electrotechnical Commission. This international agency regulates laser safety by specifying various laser operation classes based on power output during operation.

IEC (825) Class 1
This is the lowest power IEC laser classification. Conformity is ensured through a software restriction of 120 seconds of laser operation within any 1000 second window and an automatic laser shutdown if the scanner's oscillating mirror fails.

Interleaved 2 of 5
A binary bar code symbology representing character pairs in groups of five bars and five interleaved spaces. Interleaving provides for greater information density. The location of wide elements (bar/spaces) within each group determines which characters are encoded. This continuous code type uses no intercharacter spaces. Only numeric (0 to 9) and START/STOP characters may be encoded.

imaging scanning
Mobile computers with an integrated imager use digital camera technology to take a digital picture of a bar code, store the resulting image in memory and execute state-of-the-art software decoding algorithms to extract the data from the image.

Intercharacter Gap
The space between two adjacent bar code characters in a discrete code.

Interleaved Bar Code
A bar code in which characters are paired together, using bars to represent the first character and the intervening spaces to represent the second.

Interleaved 2 of 5	A binary bar code symbology representing character pairs in groups of five bars and five interleaved spaces. Interleaving provides for greater information density. The location of wide elements (bar/spaces) within each group determines which characters are encoded. This continuous code type uses no intercharacter spaces. Only numeric (0 to 9) and START/STOP characters may be encoded.
Internet Protocol Address	See **IP**.
IP	Internet Protocol. The IP part of the TCP/IP communications protocol. IP implements the network layer (layer 3) of the protocol, which contains a network address and is used to route a message to a different network or subnetwork. IP accepts "packets" from the layer 4 transport protocol (TCP or UDP), adds its own header to it and delivers a "datagram" to the layer 2 data link protocol. It may also break the packet into fragments to support the maximum transmission unit (MTU) of the network.
IP Address	(Internet Protocol address) The address of a computer attached to an IP network. Every client and server station must have a unique IP address. A 32-bit address used by a computer on a IP network. Client workstations have either a permanent address or one that is dynamically assigned to them each session. IP addresses are written as four sets of numbers separated by periods; for example, 204.171.64.2.
LAN	Local area network. A radio network that supports data communication within a local area, such as within a warehouse of building.
laser scanner	A type of bar code reader that uses a beam of laser light.
LASER	Light Amplification by Stimulated Emission of Radiation.The laser is an intense light source. Light from a laser is all the same frequency, unlike the output of an incandescent bulb. Laser light is typically coherent and has a high energy density.
Laser Diode	A gallium-arsenide semiconductor type of laser connected to a power source to generate a laser beam. This laser type is a compact source of coherent light.
LED Indicator	A semiconductor diode (LED - Light Emitting Diode) used as an indicator, often in digital displays. The semiconductor uses applied voltage to produce light of a certain frequency determined by the semiconductor's particular chemical composition.
Light Emitting Diode	See **LED**.
MC	Mobile Computer.
MIL	1 mil = 1 thousandth of an inch.
MIN	Mobile Identification Number. The unique account number associated with a cellular device. It is broadcast by the cellular device when accessing the cellular system.
Misread (Misdecode)	A condition which occurs when the data output of a reader or interface controller does not agree with the data encoded within a bar code symbol.

Mobile Computer In this text, *mobile computer* refers to the Symbol portable computer. It can be set up to run as a stand-alone device, or it can be set up to communicate with a network, using wireless radio technology.

Nominal The exact (or ideal) intended value for a specified parameter. Tolerances are specified as positive and negative deviations from this value.

Nominal Size Standard size for a bar code symbol. Most UPC/EAN codes are used over a range of magnifications (e.g., from 0.80 to 2.00 of nominal).

NVM Non-Volatile Memory.

Parameter A variable that can have different values assigned to it.

PDT Portable Data Terminal.

Percent Decode The average probability that a single scan of a bar code would result in a successful decode. In a well-designed bar code scanning system, that probability should approach near 100%.

Quiet Zone A clear space, containing no dark marks, which precedes the start character of a bar code symbol and follows the stop character.

RAM Random Access Memory. Data in RAM can be accessed in random order, and quickly written and read.

Reflectance Amount of light returned from an illuminated surface.

Resolution The narrowest element dimension which is distinguished by a particular reading device or printed with a particular device or method.

RF Radio Frequency.

ROM Read-Only Memory. Data stored in ROM cannot be changed or removed.

ROM-DOS The name of the licensed Disk Operating System loaded into the terminal's flash file system.

Router A device that connects networks and supports the required protocols for packet filtering. Routers are typically used to extend the range of cabling and to organize the topology of a network into subnets. See **Subnet**.

RS232 An Electronic Industries Association (EIA) standard that defines the connector, connector pins, and signals used to transfer data serially from one device to another.

Scan Area Area intended to contain a symbol.

Scanner An electronic device used to scan bar code symbols and produce a digitized pattern that corresponds to the bars and spaces of the symbol. Its three main components are:

1. Light source (laser or photoelectric cell) - illuminates a bar code.
2. Photodetector - registers the difference in reflected light (more light reflected from spaces).
3. Signal conditioning circuit - transforms optical detector output into a digitized bar pattern.

Scanning Mode	The scanner is energized, programmed and ready to read a bar code.
Scanning Sequence	A method of programming or configuring parameters for a bar code reading system by scanning bar code menus.
SDK	Software Development Kit
Self-Checking Code	A symbology that uses a checking algorithm to detect encoding errors within the characters of a bar code symbol.
Shared Key	Shared Key authentication is an algorithm where both the AP and the MU share an authentication key.
SID	System Identification code. An identifier issued by the FCC for each market. It is also broadcast by the cellular carriers to allow cellular devices to distinguish between the home and roaming service.
SMDK	Symbol Mobility Developer's Kit.
Soft Reset	See **Warm Boot**.
Space	The lighter element of a bar code formed by the background between bars.
Specular Reflection	The mirror-like direct reflection of light from a surface, which can cause difficulty decoding a bar code.
Spring Radio Protocol	A radio protocol that may be used by the Symbol radio card. Symbol Radio cards that use the Spring protocol also have an Net ID.
Start/Stop Character	A pattern of bars and spaces that provides the scanner with start and stop reading instructions and scanning direction. The start and stop characters are normally to the left and right margins of a horizontal code.
STEP	Symbol Terminal Enabler Program.
Subnet	A subset of nodes on a network that are serviced by the same router. See **Router**.
Subnet Mask	A 32-bit number used to separate the network and host sections of an IP address. A custom subnet mask subdivides an IP network into smaller subsections. The mask is a binary pattern that is matched up with the IP address to turn part of the host ID address field into a field for subnets. Default is often 255.255.255.0.
Substrate	A foundation material on which a substance or image is placed.
SVTP	Symbol Virtual Terminal Program.
Symbol	A scannable unit that encodes data within the conventions of a certain symbology, usually including start/stop characters, quiet zones, data characters and check characters.
Symbol Aspect Ratio	The ratio of symbol height to symbol width.
Symbol Height	The distance between the outside edges of the quiet zones of the first row and the last row.

Symbol Length	Length of symbol measured from the beginning of the quiet zone (margin) adjacent to the start character to the end of the quiet zone (margin) adjacent to a stop character.
Symbology	The structural rules and conventions for representing data within a particular bar code type (e.g. UPC/EAN, Code 39, PDF417, etc.).
Tolerance	Allowable deviation from the nominal bar or space width.
UPC	Universal Product Code. A relatively complex numeric symbology. Each character consists of two bars and two spaces, each of which is any of four widths. The standard symbology for retail food packages in the United States.
Visible Laser Diode (VLD)	A solid state device which produces visible laser light.
WAN	Wide-Area Network. A radio network that supports data communication beyond a local area. That is, information can be sent across a city, state, or even nationwide.
Warm Boot	A warm boot restarts the mobile computer by closing all running programs. All data that is not saved to flash memory is lost.
Wireless Local Area Network (WLAN)	See **LAN**.
Wireless Wide Area Network (WWAN)	See **WAN**.
WNMP	(Wireless Network Management Protocol) This is Symbol's proprietary MAC layer protocol used for inter access point communication and other MAC layer communication.

Index

Numerics

28-key keypad 2-4, B-3
38-key keypad 2-6, B-3
48-key keypad 2-8, B-3
802.11 . . . . . A-4

A

accessories 1-3
cables 4-9
four slot charge only cradle 4-3, 4-6
LED indicators 4-7
four slot cradles
battery charging 4-6
four slot spare battery charger 4-3
battery charging 4-8
LED indicators 4-8
MC3000 communication/charge cables
battery charging 4-10
LED indicators 4-10
plastic holster 4-14, 4-16
SD card 4-13
single slot serial/USB cradle 4-3, 4-4
battery charging 4-4
LED indicators 4-5
stylus 1-3
UBC adapter 4-3
battery charging 4-11
LED indicators 4-12
active and indicate programs 2-11
active tasks 2-14
ActiveSync xv
Adaptive Frequency Hopping 3-3
AFH 3-3
aiming options
aiming pattern 2-19
attaching strap/door assembly 1-14, 1-15

B

backup battery specification A-3
battery
charging 1-9
temperature range A-3, A-4
install 1-6
removal 1-12
specification A-3
status 2-11
battery charge status 2-11
battery chargers
four slot spare battery charger
battery charging 4-8
LED indicators 4-8
MC3000 communication/charge cables
battery charging 4-10
LED indicators 4-10
UBC adapter
battery charging 4-11
LED indicators 4-12
battery charging 1-9
backup battery 1-9
four slot cradles 4-6
four slot spare battery charger 4-8

main battery 1-9
MC3000 communication/charge cables 4-10
battery charging 4-10
temperature range 1-9
UBC adapter 4-11
battery status 2-11
beeper 1-4
beeper volume 2-3
Bluetooth 3-3
ActiveSync 3-7
bonding 3-10
deleting bonded device 3-12
dial-up networking services 3-16
disable 3-4
discovering devices 3-8
discovering services 3-13
enable 3-5
file transfer services 3-14
OBEX object push services 3-18
personal area network services 3-21
renaming bonded device 3-11
turning off 3-4
turning on 3-5
wizard mode 3-5
bluetooth
adaptive frequency hopping 3-3
icon 2-11, 2-12
Bluetooth security 3-3
bonding, Bluetooth 3-10
boot
cold 3-5
warm 3-5
bullets xv

C

cables 4-3
calibration screen 1-11
characters, special B-4
charge battery 1-9
charge LED indicator 1-4, 1-6
charging
spare batteries 1-10
temperature range A-3, A-4
charging battery 1-9
charging, temperature range 1-9
cleaning 5-3
clock, display 2-14
cold boot 2-23, 3-5
communication status 2-11
contrast settings 2-3
conventions
notational xv
cradles
four slot charge only cradle 4-3, 4-6
LED indicators 4-7
four slot cradles
battery charging 4-6
single slot serial/USB cradle 4-3
battery charging 4-4
LED indicators 4-5
troubleshooting 5-8

D

data backup 1-9
data capture specifications A-4
DCP . . . . . xv, 1-3
decode ranges 2-17, 2-20
deleting Bluetooth bond 3-12
demo window 1-11, 1-12, 2-10
desktop window 2-10
device configuration package 1-3
Device Configuration Package, see DCP
dimensions A-3
directory structure 2-24
display clock 2-14
display contrast 2-3
display specification A-3
documentation updates xv
documents 2-12

E

electro-static discharge
end task 2-14
entering data with scanner 2-16
entering information 2-15
scanning 2-16
ESD 4-13, A-3

F

fabric holster 1-3, 4-16
favorites 2-12
file folders 2-24
file system directory structure 2-24
four slot charge only cradle 1-3, 4-3, 4-6
LED indicators 4-7
four slot cradles 1-9
battery charging 4-6
four slot Ethernet cradle 1-3
four slot spare battery charger 1-3, 1-9, 1-10
battery charging 4-8
LED indicators 4-8
troubleshooting 5-8
frequency-hopping spread spectrum 3-3
function status 2-11

H

hard reset 2-23, 3-5
headset jack 1-5
help 2-12
holster, fabric 1-3, 4-16
holster, plastic 1-3, 4-14
humidity A-3

I

icons
bluetooth 2-11, 2-12
Imager
image capture 2-19
imager 2-19
aiming 2-19
decode mode 2-19
function 2-19
operational modes 2-19
imager decode ranges 2-22
imager scanning 2-19
indicator LED bar 1-4, 1-6, 4-4
Industry Scientific and Medical 3-3
information, service xvi
internet
wireless connection 2-25
internet connection 2-25

K

keypad
28-key 2-3, 2-4, B-3
38-key 2-3, 2-6, B-3
48-key 2-3, 2-8, B-3
keypad configurations 2-3
keypad functions B-3
keypad special functions 2-3

L

laser decode ranges 2-18
laser scanning 2-16

M

main battery 1-9
charging 1-6
temperature range A-3, A-4
inserting 1-6
main battery removal 1-12
maintenance 5-3
MC3000 communication/charge cables 4-9
battery charging 4-10
LED indicators 4-10
MC3000-K parts 1-4, 1-5
MC3000-R parts 1-4, 1-5
microphone 1-4
mobile computer
cold boot 2-23
hard reset 2-23
power on 2-3
reset 2-23
scanning 2-16
soft reset 2-23
warm boot 2-23
Monarch printer cable 1-3, 4-9

N

navigating software 2-3

O

operating
environment A-3
platforms A-3
temperature A-3
OS A-3
O'Neil printer cable 1-3, 4-9

P

pair with a remote device 3-7
parts 1-4, 1-5, 1-6
PDF417
slab raster option 2-19
smart raster 2-19
plastic holster 1-3, 4-14
platform SDK xv
power button 2-3
power supply 1-3
power supply regulatory compliance B-3
processor/memory specifications A-4
program menu 2-13
properties 2-14

R

radio module specifications A-4
receiver 1-4
receiver volume 2-3
regulatory compliance, power supply B-3
remove battery 1-12
remove the Strap/Door Assembly 1-14, 1-15
renaming Bluetooth bond 3-11
replace the strap/door assembly 1-14, 1-15
reset
hard 3-5
soft 3-5
resetting 2-23
resume 3-5
rotating scan head 1-4
rotating scan turret 1-5
RS232 charge cable 1-3, 1-9, 4-9
run 2-12

S

scan 2-16
scan buttons 1-4, 1-6
scan LED indicators 1-4, 1-6, 2-17
scan status 2-17
scan window 1-5
scanning 2-16
adjusting the distance 2-16
angle 2-17
indicator 2-17
LED indicators 2-17

range 2-17
scanning considerations 2-17
screen
calibration 1-11
contrast 2-3
specifications A-3
SD card 4-13
installation 4-13
specifications A-4
sealing specification A-3
secure device card 4-13
serial charge cable 1-9, 4-9
series 3000 demo window 2-10
service 5-3
service information xvi
settings 2-12
shoulder strap 4-16, 4-17
show clock 2-14
single slot cradle RS232 cable 1-3
single slot cradle USB cable 1-3
single slot serial/USB cradle . . . 1-3, 1-9, 1-10, 4-3, 4-4
battery charging 4-4
LED indicators 4-5
soft reset 2-23, 3-5
spare battery
charging 1-10
special characters B-4
special functions, keypad 2-3
specifications A-1
start menu 2-12
starting the mobile computer 1-6, 1-11
startup 1-6
status icon 2-11
StoneStreet One 3-3
storage temperature A-3
storing 5-3
strap/door assembly 1-5
attaching 1-14, 1-15
strap/door assembly removal 1-14, 1-15
stylus 1-3, 1-5, 1-10
stylus holder 1-5
suspend 1-12, 1-14, 1-15, 2-13, 3-5
Symbol Mobility Developer Kit 1-3
Symbol Mobility Developer Kit for .NET, see SMDK
Symbol support center xvi

T

task manager 2-14
taskbar 2-11
technical specifications A-3
temperature
battery charging A-3, A-4
operating A-3
storage A-3
troubleshooting 5-4
cables 5-9
four slot charge only cradle 5-7
four slot spare battery charger 5-8
mobile computer 5-4
single slot serial/USB cradle 5-6
UBC adapter 5-8

U

UBC adapter 1-3, 1-9, 1-10, 4-3
battery charging 4-11
LED indicators 4-12
UBC adapter
LED indicators 4-12
UBC adapter LED charge indications 4-12
universal battery charger adapter 1-3, 1-9
unpacking 1-2
updates, documentation xv
USB client charge cable 1-3, 1-9, 4-9
using stylus 1-10

V

volume 2-3

W

wakeup condition settings 1-12
wakeup conditions 2-24
warm boot 2-23, 3-5
weight A-3
Windows CE .NET 5.0 Core 2-10, 2-13
Windows CE .NET 5.0 Professional 2-10, 2-13
wireless
internet 2-25
wireless application 2-25
wireless applications 2-25
WLAN A-4

Z

Zebra printer cable 1-3, 4-9

Tell Us What You Think...

We'd like to know what you think about this Manual. Please take a moment to fill out this questionnaire and fax this form to: (631) 738-3318, or mail to:

Symbol Technologies, Inc.
One Symbol Plaza M/S B-4
Holtsville, NY 11742-1300
Attention: Technical Publications Manager

IMPORTANT: If you need product support, please call the appropriate customer support number provided. Unfortunately, we cannot provide customer support at the fax number above.

Manual Title:_____
(please include revision level)

How familiar were you with this product before using this manual?

☐ Very familiar ☐ Slightly familiar ☐ Not at all familiar

Did this manual meet your needs? If not, please explain.

_____

_____

What topics need to be added to the index, if applicable?

_____

_____

What topics do you feel need to be better discussed? Please be specific.

_____

_____

What can we do to further improve our manuals?

_____

_____

Thank you for your input—We value your comments.

Symbol Technologies, Inc.
One Symbol Plaza
Holtsville, New York 11742-1300
http://www.symbol.com

72E-68899-02
Revision A - October 2005