MC75A Enterprise Digital Assistant

User Guide

DRAFT

DRAFT

MC75A Enterprise Digital Assistant User Guide

72E-133503-01
Rev. A
February 2010

DRAFT

© 2010 by Motorola, Inc. All rights reserved.

No part of this publication may be reproduced or used in any form, or by any electrical or mechanical means, without permission in writing from Motorola. This includes electronic or mechanical means, such as photocopying, recording, or information storage and retrieval systems. The material in this manual is subject to change without notice.

The software is provided strictly on an “as is” basis. All software, including firmware, furnished to the user is on a licensed basis. Motorola grants to the user a non-transferable and non-exclusive license to use each software or firmware program delivered hereunder (licensed program). Except as noted below, such license may not be assigned, sublicensed, or otherwise transferred by the user without prior written consent of Motorola. No right to copy a licensed program in whole or in part is granted, except as permitted under copyright law. The user shall not modify, merge, or incorporate any form or portion of a licensed program with other program material, create a derivative work from a licensed program, or use a licensed program in a network without written permission from Motorola. The user agrees to maintain Motorola’s copyright notice on the licensed programs delivered hereunder, and to include the same on any authorized copies it makes, in whole or in part. The user agrees not to decompile, disassemble, decode, or reverse engineer any licensed program delivered to the user or any portion thereof.

Motorola reserves the right to make changes to any software or product to improve reliability, function, or design.

Motorola does not assume any product liability arising out of, or in connection with, the application or use of any product, circuit, or application described herein.

No license is granted, either expressly or by implication, estoppel, or otherwise under any Motorola, Inc., intellectual property rights. An implied license only exists for equipment, circuits, and subsystems contained in Motorola products.

MOTOROLA and the Stylized M Logo and Symbol and the Symbol logo are registered in the US Patent & Trademark Office. Bluetooth is a registered trademark of Bluetooth SIG. Microsoft, Windows and ActiveSync are either registered trademarks or trademarks of Microsoft Corporation. All other product or service names are the property of their respective owners.

Motorola, Inc.
One Motorola Plaza
Holtsville, New York 11742-1300
http://www.motorola.com/enterprisemobility

Patents

This product is covered by one or more of the patents listed on the website: http://www.motorola.com/enterprisemobility/patents.

DRAFT

Revision History

Changes to the original manual are listed below:

Change	Date	Description
-01 Rev. A	02/2010	Initial release.

DRAFT

DRAFT

Table of Contents

Patents ii
Revision History iii

About This Guide
Introduction xiii
Documentation Set xiii
Configurations xiv
Software Versions xiv
Chapter Descriptions xvi
Notational Conventions xvii
Related Documents xvii
Service Information xviii

Chapter 1: Getting Started
Introduction 1-1
Unpacking 1-2
Getting Started 1-2
Installing the SIM Card 1-3
Installing the Main Battery 1-4
Charging the Battery 1-5
Charging the Main Battery and Memory Backup Battery 1-5
Charging Spare Batteries 1-7
Charging Temperature 1-7
Powering On the MC75A 1-7
Calibrating the Screen 1-7
Checking Battery Status 1-8
Micro Secure Digital (microSD) Card 1-8
Adjusting the Handstrap 1-9
Replacing the Main Battery 1-9
Changing the Power Settings 1-11
Changing the Backlight Settings 1-11
Changing the Keypad Backlight Settings 1-11
Turning Off the Radios 1-12

DRAFT

Chapter 2: Using the MC75A

Introduction 2-1
Home Screen 2-1
Status Bar 2-2
Today Screen 2-4
Classic Today Screen 2-5
Soft Keys Bar 2-6
Start Screen 2-7
Adjusting Volume 2-12
Battery Status Indications 2-13
Battery Reserve Options 2-13
Main Battery Temperature Notifications 2-14
LED Indicators 2-15
Resetting the MC75A 2-17
Performing a Warm Boot 2-17
Performing a Cold Boot 2-17
Waking the MC75A 2-18
Locking the MC75A 2-18
Password Locking 2-19
Function Buttons 2-20
Stylus 2-21
Entering Data 2-22
Power Management 2-23
Display Orientation 2-23
Free Fall Detection 2-24
Taking Photos 2-24
Recording Video 2-24
Viewing Photos and Videos 2-25
Using IrDA 2-25
Infrared Connection 2-26
Exchanging Files using IR Connection 2-26

Chapter 3: Data Capture

Introduction 3-1
Laser Scanning 3-1
Scanning Considerations 3-1
Bar Code Scanning 3-2
Imaging 3-2
Operational Modes 3-3
Imager Scanning 3-3
Color Digital Camera 3-4
Digital Camera Scanning 3-4

Chapter 4: Using the Phone

Introduction 4-1
Accessing the Phone Keypad 4-1
Turning the Phone On and Off 4-2
Using a Wired Headset 4-3

DRAFT

Using a Bluetooth Headset 4-4
Adjusting Audio Volume 4-4
Making a Call 4-5
Using the Phone Dialer 4-5
Using Contacts 4-5
Using Call History 4-6
Making a Speed Dial Call 4-6
Making an Emergency Call 4-7
Answering a Call 4-7
Incoming Call Features 4-8
Smart Dialing 4-8
Muting a Call 4-9
Taking Notes 4-10
Using Speed Dial 4-11
Adding a Speed Dial Entry 4-11
Editing a Speed Dial Entry 4-13
Deleting a Speed Dial Entry 4-13
Using Call History 4-14
Managing Call History 4-14
Changing the Call History View 4-14
Resetting the Recent Calls Counter 4-14
Deleting All Call History Items 4-15
Viewing Call Status 4-16
Using the Call History Menu 4-17
Swapping Calls on an MC75A6 4-17
Swapping Calls on an MC75A8 4-18
Conference Calling on an MC75A6 4-19
Three-way Calling on an MC75A8 4-21
Text Messaging 4-21
Viewing Text Messages 4-21
Sending a Text Message 4-23
Using a Dual Line SIM 4-24

Chapter 5: Using GPS Navigation
Introduction 5-1
Software Installation 5-1
MC75A GPS Setup 5-1
Operation 5-2
GPS Maps on microSD Cards 5-2
Answering a Phone Call While Using GPS 5-2
Losing the GPS Signal While in a Vehicle 5-2
Assisted GPS 5-2

Chapter 6: Using Bluetooth
Introduction 6-1
Adaptive Frequency Hopping 6-1
Security 6-2
Bluetooth Power States 6-3

DRAFT

Cold Boot 6-3
Warm Boot 6-4
Suspend 6-4
Resume 6-4
Using Microsoft Bluetooth Stack 6-4
Turning the Bluetooth Radio Mode On and Off 6-4
Enabling Bluetooth 6-4
Disabling Bluetooth 6-5
Discovering Bluetooth Device(s) 6-5
Available Services 6-8
Object Push Services via Beam 6-8
Internet Sharing 6-9
Hands-free Services 6-10
Serial Port Services 6-11
ActiveSync Using Serial Port Services 6-12
Phone Book Access Profile Services 6-13
Dial-Up Networking Services 6-14
Connect to a HID Device 6-14
A2DP/AVRCP Services 6-14
Turning the Bluetooth Radio Mode On and Off 6-16
Disabling Bluetooth 6-16
Enabling Bluetooth 6-16
Modes 6-16
Wizard Mode 6-16
Explorer Mode 6-16
Discovering Bluetooth Device(s) 6-17
Available Services 6-20
File Transfer Services 6-20
Connecting to the Internet Using an Access Point 6-22
Dial-Up Networking Services 6-22
Object Exchange Push Services 6-23
Headset Services 6-27
Hands-free Services 6-28
Serial Port Services 6-28
ActiveSync Using Serial Port Services 6-29
Personal Area Network Services 6-30
IrMC Synchronization Services 6-30
A2DP/AVRCP Services 6-30
Connect to a HID Device 6-31
Bonding with Discovered Device(s) 6-32
Bluetooth Settings 6-34
Device Info Tab 6-34
Services Tab 6-34
Security Tab 6-42
Discovery Tab 6-43
Virtual COM Port Tab 6-43
HID Tab 6-44
Profiles Tab 6-45
System Parameters Tab 6-46
Miscellaneous Tab 6-46

DRAFT

Chapter 7: Accessories

Introduction 7-1
Single Slot USB/Serial Cradle 7-2
Charging the MC75A Battery 7-3
Charging the Spare Battery 7-3
Battery Charging Indicators 7-4
Charging Temperature 7-4
Charging 7-5
Battery Charging Indicators 7-5
Charging Temperature 7-6
Charging 7-7
Battery Charging Indicators 7-7
Charging Temperature 7-7
Charging the MC75A Battery 7-9
Removing the MC75A 7-10
Charging the Spare Battery 7-10
Battery Charging Indicators 7-11
Charging Temperature 7-11
MC75A Battery Shim Installation 7-12
Spare Battery Charging 7-12
Battery Charging Indicators 7-13
Charging Temperature 7-13
Attaching and Removing the MSR 7-14
Using the MSR 7-14
Getting Started 7-16
Installation 7-16
Removal 7-16
Credit Card Transactions 7-17
Debit Card Transactions 7-17
Keypad 7-18
Display Messages 7-19
Check the DCR Battery Level 7-19
Installation 7-21
Removal 7-21
Credit Card Transactions 7-22
Debit Card Transactions 7-22
Chip and PIN Transactions 7-23
Keypad 7-23
Display Messages 7-24
Battery Charging and Operating Power 7-27
LED Charge Indications 7-28
Charging Temperature 7-28

Chapter 8: Maintenance & Troubleshooting

Introduction 8-1
Maintaining the MC75A 8-1
Removing the Screen Protector 8-2
Battery Safety Guidelines 8-2
Cleaning 8-3

DRAFT

Materials Required 8-3
Cleaning the MC75A 8-3
Housing 8-3
Display 8-4
Scanner Exit Window 8-4
Connector 8-4
Cleaning Cradle Connectors 8-4
Cleaning Frequency 8-5
Troubleshooting 8-5
MC75A 8-5
Bluetooth Connection 8-7
Single Slot USB/Serial Cradle 8-8
Four Slot Ethernet Cradle 8-10
Vehicle Cradle 8-10
Four Slot Battery Charger 8-11
Cables 8-12
Magnetic Stripe Reader 8-12

Appendix A: Technical Specifications
MC75A Technical Specifications A-1
MC75A A-1
Single Slot USB/Serial Cradle A-6
Four Slot Ethernet Cradle A-6
Four Slot Charge Only Cradle A-7
Four Slot Battery Charger A-7
Magnetic Stripe Reader A-8

Appendix B: Keypads
Introduction B-1
Numeric Keypad Configuration B-1
DSD Keypad Configuration B-5
Alpha-numeric Keypad Configurations B-8
Special Character Key B-15

Appendix C: Voice Quality Manager
Introduction C-1
Features C-1
Enabling VQM C-1
Audio Modes C-2
Changing Audio Modes C-2
Voice Packet Prioritization C-4
Acoustic Echo Cancellation C-4
Limitations C-4
Disabling VQM C-4

Glossary

DRAFT

Index

DRAFT

DRAFT

About This Guide

Introduction

This guide provides information about using the MC75A Enterprise Digital Assistant (EDA) and accessories.

NOTE Screens and windows pictured in this guide are samples and can differ from actual screens.

Documentation Set

The documentation set for the MC75A provides information for specific user needs, and includes:

- **MC75A Quick Start Guide** - describes how to get the MC75A EDA up and running.
- **MC75A Enterprise Digital Assistant User Guide** - describes how to use the MC75A EDA.
- **MC75A Enterprise Digital Assistant Integrator Guide** - describes how to set up the MC75A EDA and accessories.
- **Microsoft® Windows Mobile 6.0 Applications User Guide for Enterprise Mobility Devices** - describes how to use Microsoft developed applications.
- **Enterprise Mobility Application Guide** - describes how to use Enterprise Mobility developed sample applications.
- **Enterprise Mobility Developer Kit (EMDK) Help File** - provides API information for writing applications.

DRAFT

Configurations

This guide covers the following configurations:

Configuration	Radios	Display	Memory	Data Capture	Operating System	Keypads
MC75A0	WPAN: Bluetooth WLAN: 802.11a/b/g	3.5” VGA Color	256 MB RAM/ 1 GB Flash	1D laser scanner, 2D imager or camera	Windows Mobile 6.5 Classic	Numeric or Alphanumeric keypad
MC75A6	WPAN: Bluetooth WLAN: 802.11a/b/g WWAN: HSDPA GPS: SiRF III	3.5” VGA Color	256 MB RAM/ 1 GB Flash	1D laser scanner, 2D imager or camera	Windows Mobile 6.5 Professional	Numeric, DSD or Alphanumeric keypad
MC75A8	WPAN: Bluetooth WLAN: 802.11a/b/g WWAN: EVDO GPS: SiRF III	3.5” VGA Color	256 MB RAM/ 1 GB Flash	1D laser scanner, 2D imager or camera	Windows Mobile 6.5 Professional	Numeric, DSD or Alphanumeric keypad

Software Versions

This guide covers various software configurations and references are made to operating system or software versions for:

- Adaptation Kit Update (AKU) version
- OEM version
- Phone version
- BTExplorer version
- Fusion version
- Phone version.

AKU Version

To determine the Adaptation Kit Update (AKU) version:

Tap **Start** > **Settings** > **System** folder > **About** icon > **Version** tab.

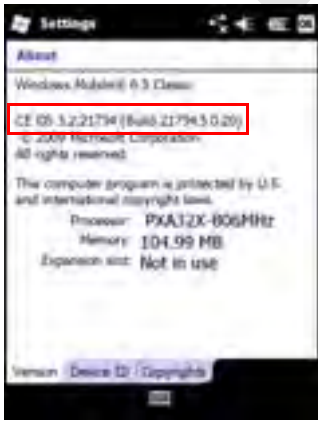

DRAFT

The second line lists the operating system version and the build number. The last part of the build number represents the AKU number. For example, *Build 18552.0.7.5* indicates that the device is running AKU version *0.7.5*.

OEM Version

To determine the OEM software version:

Tap **Start** > **Settings** > **System** folder > **System Info** icon > **System** tab.

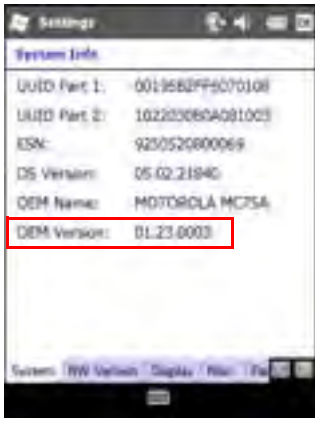

BTExplorer Software

NOTE To view the BTExplorer version information, the StoneStreet One Bluetooth stack must be enabled. Refer to the *MC75A Enterprise Digital Assistant Integrator Guide* for more information.

To determine the BTExplorer software version:

Tap **Start** > **BTExplorer** icon > **Show BTExplorer**> **Menu** > **About**.

Fusion Software

To determine the Fusion software version:

Tap **Start** > **Wireless Companion** icon > **Wireless Status** icon > **Versions**.

DRAFT

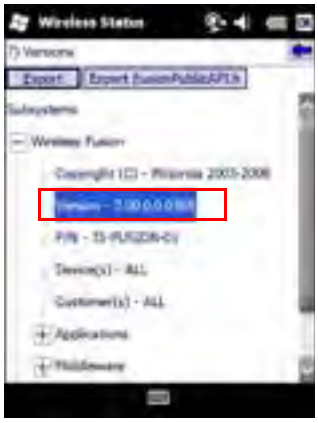

Phone Software

To determine the Phone software version:

Tap **Start** > **Phone** > **Menu** > **Options** > **Phone Info** or **Version Information** tab.

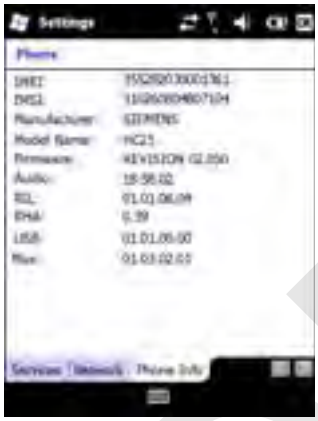

MC75A6

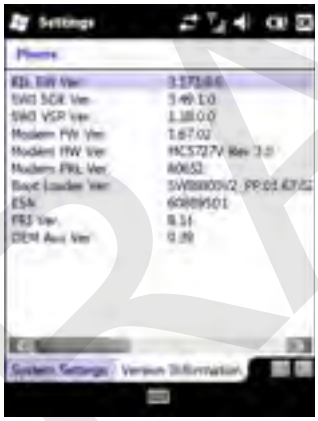

MC75A8

Chapter Descriptions

Topics covered in this guide are as follows:

- *Chapter 1, Getting Started* provides information on getting the MC75A up and running for the first time.
- Chapter 2, Using the MC75A provides basic instructions for using the MC75A, including powering on and resetting the MC75A, and entering and capturing data.
- *Chapter 3, Data Capture* provides information for using the MC75A to capture data using the laser scanner, imager or camera.
- *Chapter 4, Using the Phone* provides basic instructions for using the MC75A phone.
- *Chapter 5, Using GPS Navigation* provides information about GPS navigation with the MC75A.
- *Chapter 6, Using Bluetooth* explains Bluetooth functionality on the MC75A.
- *Chapter 7, Accessories* describes the available accessories and how to use them with the MC75A.

DRAFT

- *Chapter 8, Maintenance & Troubleshooting* includes instructions on cleaning and storing the MC75A, and provides troubleshooting solutions for potential problems during MC75A operation.
- *Appendix A, Technical Specifications* provides the technical specifications for the MC75A.
- *Appendix B, Keypads* provides keypad layouts and operation.
- *Appendix C, Voice Quality Manager* provides inflammation on using the Voice Quality Manager software.

Notational Conventions

The following conventions are used in this document:

- "EDA" refers to the Motorola MC75A series of mobile computers.
- *Italics* are used to highlight the following:
  - Chapters and sections in this and related documents
  - Icons on a screen.
- **Bold** text is used to highlight the following:
  - Dialog box, window, and screen names
  - Drop-down list and list box names
  - Check box and radio button names
  - Key names on a keypad
  - Button names on a screen.
- Bullets (•) indicate:
  - Action items
  - Lists of alternatives
  - Lists of required steps that are not necessarily sequential
- Sequential lists (e.g., those that describe step-by-step procedures) appear as numbered lists.

Related Documents

- *MC75A Quick Start Guide*, p/n 72-127677-xx.
- *MC75A Windows Mobile 6 Regulatory Guide*, p/n 72-130201-xx.
- *MC75A Enterprise Digital Assistant Integrator Guide*, p/n 72E-133624-xx.
- *Microsoft® Applications for Mobile 6 User Guide*, p/n 72E-108299-xx
- *Enterprise Mobility Application Guide*, p/n 72E-68901-xx
- *Enterprise Mobility Developer Kits (EMDKs),* available at: http://www.motorola.com/enterprisemobility/support.
- Latest ActiveSync software, available at: http://www.microsoft.com.

For the latest version of this guide and all guides, go to: http://www.motorola.com/enterprisemobility/manuals.

DRAFT

Service Information

If you have a problem with your equipment, contact Motorola Enterprise Mobility support for your region. Contact information is available at: http://www.motorola.com/enterprisemobility/contactsupport.

When contacting Enterprise Mobility support, please have the following information available:

- Serial number of the unit
- Model number or product name
- Software type and version number

Motorola responds to calls by email, telephone or fax within the time limits set forth in support agreements.

If your problem cannot be solved by Motorola Enterprise Mobility Support, you may need to return your equipment for servicing and will be given specific directions. Motorola is not responsible for any damages incurred during shipment if the approved shipping container is not used. Shipping the units improperly can possibly void the warranty.

If you purchased your Enterprise Mobility business product from a Motorola business partner, contact that business partner for support.

DRAFT

Chapter 1 Getting Started

Introduction

This chapter lists the parts and accessories for the MC75A and explains how to install and charge the batteries, replace the strap, and power on the MC75A for the first time.

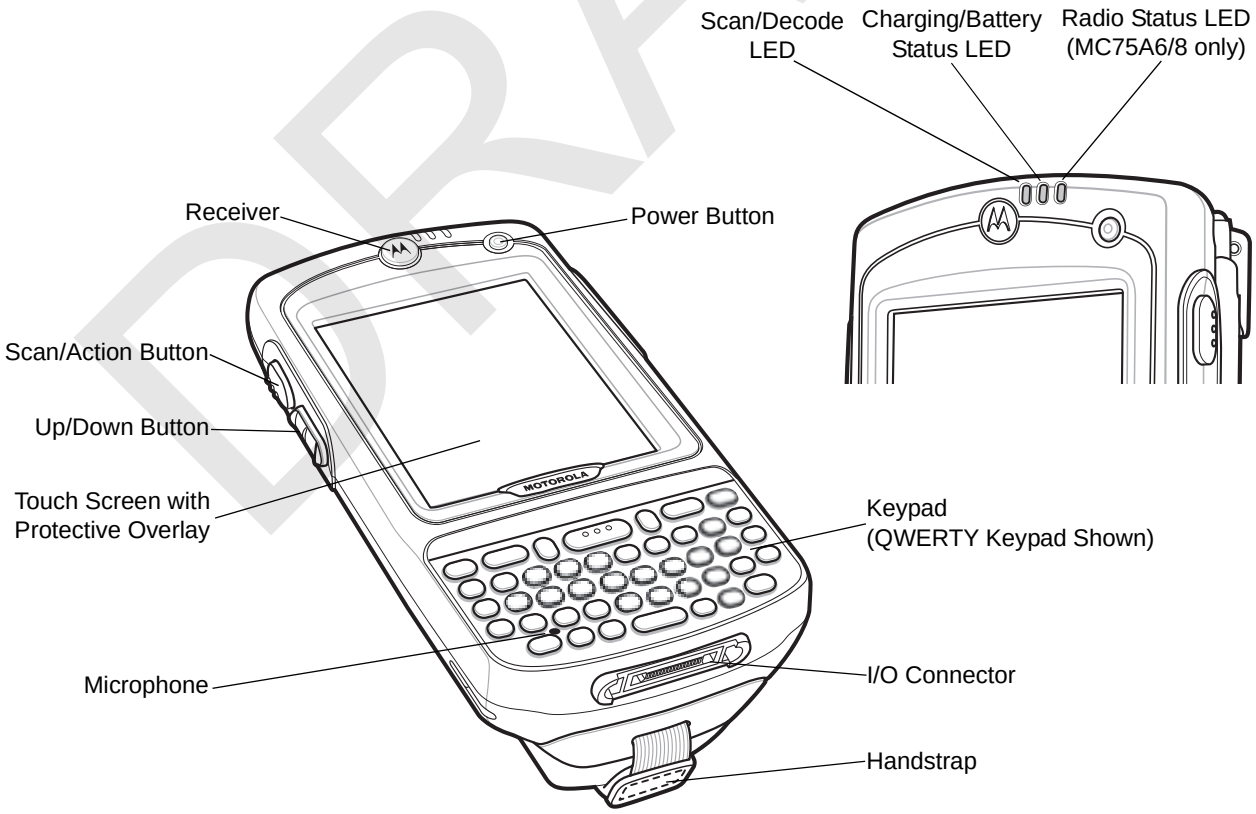

Figure 1-1 *MC75A Front View*

DRAFT

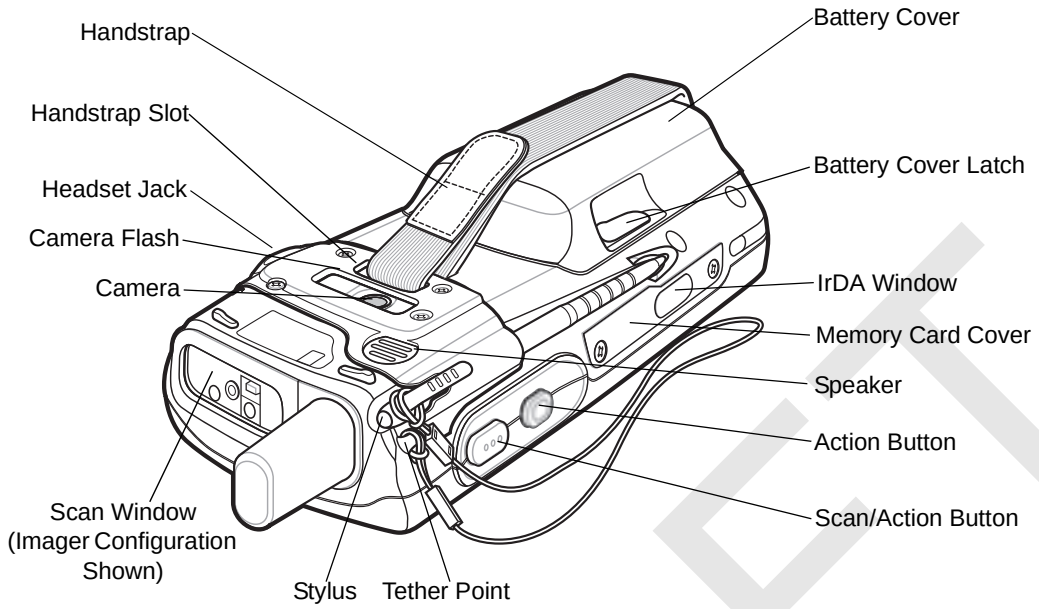

Figure 1-2 *MC75A Rear View*

Unpacking

Carefully remove all protective material from the MC75A and save the shipping container for later storage and shipping.

Verify that you received the following:

- MC75A EDA
- Lithium-ion battery
- Battery cover/strap assembly
- Tethered stylus
- Protective overlay, installed on display window
- Regulatory Guide
- Quick Start Guide.

Inspect the equipment for damage. If any equipment is missing or damaged, contact the Motorola Enterprise Mobility Support center immediately. See *page xviii* for contact information.

Getting Started

To start using the MC75A for the first time:

- Install the SIM card (MC75A6 only)
- Install the main battery.
- Charge the MC75A.

DRAFT

- Power on the MC75A.
- Configure the MC75A.

Installing the SIM Card

NOTE MC75A6 configurations only.

GSM phone service requires a Subscriber Identification Module (SIM) card, or smart card. Obtain this card from the your service provider. The card fits into the MC75A and can contain the following information:

- Mobile phone service provider account details.
- Information regarding service access and preferences.
- Contact information, which can be moved to **Contacts** on the MC75A.
- Any additional services to which you have subscribed.

NOTE For more information about SIM cards, refer to the service provider's documentation.

To install the SIM card:

1. Slide the SIM cover to unlock.
2. Lift the SIM cover using the stylus tip.

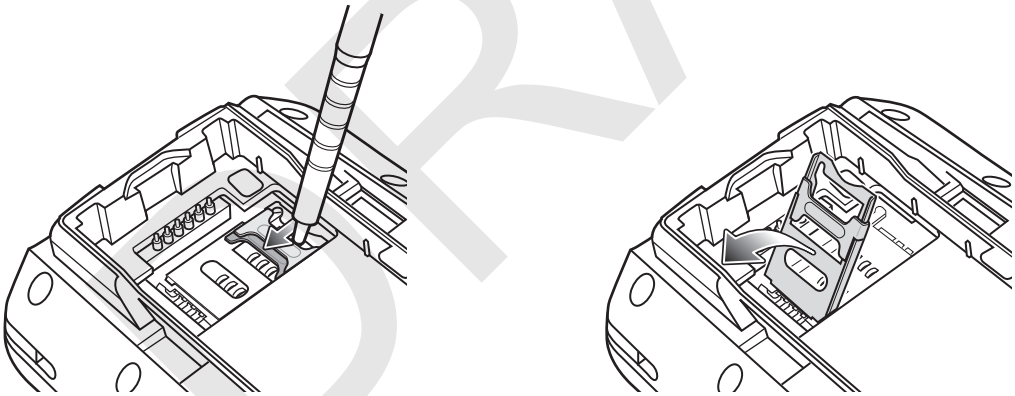

Figure 1-3 *Lifting the SIM Cover*

3. Insert the SIM card, as shown in *Figure 1-4*, with the cut edge of the card facing out and the contacts facing down.

DRAFT

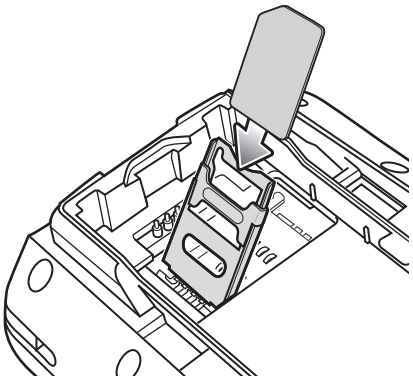

Figure 1-4 *Inserting the SIM Card*

4. Lower the SIM cover and using the stylus tip, slide it in place.
5. Install the battery. See *Installing the Main Battery on page 1-4* for more information.
6. After completing initial MC75A setup or after replacing a SIM card:
   a. Press the red **Power** button.
   b. On the Today screen, tap the Antenna icon and select **Wireless Manager** in the dialog box.
   c. Ensure **Phone** is on.
   d. Press the red **Power** button to suspend the MC75A.
   e. Perform a warm boot. See *Resetting the MC75A on page 2-17*.
   f. Make a call to verify cellular connection.

NOTE For detailed information about WWAN activation and settings, refer to the *MC75A Integrator Guide*.

Installing the Main Battery

NOTE The MC75A ships with either a 1950 mAh or a 3600 mAh battery. An optional 4800 mAh battery is available.

To install the main battery:

1. Insert the battery, top first, into the battery compartment in the back of the MC75A.

NOTE Position the battery correctly, with the battery charging contacts on top of the charging contacts in the battery compartment.

2. Press the battery down into the battery compartment until the battery release latch snaps into place.

DRAFT

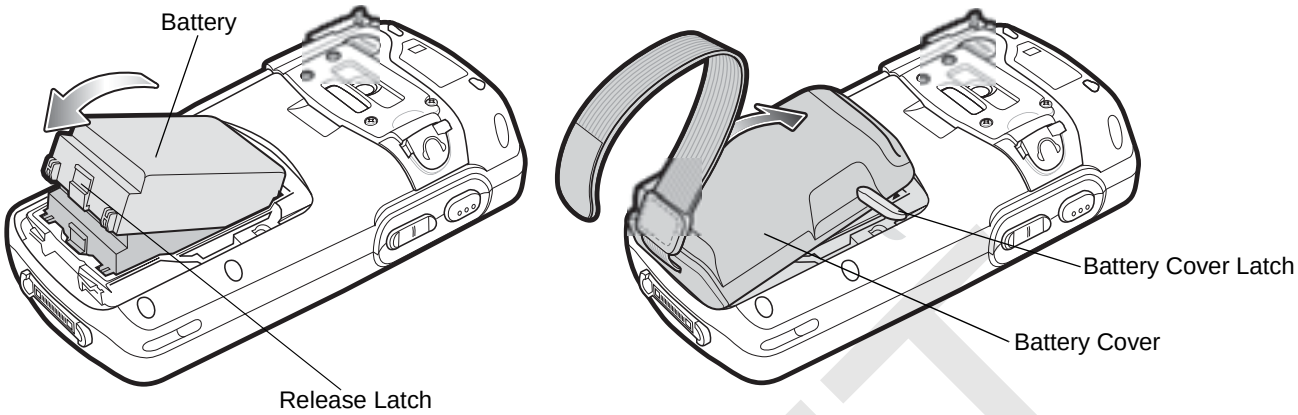

Figure 1-5 *Inserting the Battery*

3. With the battery cover latches open, insert the cover, bottom first, then press down on the top of the cover.
4. Close the battery cover latches on either side of the battery cover.
5. Insert the handstrap through the handstrap slot, then tighten and press down to secure.

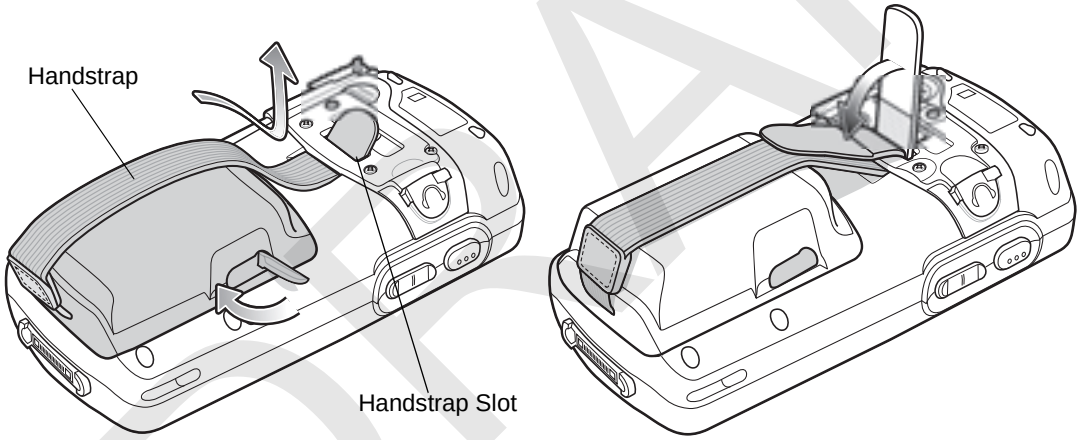

Figure 1-6 *Inserting the Handstrap*

The MC75A powers up after inserting the battery and replacing the battery cover.

Charging the Battery

CAUTION Ensure that you follow the guidelines for battery safety described in *Battery Safety Guidelines on page 8-2*.

Charging the Main Battery and Memory Backup Battery

Before using the MC75A for the first time, charge the main battery until the amber Charging/Battery Status LED remains lit (see *Table 1-2 on page 1-7* for charge status indications). To charge the MC75A, use a cable or a cradle with the appropriate power supply. For information about the accessories available for the MC75A, see *Chapter 7, Accessories*.

DRAFT

The MC75A is equipped with a memory backup battery which automatically charges from the fully-charged main battery. When using the MC75A for the first time, the backup battery requires approximately 36 hours to fully charge. This is also true any time the backup battery is discharged, which occurs when the main battery is removed for several hours. The backup battery retains RAM data in memory for at least 15 minutes (at room temperature) when the MC75A's main battery is removed. When the MC75A reaches a very low battery state, the combination of main battery and backup battery retains RAM data in memory for at least 48 hours.

To charge the main battery, use either a charging cable or a cradle. For cable and cradle setup and charging procedures refer to the *MC75A Integrator Guide*.

- Single Slot USB/Serial Cradle
- Four Slot Ethernet Cradle
- Four Slot Charge Only Cradle
- Vehicle Cradle.

To charge the main battery:

1. Connect the charging accessory to the appropriate power source.
2. Insert the MC75A into a cradle or attach to a cable. The MC75A begins charging. The Charging/Battery Status LED blinks amber while charging, then turns solid amber when fully charged. See *Table 1-2* for charging indications.

Table 1-1 lists the charge times for each available battery:

Table 1-1 *Battery Charge Times*

Battery Size	Charge Time
1950 mAh	Changes in less than four hours.
3600 mAh	Changes in less than eight hours.
4800 mAh	Changes in less than ten hours.

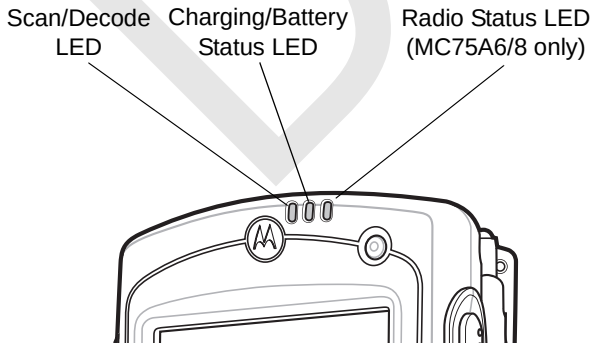

Figure 1-7 *LED Indicators*

DRAFT

Table 1-2 *LED Charge Indications*

Charging/Battery Status LED	Indication
Off	MC75A is not charging. MC75A is not inserted correctly in the cradle or connected to a power source. Charger/cradle is not powered.
Slow Blinking Amber (1 blink every 2 seconds)	MC75A is charging.
Solid Amber	Charging complete. Note: When the battery is initially inserted in the MC75A, the amber LED flashes once if the battery power is low or the battery is not fully inserted.
Fast Blinking Amber (2 blinks/second)	Charging error, e.g.: • Temperature is too low or too high. • Charging has gone on too long without completion (typically eight hours).

Charging Spare Batteries

See *Chapter 7, Accessories* for information on using accessories to change spare batteries.

Charging Temperature

Charge batteries in temperatures from 0°C to 40°C (32°F to 104°F). Charging is intelligently controlled by the MC75A.

To accomplish this, for small periods of time, the MC75A or accessory alternately enables and disables battery charging to keep the battery at acceptable temperatures. The MC75A or accessory indicates when charging is disabled due to abnormal temperatures via its LED. See *Table 1-2*.

Powering On the MC75A

Press the **Power** button to turn on the MC75A. If the MC75A does not power on perform a warm boot. See *Resetting the MC75A on page 2-17*.

When turning the MC75A on for the first time, the splash screen displays for about a minute as the MC75A initializes its flash file system, then the calibration window appears. Note that these windows also appear upon cold boot.

✓ ***NOTE*** When the MC75A powers up after inserting a battery for the first time, the device boots and powers on automatically.

Calibrating the Screen

To calibrate the screen so the cursor on the touch screen aligns with the tip of the stylus:

1. Remove the stylus from its holder on the back of the MC75A.
2. Tap the screen to begin calibration.
3. Carefully press and briefly hold the tip of stylus on the center of each target that appears on the screen.
4. Repeat as the target moves around the screen.

DRAFT

Checking Battery Status

To check the charge status of the main battery or backup battery in the MC75A, tap **Start** > **Settings** > **Power** icon to display the **Power** window.

To save battery power, tap the **Advanced** tab and set the MC75A to turn off after a specified number of minutes.

Micro Secure Digital (microSD) Card

The microSD card slot provides secondary non-volatile storage. The slot is located on the side of the MC75A (see *Figure 1-8*). Refer to the documentation provided with the card for more information, and follow the manufacturer's recommendations for use.

CAUTION Follow proper ESD precautions to avoid damaging the microSD card. Proper ESD precautions include, but are not limited to, working on an ESD mat and ensuring that the operator is properly grounded.

To install the microSD card:

1. Remove the memory card cover on the side of the MC75A by loosening the two captive screws.

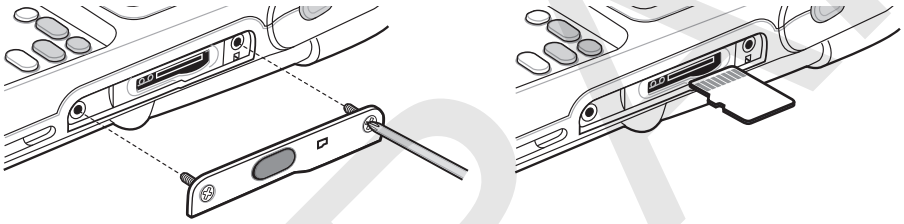

Figure 1-8 *Card Installation*

2. Insert the card with the card contacts facing up, until you feel a click.
3. Replace the memory card cover and tighten the screws.

To remove an microSD card:

1. Remove the memory card cover by loosening the two captive screws.

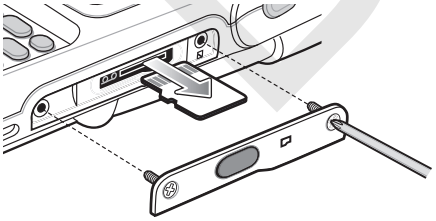

Figure 1-9 *Card Removal*

2. Carefully press and release the card to eject it.
3. Remove the card from the card slot.
4. Replace the memory card cover and tighten the screws.

DRAFT

Adjusting the Handstrap

The MC75A handstrap is attached to the bottom of the battery cover. Adjust the handstrap to increase comfort when holding the MC75A for extended periods of time. To adjust the handstrap:

1. Feed the handstrap through the handstrap slot.
2. Secure the handstrap by pressing the two sides together as shown in *Figure 1-10*.

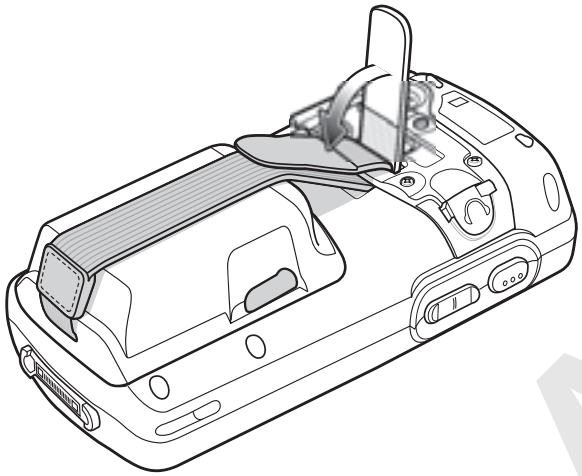

Figure 1-10 *Handstrap Adjustment*

Replacing the Main Battery

3. If the MC75A is in suspend mode, press the red **Power** button to wake the device.
4. Press the red **Power** button to suspend the MC75A.
5. Wait for red Decode LED to turn on and then turn off.
6. Open the battery cover latches on either side of the battery cover.

DRAFT

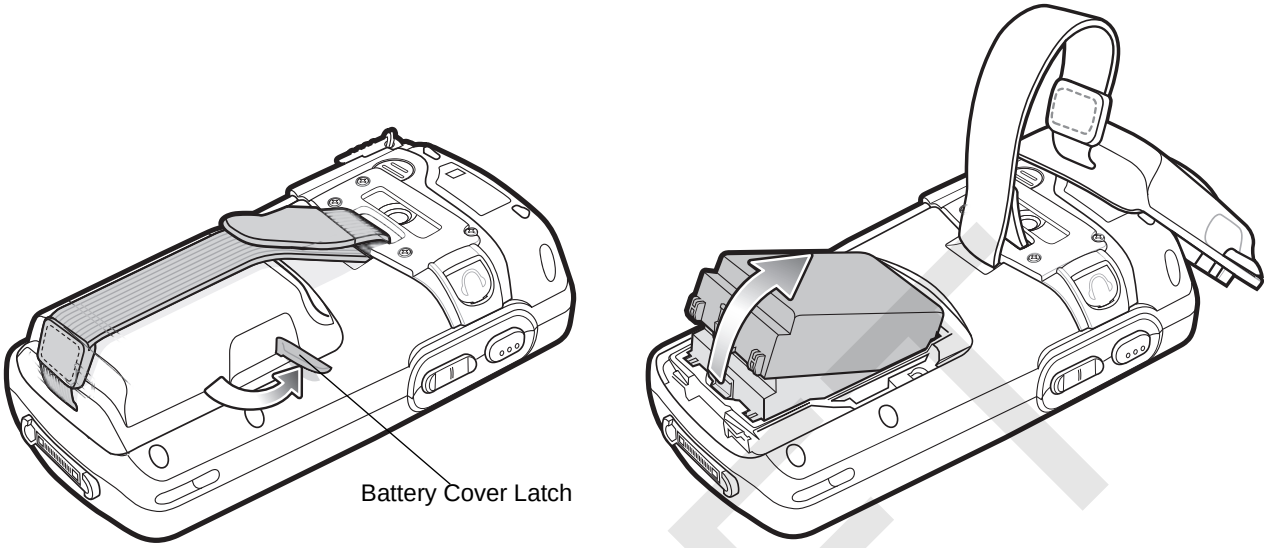

Figure 1-11 *Removing the Battery Cover*

7. Lift the top of the battery cover and remove.
8. Press the battery release latch on the bottom of the battery to unlock, and lift the battery out of the well.
9. Insert the replacement battery, top first, into the battery compartment in the back of the MC75A.
10. Press the battery down into the battery compartment until the battery release latch snaps into place.

✓ ***NOTE*** Position the battery correctly, with the battery charging contacts on top of the charging contacts in the battery compartment.

11. With the battery cover latches open, insert the cover, bottom first, then press down on the top of the cover.
12. Close the battery cover latches on either side of the battery cover.
13. Press the red Power button to power on the MC75A.

DRAFT

Battery Management

Observe the following battery saving tips:

NOTE The MC75A factory default settings for the WWAN and WLAN radios are set to ON.

- Leave the MC75A connected to AC power at all times when not in use.
- Set the MC75A to turn off after a short period of non-use.
- Set the backlight to turn off after a short period of non-use.
- Turn off all wireless activities when not in use.
- Power off the MC75A when charging to charge at a faster rate.
- Set IST to turn the display off or to suspend when the MC75A is placed face down.

Changing the Power Settings

To set the MC75A to turn off after a short period of non-use:

1. Tap **Start** > **Settings** > **System** tab > **Power** icon > **Advanced** tab.
2. Select the **On battery power: Turn off device if not used for** check box and select a value from the drop-down list.
3. Select **ok**.

Changing the Backlight Settings

To change the backlight settings in order to conserve more battery power:

1. Tap **Start** > **Settings** > **System** tab > **Backlight** icon > **Battery Power** tab.
2. Select the **Disable backlight if device is not used for** check box and select a value from the drop-down list.
3. Select the **Brightness** tab.
4. Tap the **Disable backlight** check box to turn off the display backlight, or use the slider to set a low value for the backlight.
5. Select **ok**.

Changing the Keypad Backlight Settings

To change the keypad backlight settings in order to conserve more battery power:

1. Tap **Start** > **Settings** > **System** tab > **Keylight** icon > **Battery Power** tab.
2. Select the **On battery power: Disable keylight if device if not used for** check box and select a value from the drop-down list.
3. Select the **Advanced** tab.
4. Tap the **Disable keylight** check box to turn off the keypad backlight.
5. Select **ok**.

DRAFT

Turning Off the Radios

Windows Mobile 6 devices include **Wireless Manager**, which provides a simple method of enabling, disabling, and configuring all the device's wireless capabilities in one place.

To open **Wireless Manager**, tap the **Connectivity** icon or tap **Wireless Manager** on the **Today** screen.

Figure 1-12 *Opening Wireless Manager*

Select **Wireless Manager**.

Figure 1-13 *Wireless Manager Window*

NOTE Wireless connection options vary depending upon configurations.

To enable or disable a wireless connection, tap the specific button.

To enable or disable all wireless connections, tap the **All** button.

To configure settings for a connection, tap **Menu**.

DRAFT

Figure 1-14 *Wireless Manager Menu*

DRAFT

DRAFT

Chapter 2 Using the MC75A

Introduction

This chapter explains the buttons, status icons, and controls on the MC75A, and provides basic instructions for using the MC75A, including powering on and resetting the MC75A, and entering and capturing data.

The MC75A factory default radio states are:

- Wireless LAN - ON
- Bluetooth - OFF
- Phone - ON.

Home Screen

The Home contains the Status Bar at the top of the screen, the Today screen in the center and the Soft Keys at the bottom of the screen.

Each of these are described below.

Figure 2-1 *Home Screen*

DRAFT

Status Bar

The Status Bar at the top of the screen can contain the status icons listed in *Table 2-1*.

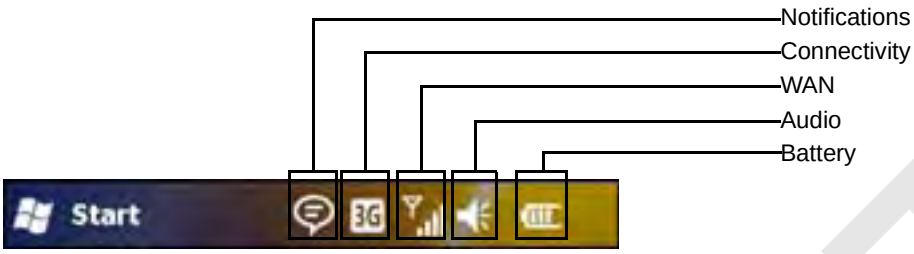

Table 2-1 *Status Icons*

Icon	Description
Notifications	
	Backup battery low.
	Notification that one or more instant messages were received.
	Notification that one or more e-mail/text messages were received.
	Notification that one or more voice messages were received.
	Speakerphone is on.
	There are more notification icons than can be displayed. Tap to display remaining icons.
	Indicates a reminder of an upcoming calendar event.
Connectivity	
	Connection is active.
	Connection is not active.
	Synchronization is occurring.
	Wi-Fi available.
	Wi-Fi in use.
H	HSDPA available. (MC75A6)
3G	3G available. (MC75A6)
G	GPRS available. (MC75A6)
E	EGPRS available. (MC75A6)
1X	1xRTT available. (MC75A8)
Ev	EVDO Rev. 0 available. (MC75A8)
E0	EVDO Rev. A available. (MC75A8)
	Dormant State - no data transmission during a 1x or EVDO connection. (MC75A8)

DRAFT

Table 2-1 *Status Icons (Continued)*

Icon	Description
	Call missed.
WAN	
	Dialing while no SIM card is installed.
	Voice call in progress.
	Calls are forwarded.
	Call on hold.
	Antenna/signal icon: wireless on/good signal.
	Antenna/signal icon: wireless off.
	Antenna/signal icon: no service or searching.
	HSDPA connecting. (MC75A6)
	HSDPA in use. (MC75A6)
	3G connecting. (MC75A6)
	3G in use. (MC75A6)
	GPRS connecting. (MC75A6)
	GPRS in use. (MC75A6)
	EGPRS connecting. (MC75A6)
	EGPRS in use. (MC75A6)
	EVDO connecting. (MC75A8)
	EVDO in use. (MC75A8)
	Roaming.
	SIM Card not installed. (MC75A6)
Audio	
	All sounds are on.
	All sounds are off.
	Vibrate is on.
Battery	
	Main battery is charging.
	Main battery has a full charge.
	Main battery has a high charge.

DRAFT

Table 2-1 *Status Icons (Continued)*

Icon	Description
	Main battery has a medium charge.
	Main battery has a low charge.
	Main battery has a very low charge.

Today Screen

The Today screen is scrollable and contains a list of applications and an Information Status bar. The Information Status bar highlights the application that is under it and provides additional information.

Touch and hold the screen with your finger and move the Today screen up and down. As the application names move under the Information Status bar, information relevant to that application appears in the bar.

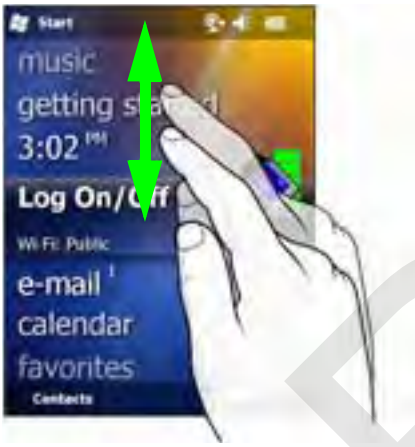

Figure 2-2 *Moving Today Screen*

You can also touch and hold the Information Status bar and move it up and down over an application name. Remove your finger and the Information Status bar and application name center in the screen.

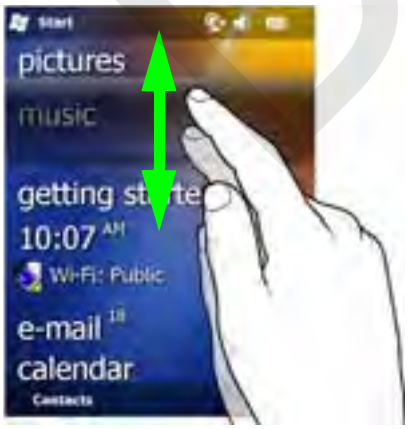

Figure 2-3 *Moving Information Status Bar*

DRAFT

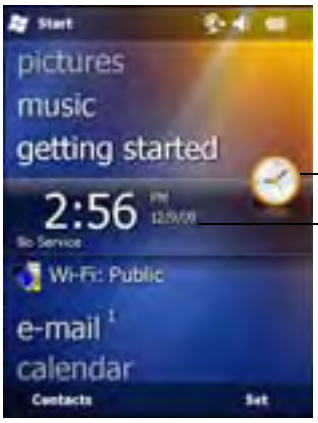

Figure 2-4 *Information Bar Example*

To customize the **Today** screen, tap **Start** > **Settings** > **Today** icon. Use the **Appearance** tab to customize the background and the **Items** tab to change the display format.

Classic Today Screen

The user can change the Today screen to the classic layout that is used in Windows Mobile 6.1.

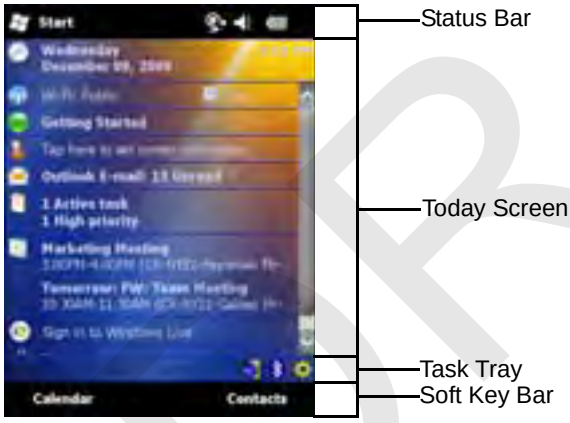

Figure 2-5 *Classic Today Screen*

To change to the classic view tap **Start** > **Settings** > **Today** icon > **Items** tab.

DRAFT

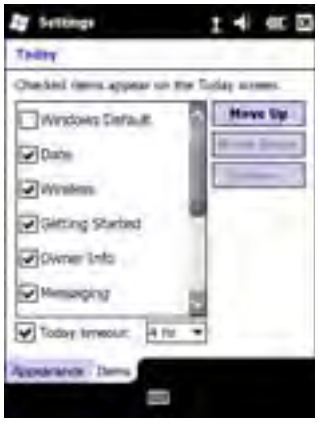

Figure 2-6 *Today Screen Settings*

Deselect the **Windows Default** checkbox and select any of the other checkboxes.

Tap **OK**.

NOTE The task bar is only visible in the classic view.

The task bar at the bottom of the screen can contain the task tray icons listed in *Table 2-2*.

Table 2-2 *Task Tray Icons*

Icon	Name	Description
	Wireless connection status	Indicates WLAN signal strength.
	Bluetooth Enabled	Bluetooth radio is on. (Available when StoneStreet One Bluetooth stack is enabled).
	Bluetooth Disabled	Bluetooth radio is off. (Available when StoneStreet One Bluetooth stack is enabled).
	Bluetooth Connection	Bluetooth radio is connected to another Bluetooth device. (Available when StoneStreet One Bluetooth stack is enabled).
	ActiveSync	Active serial connection between the MC75A and the host computer.
	IST	Use to configure the interactive sensing feature.

Soft Keys Bar

The Soft Key bar is located at the bottom of the screen and contains two soft key buttons. These buttons display an action and a menu to the user that are context sensitive and can be changed dynamically by an application. For example, in the Contacts list view, the soft keys are **New** and **Menu**. As the user begins creating a new contact in edit view, the soft keys change to **Done** and **Menu**.

DRAFT

Start Screen

The Start screen lists applications and folders available to the user. *Table 2-3* lists the default programs and folders listed on the **Start** screen.

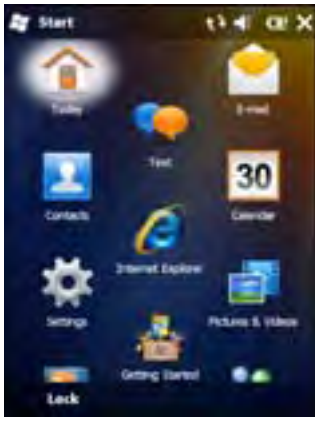

Figure 2-7 *Start Screen*

Table 2-3 *Programs and Folders on the Start Screen*

Icon	Name	Description	Icon	Name	Description
	Today	Close the Start menu and display the Today screen.		E-mail	Send an Email.
	Text	Send an SMS text message.		Contacts	Keep track of friends and colleagues.
	Calendar	Keep track of appointments and create meeting requests.		Internet Explorer	Browse Web and WAP sites as well as download new programs and files from the Internet.
	Settings	Open the Settings folder. See *Settings Folder on page 2-10*.		Pictures & Videos	View and manage pictures, animated GIFs, and video files.
	Getting Started	Launch the Getting Started application.		Windows Media	Play back audio and video files.
	Messenger	Use this mobile version of Windows Live Messenger.		Marketplace	Purchase applications from the Marketplace.
	Phone	Make and receive calls, switch between calls, and set up conference calling.		Microsoft My Phone	Synchronizes the MC75A's contacts, calendar, tasks, text messages, music, photos videos and documents with a Microsoft My Phone account.

DRAFT

Table 2-3 *Programs and Folders on the Start Screen (Continued)*

Icon	Name	Description	Icon	Name	Description
	Windows Live	Use this mobile version of Windows Live™ to find information on the web.		MSN Weather	Check the local weather.
	Games	Play games.		MSN Money	Keep track of your finances.
	Notes	Create handwritten or typed notes, drawings, and voice recordings.		Calculator	Perform basic arithmetic and calculations, such as addition, subtraction, multiplication, and division.
	Tasks	Keep track of your tasks.		File Explorer	Organize and manage files on your device.
	ActiveSync	Synchronize information between the MC75A and a host computer or the Exchange Server.		Office Mobile	Use the complete suite of Microsoft® Office applications for your mobile device. Excel Mobile OneNote Mobile PowerPoint Mobile Word Mobile
	Internet Sharing	Connect a notebook computer to the Internet using the MC75A's data connection.		Task Manager	Enables viewing of memory and CPU allocations and stops running processes. Refer to the *Microsoft Applications for Windows Mobile 6 User Guide* for more information.
	Search Phone	Search contacts, data, and other information on the MC75A. Refer to the Microsoft Applications for Windows Mobile 6 User Guide for more information.		Wireless Companion Folder	Open the Wireless Companion folder.
	Help	See Help topics for the current screen or program.		AirBEAM Client	Allows specially designed software packages to be transferred between a host server and the MC75A. Refer to the *MC75A Integrator Guide* for more information.

DRAFT

Table 2-3 *Programs and Folders on the Start Screen (Continued)*

Icon	Name	Description	Icon	Name	Description
	BT Information	Display information about the Bluetooth radio and generate a Bluetooth address bar code.		BTScanner CtlPanel	Set com port to use with a Bluetooth scanner.
	BTExplorer	Manages Bluetooth connections using BTExplorer. Only available when the StoneStreet One Bluetooth stack is enabled.		Remote Desktop	Log onto Windows NT server type computers and use all of the programs that are available on that computer from the MC75A.
	Modem Link	Enables the MC75A to be used as a modem.		SMS Staging	
	MSP Agent	Interacts with MSP agents to collect monitoring and asset information to enable the configuration, provisioning, monitoring and troubleshooting of the MC75A. Refer to the *MC75A Integrator Guide* for more information.		Rapid Deployment Client	Facilitates software downloads from a Mobility Services Platform Console FTP server to the MC75A. Refer to the *MC75A Integrator Guide* for more information.
	SIM Toolkit	Manage the contacts that are stored on your SIM card. Copy SIM contents to Contacts on the MC75A.		Search Widget	Install Microsoft application on the MC75A.
	DEMO	Launches the DEMO applications. This icon appears after the DEMO applications have been installed.			

DRAFT

Settings Folder

Table 2-4 lists the setting applications pre-installed on the MC75A. Tap **Start** > **Settings** to open the **Settings** folder.

Table 2-4 *Setting Applications in the Setting Folder*

Icon	Name	Description	Icon	Name	Description
	Clock & Alarms	Set the device clock to the date and time of your locale or to a visiting time zone when you're traveling. Alarms can also be set at specified days and times of a week.		Power	Check battery power and set the time-out for turning off the display to conserve battery power.
	Lock	Set a password for the MC75A.		Sounds & Notifications	Enable sounds for events, notifications, and more, and set the type of notification for different events.
	Connections Folder	Contains connection applications (see below).		Today	Customize the appearance of the Today screen and the information to display on it.
	Personal Folder	Contains personal applications (see below).		Microsoft My Phone	Synchronizes the MC75A's contacts, calendar, tasks, text messages, music, photos videos and documents with a Microsoft My Phone account.
	System Folder	Contains system applications (see below).			
Connections Folder					
	Beam	Set the MC75A to receive incoming IrDA beams.		Connections	Set up one or more types of modem connections for your device, such as phone dial-up, GPRS, Bluetooth, and more, so that your device can connect to the Internet or a private local network.
	Bluetooth	Open the Bluetooth application, set the MC75A to visible mode and scan for other Bluetooth devices in the area.		Domain Enroll	Make your device an AD domain member for device management and security. Refer to the *Microsoft Applications for Windows Mobile 6 User Guide* for more information.

DRAFT

Table 2-4 *Setting Applications in the Setting Folder (Continued)*

Icon	Name	Description	Icon	Name	Description
	Wi-Fi	Setup wireless network connection and customize settings.		USB to PC	Enables or disables the enhanced network connectivity.
	Wireless Manager	Enables or disables the MC75A's wireless radios and customizes Wi-Fi, and Bluetooth settings.			
Personal Folder					
	Buttons	Assign a program to a button.		Owner Information	Enter personal information on the MC75A.
	Input	Set options for each of the input methods.		Phone	Configure phone settings.
System Folder					
	About	View basic information such as the Windows Mobile® version and type of processor used on the MC75A.		Certificates	See information about certificates installed on the MC75A.
	Backlight	Set the display backlight time-out and adjust brightness.		Customer Feedback	Submit feedback on the Windows Mobile 6 software.
	Error Reporting	Enable or disable the device's error reporting function. When this function is enabled and a program error occurs, technical data about the state of the program and your computer is logged in a text file and delivered to Microsoft's technical support if you choose to send it.		Encryption	Allow files on a storage card to be encrypted. Encrypted files are readable only on your device.
	External GPS	Set the appropriate GPS communication ports, if required. You may need to do this when there are programs on the device that access GPS data or you have connected a GPS receiver to the device.		HAC Settings	Control the phone's HAC feature.

DRAFT

Table 2-4 *Setting Applications in the Setting Folder (Continued)*

Icon	Name	Description	Icon	Name	Description
	GPS Setup	View GPS SUPL information.		IST Settings	Set the appropriate setting for configuring the device's interactive Sensor Technology.
	Managed Programs	Displays the programs that were installed on the MC75A using Mobile Device Manager.		Keylight	Set the keypad backlight time-out.
	Memory	Check the device memory allocation status and memory card information and stop currently running programs.		Regional Settings	Set the regional configuration to use, including the format for displaying numbers, currency, date, and time on the MC75A.
	Phone Info	View phone information.		Remove Programs	Remove programs that you installed on the MC75A.
	System Info	Displays the MC75A's software and hardware information.		Screen	Change the screen orientation, re-calibrate the screen, and change the screen text size.
	Task Manager	Stop running programs.		Trigger Settings	Enables the MC75A to use the Snap-on Trigger Handle.

Adjusting Volume

To adjust the system volume using the **Speaker** icon in the navigation bar:

1. Tap the **Speaker** icon. The **Volume** dialog box appears.

Figure 2-8 *Volume Dialog Box*

DRAFT

2. Tap and move the slide bar to adjust the volume.
3. Select the **On** or **Off** radio button to turn the volume on or off.

You can also adjust the system volume using the **Sounds & Notifications** window, or use the **Up/Down** button on the side of the MC75A.

Battery Status Indications

Battery icons appear on the navigation bar indicating the battery power level. When the main battery or backup battery power falls below a predetermined level the icon indicates the status and a battery dialog box appears indicating the status of the main or backup battery.

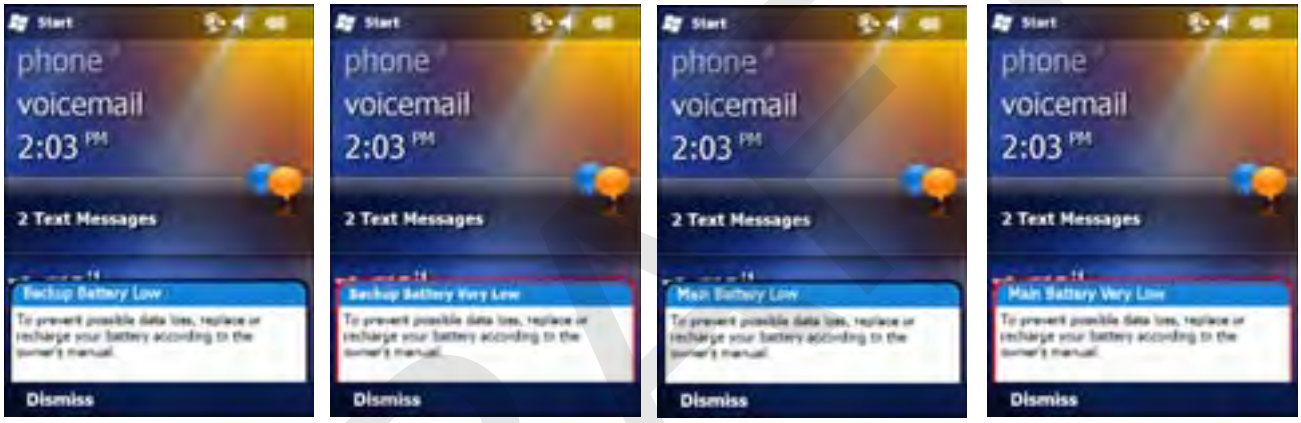

Figure 2-9 *Battery Status Dialog Box*

The **Battery** icon always appears in the **navigation bar** when the Today screen is visible. The icon indicates the battery power level. The message displays until the **Dismiss** button is pressed.

Figure 2-10 *Battery Icon on the Title Bar*

Also view the battery status using the **Power** window.

Battery Reserve Options

If the charge of the battery reaches a critical threshold, the MC75A shuts down. This threshold can be changed but affects the amount of time that data can be retained.

1. Tap **Start** > **Settings** > **Power** icon > **RunTime** tab. A warning message appears.

DRAFT

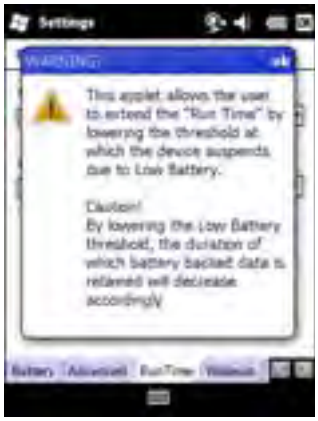

Figure 2-11 *Warning Message*

2. Read the warning message and tap **OK**.

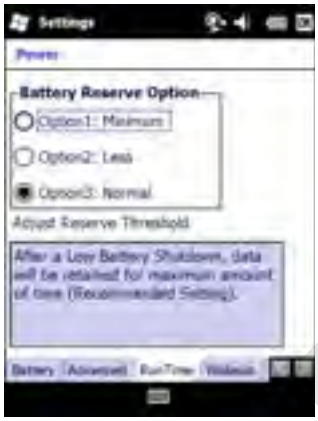

Figure 2-12 *RunTime Tab*

3. Select one of the **Battery Reserve Options**.
   - **Option 1: Minimum** - After a low battery shutdown, data will be retained for minimum amount of time. Battery should be replaced immediately to avoid data loss.
   - **Option 2: Less** - After a low battery shutdown, data will be retained for less than normal amount of time.
   - **Option 3: Normal** - After a low battery shutdown, data will be retained for maximum amount of time.
4. Tap **OK**.

Main Battery Temperature Notifications

The temperature notification system implements three levels of notification when the temperature within the battery exceeds specific temperature thresholds:

- **Level 1: Temperature Watch**; this level is similar to main battery low warning. It indicates that the battery temperature has reached the first threshold level. The user should move to an environment within proper operating temperature.
- **Level 2: Temperature Warning**; this level is similar to main battery very low warning. It indicates the battery temperature has reached the second threshold level. The user should stop using the MC75A.

DRAFT

- **Level 3: Temperature Error**; this level indicates the battery has reached an unusable temperature threshold and immediately suspends the MC75A. This level does not have any graphical notification associated with it.

Figure 2-13 *Main Battery Temperature Watch Dialog Box*

Figure 2-14 *Main Battery Temperature Warning Dialog Box*

NOTE The **Temperature Warning** dialog box remains visible until you tap **Hide**.

LED Indicators

The MC75A has three LED indicators. The Scan/Decode LED indicates status for bar code scanning. The Charging/Battery Status LED indicates battery charging and status. The third LED is application programmable.

DRAFT

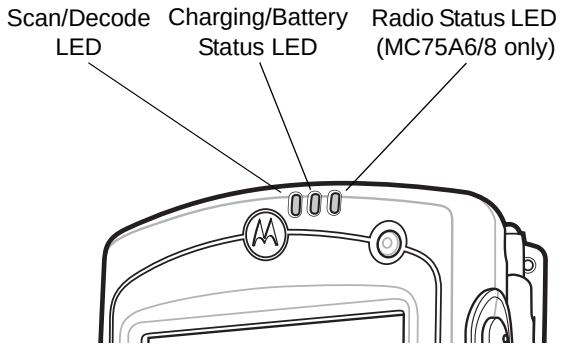

Figure 2-15 *LED Indicators*

Table 2-5 *LED Indications*

LED State	Indication
Scan/Decode LED	
Solid Green	Successful decode/capture.
Solid Red	Laser enabled, scanning/imaging in process.
Blink Red	MC75A is going into suspend mode.
Off	Not enabled.
Charging/Battery Status LED	
Slow Blinking Amber	Main battery in MC75A is charging.
Solid Amber	Main battery in MC75A is fully charged.
Fast Blinking Amber	Charging error.
Off	Not charging.
Single Blink Amber (when Power button pressed)	Battery depleted.
Blinking Amber (when Power button pressed)	Battery over-temperature condition.
Radio Status LED	
Slow Blinking Green	WAN radio is on.
Off	WAN radio is off.

NOTE For information about scanning/decoding, see *Chapter 3, Data Capture*. For information about WAN radio status and settings, see *Chapter 4, Using the Phone*, or refer to the *MC75A Enterprise Digital Assistant Integrator Guide.*

DRAFT