HPH1
High Performance Variable Speed Operator

INSTALLATION MANUAL

HPH1, 1.25 HP (120V/240V Single Phase & 230V 3 Phase)
HPH2, 1.25 HP (460V/575V Three Phase, via stepdown transformer)

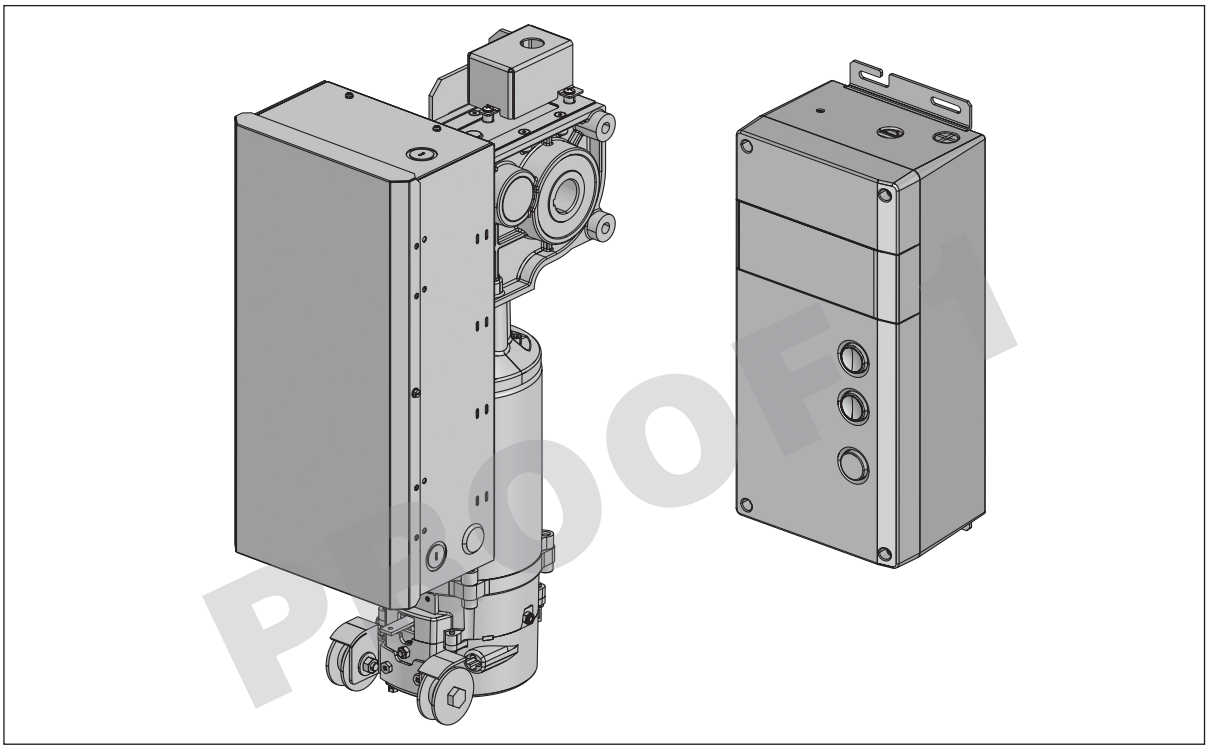

PROOF 1

NOT FOR RESIDENTIAL USE

- Please read this manual and the enclosed safety materials completely, prior to installation and use!
- This product is to be installed and serviced by a trained door systems technician ONLY.
- These operators are compatible with myQ® Smart Facility Access*f* and Security+ 2.0® accessories.

Need QR code for wiring diagram from J.P.

Request: 'add something for WiFi'
no content supplied

c UL us LISTED

LiftMaster
300 Windsor Drive
Oak Brook, IL 60523

LiftMaster®

POWERED BY myQ®

SAFETY INFORMATION

⚠ WARNING

Mechanical

⚠ WARNING

Electrical

When you see these Safety Symbols and Signal Words on the following pages, they will alert you to the possibility of ***serious injury*** or ***death*** if you do not comply with the warnings that accompany them. The hazard may come from something mechanical or from electric shock. Read the warnings carefully.

⚠ CAUTION

When you see this Signal Word on the following pages, it will alert you to the possibility of damage to your door and/or the door operator if you do not comply with the cautionary statements that accompany it. Read them carefully.

IMPORTANT NOTES:

- *BEFORE attempting to install, operate or maintain the commercial door operator, you must read and fully understand this manual and follow all safety instructions.*
- *DO NOT attempt repair or service of a commercial door operator unless you are an Authorized Service Technician.*
- *A commercial door operator should only be installed on a properly balanced door only. Ensure door is properly balanced prior to installation.*

ENTRAPMENT PROTECTION DEVICES:

LiftMaster Monitored Entrapment Protection (LMEP)

Monitored photoelectric sensors and/or door edge sensors are required for any momentary contact to close modes of operation. See page 20› for additional information. Refer to the accessories page 45, 'Entrapment Protection Devices' for available options.

IMPORTANT INSTALLATION INSTRUCTIONS

⚠ WARNING

TO REDUCE THE RISK OF SEVERE INJURY OR DEATH:

1. READ AND FOLLOW ALL INSTALLATION WARNINGS AND INSTRUCTIONS.
2. Install door operator ONLY on a properly balanced and lubricated door. An improperly balanced door may NOT reverse when required and could result in SEVERE INJURY or DEATH.
3. ALL repairs to cables, spring assemblies and other hardware MUST be made by a trained door systems technician BEFORE installing an operator.
4. Disable ALL locks and remove ALL ropes connected to a door BEFORE installing an operator to avoid entanglement.
5. Install an operator, a minimum of 8 feet (2.44 m) from the floor.
6. NEVER connect a door operator to a power source until instructed to do so.
7. NEVER wear watches, rings or loose clothing while installing or servicing an operator. They could be caught in the door or operator mechanisms.
8. Install a control station and/or controller:
   - within sight of the door
   - out of reach of children and at a minimum height of 5 feet (1.5 m) above floors, landings, steps, or any other adjacent walking surface
   - away from ALL moving parts of the door
9. Install the control station far enough from the door to prevent the user from coming in contact with the door while operating the controls.
10. Install the entrapment warning placard on the wall next to the control station in a prominent location, visible from the door.
11. Instruct the end user on the operation of the manual release.
12. Upon completion of installation, test the entrapment protection device(s).
13. **SAVE THESE INSTRUCTIONS.**

PROOF 1

Request: 'change to wall controller' standardized terminology calls for 'door control' or 'control station' currently left as is

ALL PAGE NUMBERS AND HEADERS TEMPORARY PENDING FINAL PASS

TABLE OF CONTENTS

SAFETY INFORMATION **3**

OPERATOR **4-9**
- Overview 4-6
- Carton Inventory 6
- Operator Specifications 7-10

INSTALLATION 11-13
- Determine Mounting Location 11
- Mounting the Operator 12
- Mounting the Door Control Station (Controller) 13

WIRING **14-20**
- Wiring the Power Head 14-16
- Wiring the Encoder 16
- Wiring Incoming Power to the Controller 18
- Wiring Optional Accessories 18-19
- Wiring the 3-Phase Step Down Transformer 19
- LiftMaster Monitored Entrapment Protection (LMEP) . . 20
- Install the LiftMaster Monitored Entrapment Protection (LMEP) Devices 20
- Wire the LiftMaster Monitored Entrapment Protection (LMEP) Devices 20

PROGRAMMING **21-38**
- Profile and Quick Setup 21-23
- Menus 24-25
- Radio & Remotes 26
- Erasing Programmed Devices 26
- Programming and Frequency Profiles 27
- Setting the Open Mid-Stop 27
- Profile Selection 28
- Reset Defaults 28
- Operating Modes 29-33
- Adjusting Limits 34
- Entrapment Protection Limits 34
- Timers 35-36
- Programming the Door in Motion Relay 37
- Programmable Inputs 38
- Non-monitored Edges and Light Curtain Input 38
- LMEP Unlearn 38

TROUBLESHOOTING **39-41**

MAINTENANCE **42**
- Maintenance Schedule 42
- Life of Operator Feature 42
- How to Order Repair Parts 42

ACCESSORY WIRING DIAGRAM **43**

WARRANTY **44**

ACCESSORIES **45-46**

REPAIR PARTS **47**

PROOF 1

CONNECTIVITY

- *myQ® Smart Facility Access Technology enables secure monitoring and control of door operators and other myQ® Smart Facility Access devices with a smartphone, tablet or computer.*
- *Alerts can be received as email notifications, ensuring the status of a commercial door.*

WI-FI

PLEASE PROVIDE CONTENT REGARDING WI-FI

- *Commissioning wifi*
- *connecting to myq smart facility access*

SAFETY AND SECURITY

- *Security+ 2.0® – with every press of the button, a new code is sent to the commercial door operator, ensuring a door will only open for the remote control programmed.*

UL 325 requires all commercial door operators to be either constant pressure to close or be equipped with a primary external monitored entrapment protection device.

LiftMaster® is the leading brand of professionally installed commercial door operators and access control products for businesses worldwide. We are committed to quality products, innovative designs and comprehensive services which exceed our Customers' expectations.

THIS DATA AND THE FOLLOWING PAGE MAY NOT BE ACCURATE OR IS PENDING.
PLEASE PROVIDE ACCURATE INFORMATION FOR THE HPH1

OPERATOR SPECIFICATIONS

MODEL	HP	VOLTAGE	PHASE	AMPS	POWER (FT LBS/ SEC)
HPH1	1.25 HP	120V	1		
	1.25 HP	240V	1		
	1.25 HP	230V	3		
HPH2	1.25 HP	460V	3		
	1.25 HP	575V	3		

TYPE: Limited Duty: up to 100 cycles per hour
up to 650 cycles per day

ELECTRICAL

DOOR IN MOTION RELAY: 1A @ 24Vdc OR 0.5A @ 120Vac

AUXILIARY OUTPUT VOLTAGE: 24Vdc ; 500mA

CONTROL STATION: VFD Controller with Integrated Open/ Close/Stop Controls, LCD Display, floor level wiring, and floor level commissioning through intuitive user menu.

OPERATING MODES: B2, C2, D1, E2, T, TS. FSTS. See page 29 for more information regarding operating modes.

BRAKE: Solenoid powered-off brake standard on all units

MANUAL HOIST: Single action manual hoist with integral manual operation protection circuit.

CABLE TENSION MONITOR:
Detects ANY slack that may occur in the cables and will reverse the door, eliminating service calls.

MECHANICAL

DRIVE REDUCTION:
1.25HP Operator: 20:1 High-Efficiency 2-Stage Gearbox.

DOOR SPEED:
Three preconfigured frequency profiles.

LIMIT ADJUST: Electronic limits, Floor level adjustability up to 20ft.

TEMPERATURE RATINGS: -20°C (14°F) to +40°C (104°F)

PROOF 1

VOLTAGE SELECTION

MODEL	HP	VOLTAGE	PHASE
HPH1	1.25	120V	1 Phase
HPH1	1.25	240V	1 Phase
HPH1	1.25	230V	3 Phase
HPH2	1.25	460V	3 Phase (via separate stepdown transformer)
HPH2	1.25	575V	3 Phase (via separate stepdown transformer)

FOR SECTIONAL DOORS (SECTIONAL, HIGH-LIFT OR VERTICAL)

WEIGHT	MAX. DOOR WEIGHT	SPEED	DRUM SIZE	OUTPUT SHAFT SPEEDS
	1025 lbs	Avg. of 24"/sec		80 RPM - 60hz (big heavy doors)
				120 RPM - 90hz (average doors)
				160 RPM - 120 hz (small, light doors)

FOR ROLLING STEEL DOORS

WEIGHT	MAX. DOOR WEIGHT	SPEED	DRUM SIZE	OUTPUT SHAFT SPEEDS
	500 lbs	Avg. of 24"/sec		80 RPM - 60hz (big heavy doors)
				120 RPM - 90hz (average doors)
				160 RPM - 120 hz (small, light doors)

OPERATOR SPECIFICATIONS (CONT.)

(These values are based on a 3/4" curtain thickness - for more door thicknesses, please visit **https://www.LiftMaster.com/VariableSpeed** and look for System Selection Guide under Technical Specifications)

SYSTEM SELECTION FOR DEFAULT SPEED SETTING (MEDIUM)

		DOOR HEIGHT					
	WEIGHT (LBS)	10'	12'	14'	16'	18'	20'
3/4" CURTAIN	300	1/2 HP Default					
	500						
	800						
	1050						
	1200						
	1350						
	1560						
	1750	1 HP Default					
	1860						
	2000						

FPO

SYSTEM SELECTION FOR HIGH SPEED SETTING

		DOOR HEIGHT					
	WEIGHT (LBS)	10'	12'	14'	16'	18'	20'
3/4" CURTAIN	300	1/2 HP High					
	500						
	800						
	1050						
	1200	1 HP High					
	1350						
	1560						
	1750						
	1860			Not Recommended			
	2000						

PROOF 1

OVERVIEW

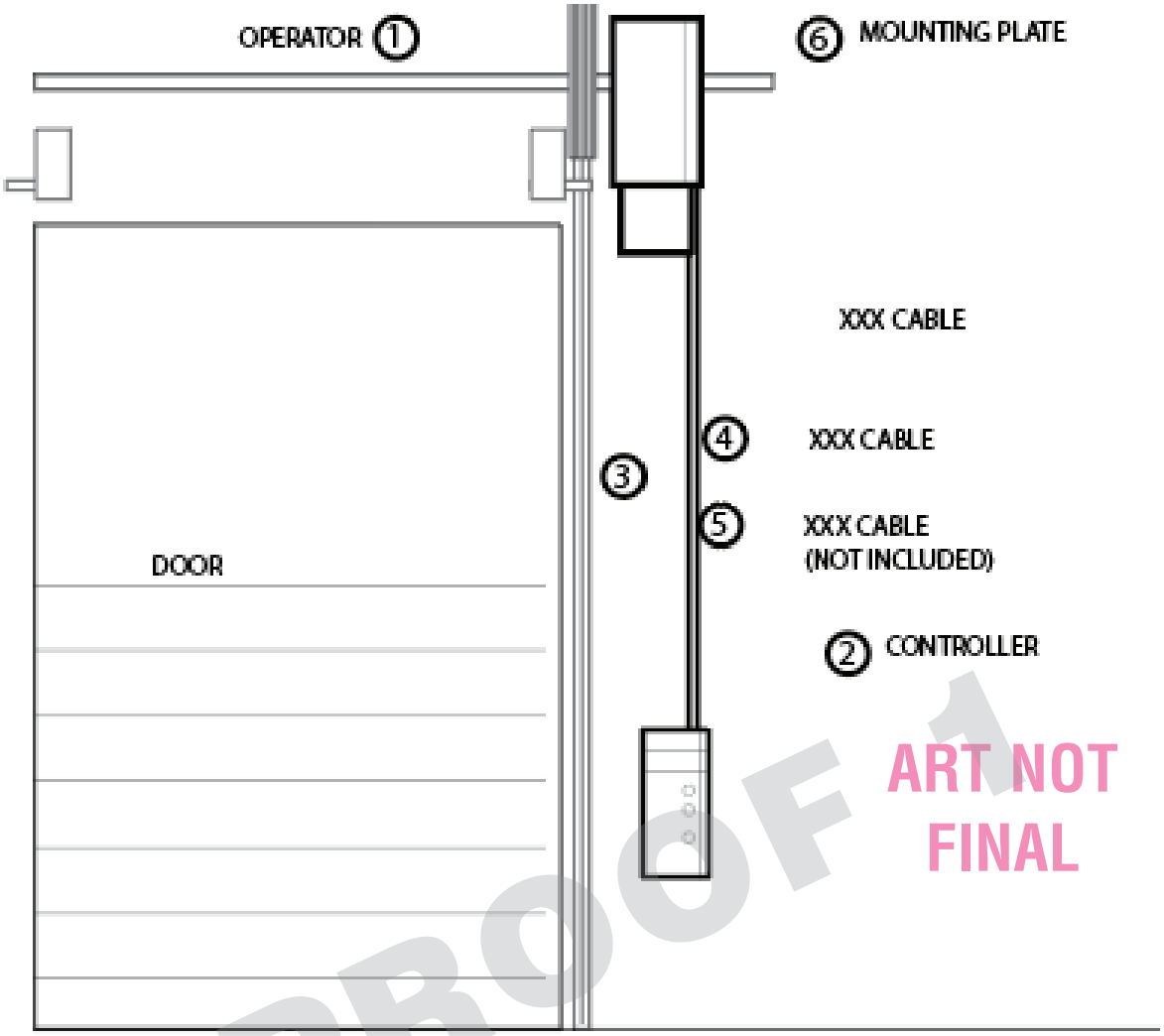

ART NOT FINAL
PROOF 1

CARTON INVENTORY

Before beginning installation, confirm all components are enclosed.

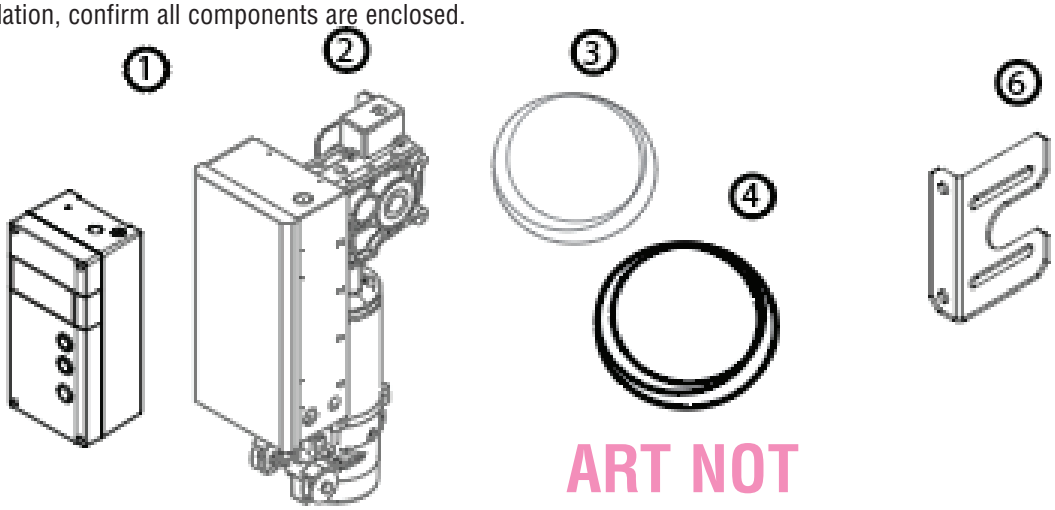

ART NOT FINAL

⚠ WARNING

To prevent possible SERIOUS INJURY or DEATH:

- DO NOT connect electric power until instructed to do so.
- If the door lock needs to remain functional, install an interlock switch.
- ALWAYS call an Authorized Service Technician if door binds, sticks, or is out of balance. An unbalanced door may NOT reverse when required.
- NEVER try to loosen, move, or adjust doors, door springs, cable, pulleys, brackets, or their hardware. ALL of which are under EXTREME tension and can cause SERIOUS PERSONAL INJURY.
- Disable ALL locks and remove ALL ropes connected to door BEFORE installing and operating door operator to avoid entanglement.
- Fasten the operator SECURELY to structural supports of the building.
- Concrete anchors MUST be used in installing ANY brackets.

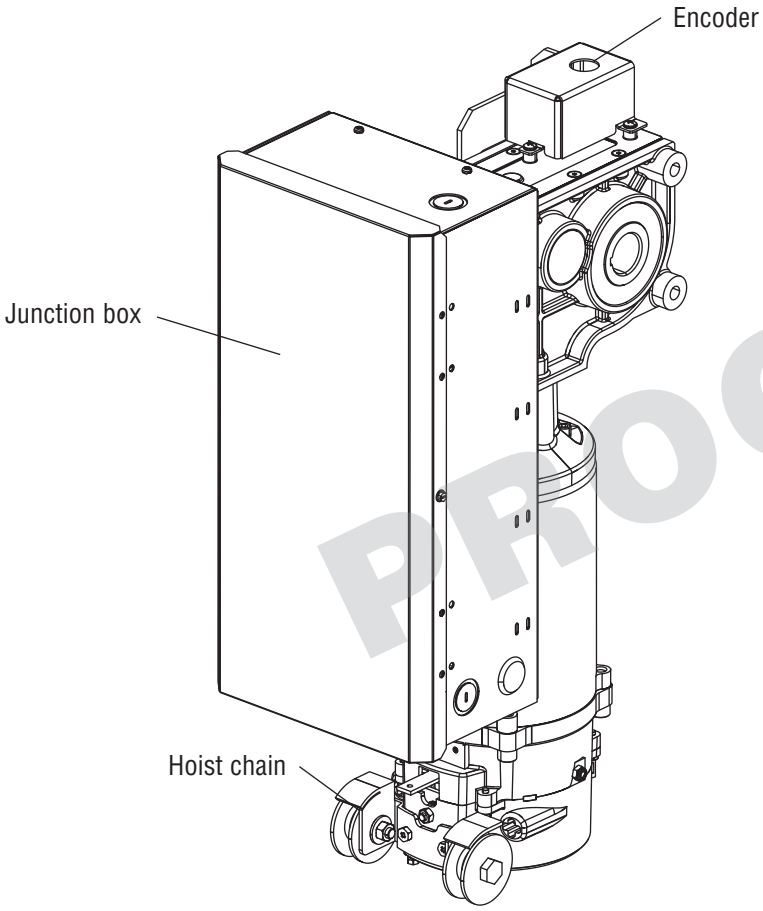

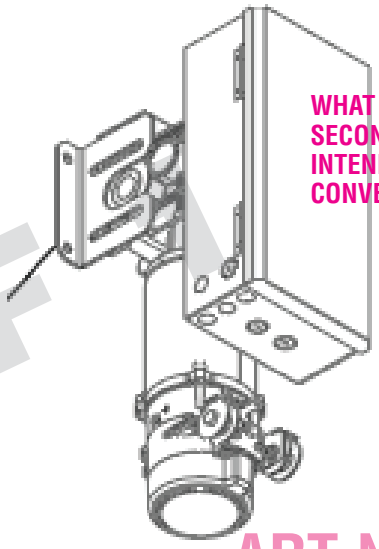

WHAT IS THIS SECOND IMAGE INTENDED TO CONVEY?

PROOF

ART NOT FINAL

Shaft Size
Keys
Sleeve

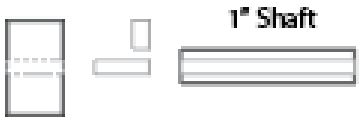

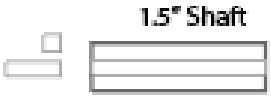

PLEASE PROVIDE CONTENT AND REFERENCE

TOOLS NEEDED

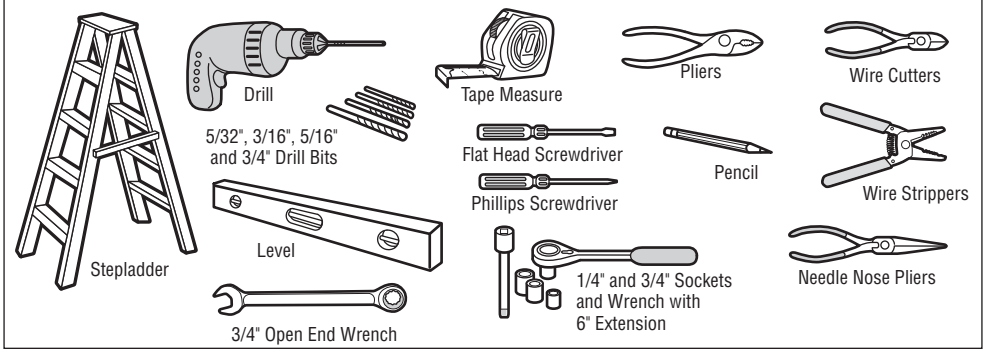

INSTALLATION

On HTH operators, the motor head can be mounted on either the right or left side of the door, as shown in the diagram below.

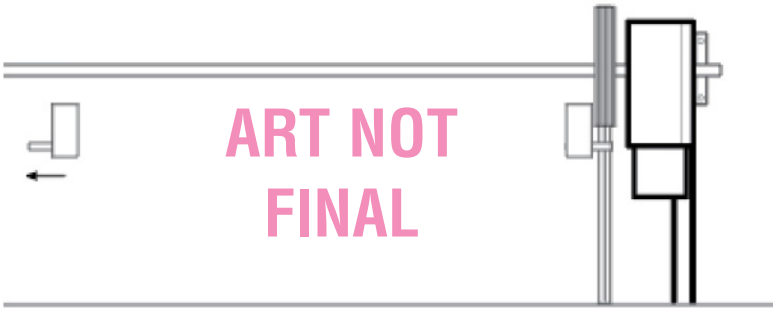

INSTALLING THE POWERHEAD

NOTE: *Before lifting operator be sure to install the hoist chain. Attach the mounting bracket to operator prior to lifting into position. Do not tighten fasteners.*

1. Attach a 1/2¨-13 eye bolt to the uppermost mounting hole of the wall brace.
2. Using a customer-supplied hoist or come-along, lift the operator to the level of the door shaft.
3. Slide operator onto the door shaft
4. Release the hoist and using the operator hoist chain, rotate the output shaft of operator so the keyways are aligned.
5. Insert key into the door shaft and operator output shaft
6. If you have a 1" shaft, use a shaft adapter (included)*
7. Once the operator is in the desired location on the door shaft, slide the mounting bracket against the wall and mark the hole locations.
8. Drill all necessary holes. (remove mounting bracket if necessary)
9. Secure the mounting bracket to the wall, and secure the mounting bracket to the operator. Tighten all fasteners.

IMAGE SHOWING
POWERHEAD INSTALLATION
OVERVIEW

PROOF 1

*add instructions here for using shaft adapter. Show pics

POWERHEAD INSTALLATION

STEP 1: LOCATE THE KEY

NEED TEXT

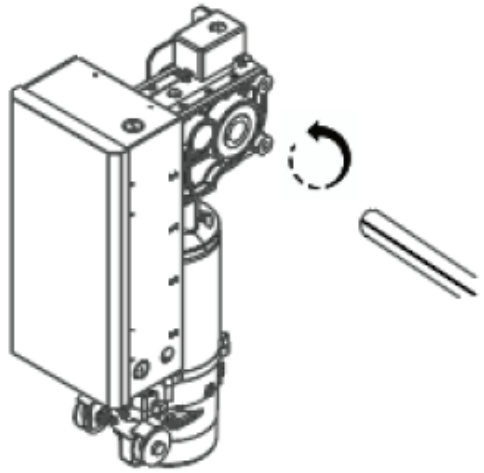

STEP 2: OPERATOR DISTANCE

NEED TEXT

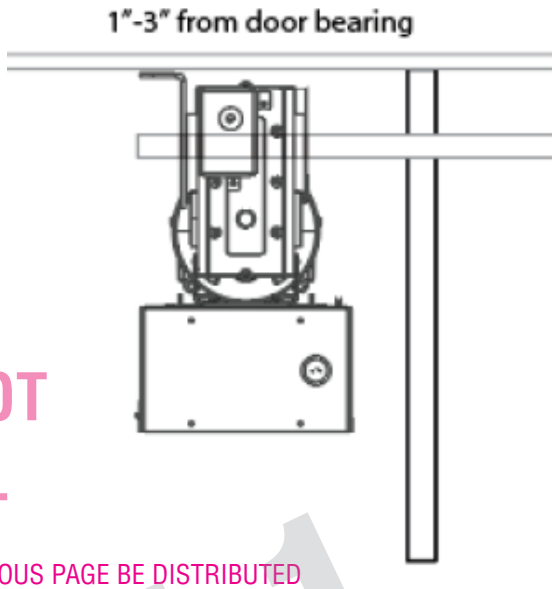

ART NOT FINAL

SHOULD THE TEXT ON THE PREVIOUS PAGE BE DISTRIBUTED THROUGH THESE STEPS? IF SO, WHICH STEPS GO WITH WHICH IMAGE? ARE NEW HEADERS REQUIRED? (SEE 'LOCATE KEY' WHICH SEEMS TO HAVE NO INSTRUCTIONS ASSIGNED)

PROOF 1

STEP 3: ALIGNING THE OPERATOR

NEED TEXT

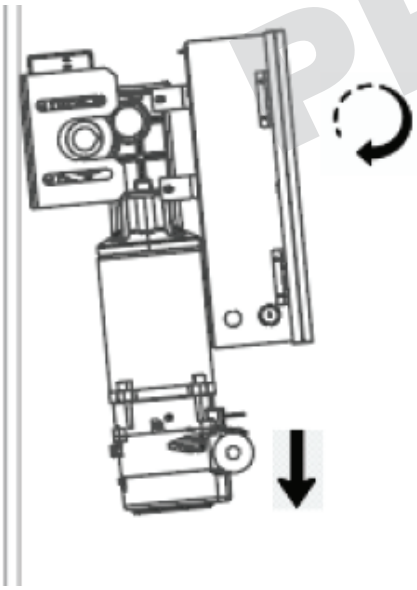

STEP 4: MOUNTING THE OPERATOR

NEED TEXT

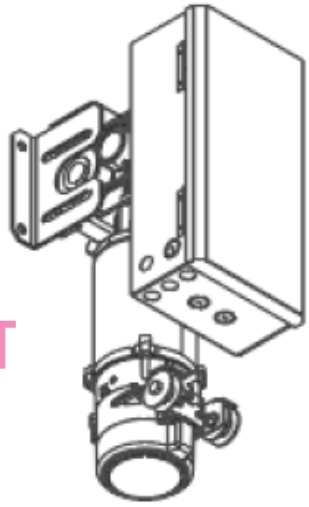

ART NOT FINAL

JUNCTION BOX WIRING

TONY TO PROVIDE A PICTURE WITH INFORMATION ON WHERE WIRING WILL COME IN AND WHAT EVERYTHING IS

Wire mains input power here

Connect the earth ground wire to the green wire using the wire nut provided.

Connect Line and Neutral wires to the terminal block as marked (L, N)

ART NOT FINAL

CALLOUTS TO BE APPLIED WHEN COMPLETE

PROOF 1

Locate the black 4-Wire cable and the black 2-Wire cable with connectors fastened to one end.

Feed the loose wire ends of the cable down the conduit to the door control.

Plug the 5-pin connectors and 2-pin into the inverter board as shown.

INSTALLATION

INSTALLING THE CABLE TENSION MONITOR

1. Make sure the door cable is approximately 3/4"-1" (19-20 mm) from the mounting surface. Door adjustments or shimming may be required to achieve proper depth for the door cable. The bracket must be flush with the mounting surface
2. Position the cable tension monitor as close to the drum as possible. The optimal distance of the cable from the wall surface is no more than 2.5" (6.35 cm), and be sure the roller extends 1/8"-1/4" past the cable. Make sure the cable tension monitor and roller is free from any obstructions in all positions of operation..

   NOTE: *There must be no obstructions in the installation area that prevent the cable tension monitor from closing completely when slack is detected.*
3. Use appropriate fasteners to fit a .282 clearance hole Anchor to wall. (Fasteners not included)
4. Attach the cable tension monitor to the wall using the hardware provided. Make sure that the roller is on top of the cable.
5. Run bell wire to the door operator junction box, and down to the control box through conduit. See page XX for more details.
6. Connect the bell wires in parallel to the cable tension monitor terminals on the controller. (polarity is not important) See below for detailed controller wiring instructions.

   NOTE: *Cable must have tension through entire door travel. Make sure there is no slack in cable on opposite side of door during normal operation. If slack occurs during door travel, adjust cables as required.*

A second cable tension monitor may be installed for additional security. When two cable tension monitors are installed, the door will not move in the down direction or will reverse if one of the monitors detects slack or is disconnected. If a second cable tension monitor is installed, the leads must be wired in parallel. If one of the cable tension monitors is removed, unplug both monitors from the operator, then plug in the monitor you wish to use. Unplug and plug in the operator three times to relearn the monitor to the operator.

THE CABLE TENSION MONITORS MUST BE CONNECTED AND PROPERLY INSTALLED BEFORE THE DOOR OPERATOR WILL MOVE IN THE DOWN DIRECTION.

THE CABLE TENSION MONITOR DETECTS ANY SLACK THAT MAY OCCUR IN THE CABLES AND WILL REVERSE THE DOOR, ELIMINATING SERVICE CALLS.

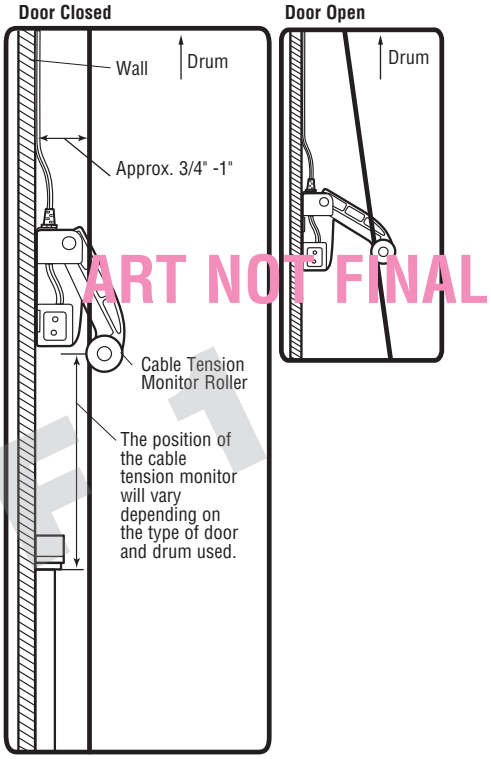

PROOF 1

TRACY RIZZI MIKE TISHLER

ADD THE LABEL INFORMATION SPECIFICS ?

WIRING THE CABLE TENSION MONITOR

TIP: *Wire both cable tension monitor bell wire pairs together using wire nuts and run a single bell wire pair to the controller, per step 6. (polarity is not important).*

1. Route the cable tension monitor wires through conduit to the right lower knockout on the junction box. (Use 1/2" or 3/4" conduit.)
2. The cable tension monitor wires will pass through the junction box and through the conduit leading to the door controller.
3. See the door controller wiring for further cable tension monitor instructions.

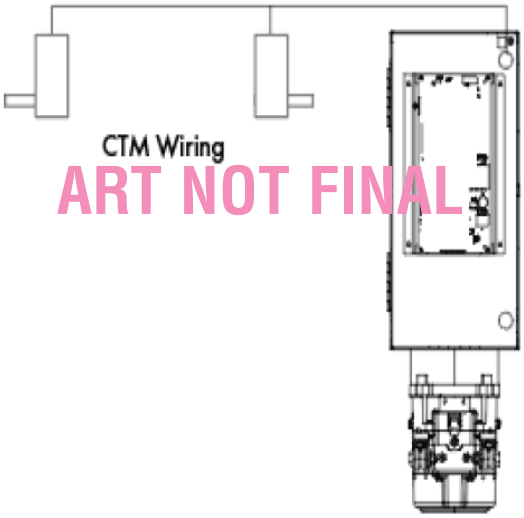

WIRING THE CABLE TENSION MONITOR (CONT.)

4. Locate the black 4-wire data cable with a green (color needs to be confirmed) 5 pin connector at one end.
5. Locate the black 2-wire Power Cable with a green (color is tbd) 2 pin connector at one end.
6. Locate the grey 4-wire encoder cable attached to the operator.
7. Pull the encoder cable into the junction box through the cord grip (on back side of junction box - include diagram).
8. Route the encoder cable, power cable, data cable, and cable tension monitor wire through the conduit to the wall controller.
   Keep the connector end at the powerhead. Route the loose end down to the door controller.

   Use the slots in the lower surface of the junction box along with cable ties as strain reliefs for the cables.

   NOTE: *All wires will fit in a single 1/2" conduit , but two 1/2" conduits can be used if desired.*
9. Plug the 5-pin and 2-pin connectors into the inverter board (picture of inverter board is needed as reference).

INPUT VOLTAGE SELECTION SWITCH

NOTE: All units are set for 240 volt AC input. If input voltage is 120VAC then remove violator label and toggle switch to 120V position. (NEED REFERENCE).

Put violator labels back on after selection.

PROOF 1

CONNECT THE HOIST RELEASE

NEED TEXT

ART NOT FINAL NEED REF

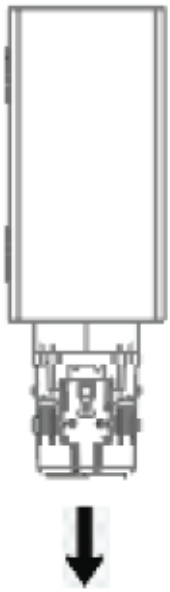

INSTALLATION

⚠ WARNING

To prevent possible SERIOUS INJURY or DEATH from electrocution:

- Be sure power is NOT connected BEFORE installing the door control station.

To prevent possible SERIOUS INJURY or DEATH from a closing door:

- Install the door control within sight of the door, out of reach of small children, at a minimum height of 5 feet (1.5 m) above landings, steps, or any other adjacent walking surface, and away from ALL moving parts of the door.
- Install the control station far enough from the door to prevent the user from coming in contact with the door while operating the controls.
- Install the entrapment warning placard on the wall next to the control station in a prominent location visible from the door.
- NEVER permit children to operate or play with door control push buttons or remote controls.
- Activate a door ONLY when it can be seen clearly, is properly adjusted and no obstructions exists in the path the door will travel.
- ALWAYS keep the door in sight until completely closed. NEVER permit anyone to cross path of a closing door.

MOUNTING THE CONTROLLER

1. Using appropriate mounting hardware (not supplied), mount the controller to the wall near the operator at least 5 feet (1.5m) above floors, landings, steps, or any other adjacent walking surface. This minimum distance should be measured from the ground to the bottom of the Stop button.
   The installation surface must be smooth and flat.
2. Fasten the entrapment warning placard next to the controller.

PROOF

Fig. 1

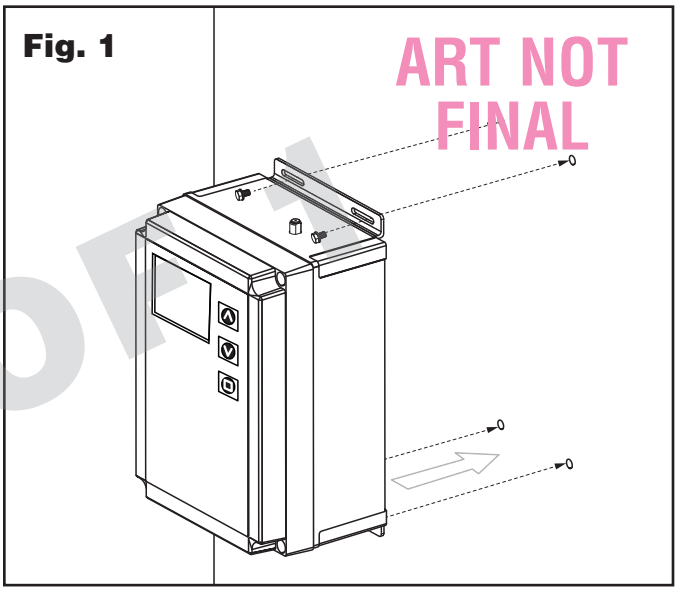

Fig. 2

CONTROLLER SPECIFICATIONS

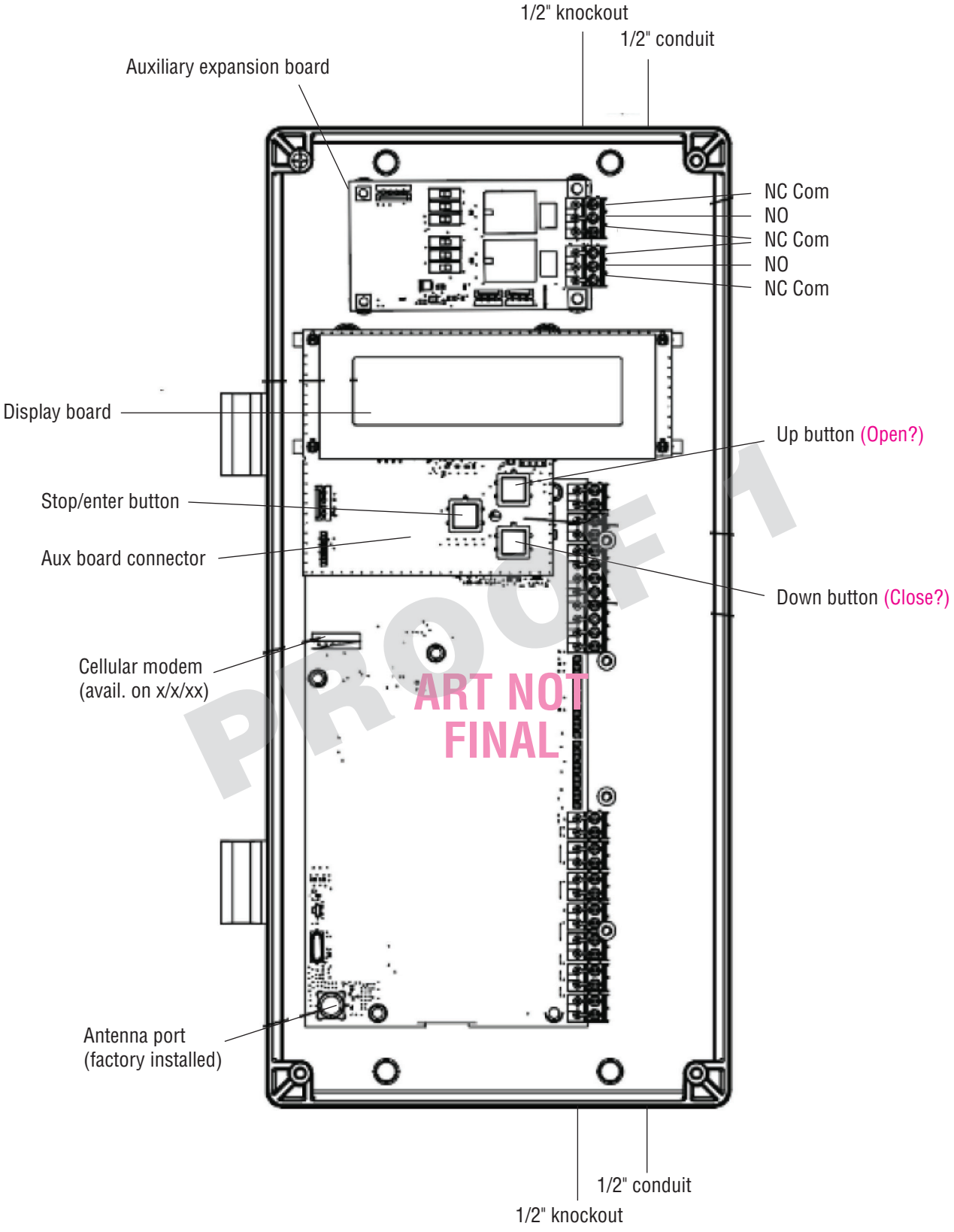

PROOF 1
ART NOT FINAL

FIELD WIRING

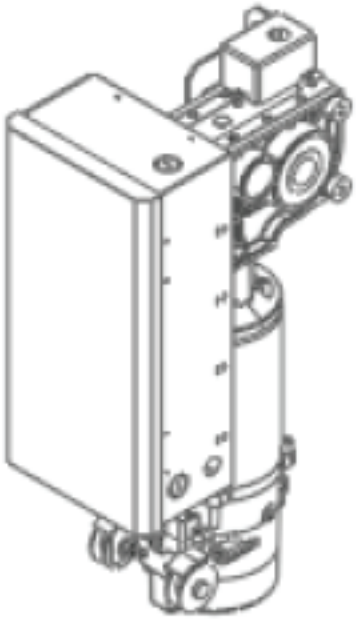

THIS AND THE NEXT THREE PAGES ARE PLACE HOLDERS FOR DIAGRAMS SHOWING A STEP BY STEP WIRING OF THE CONTROLLER, AND IS VERY DIFFERENT FROM THE VFOH.

THIS CONTENT WILL NEED TO BE PROVIDED

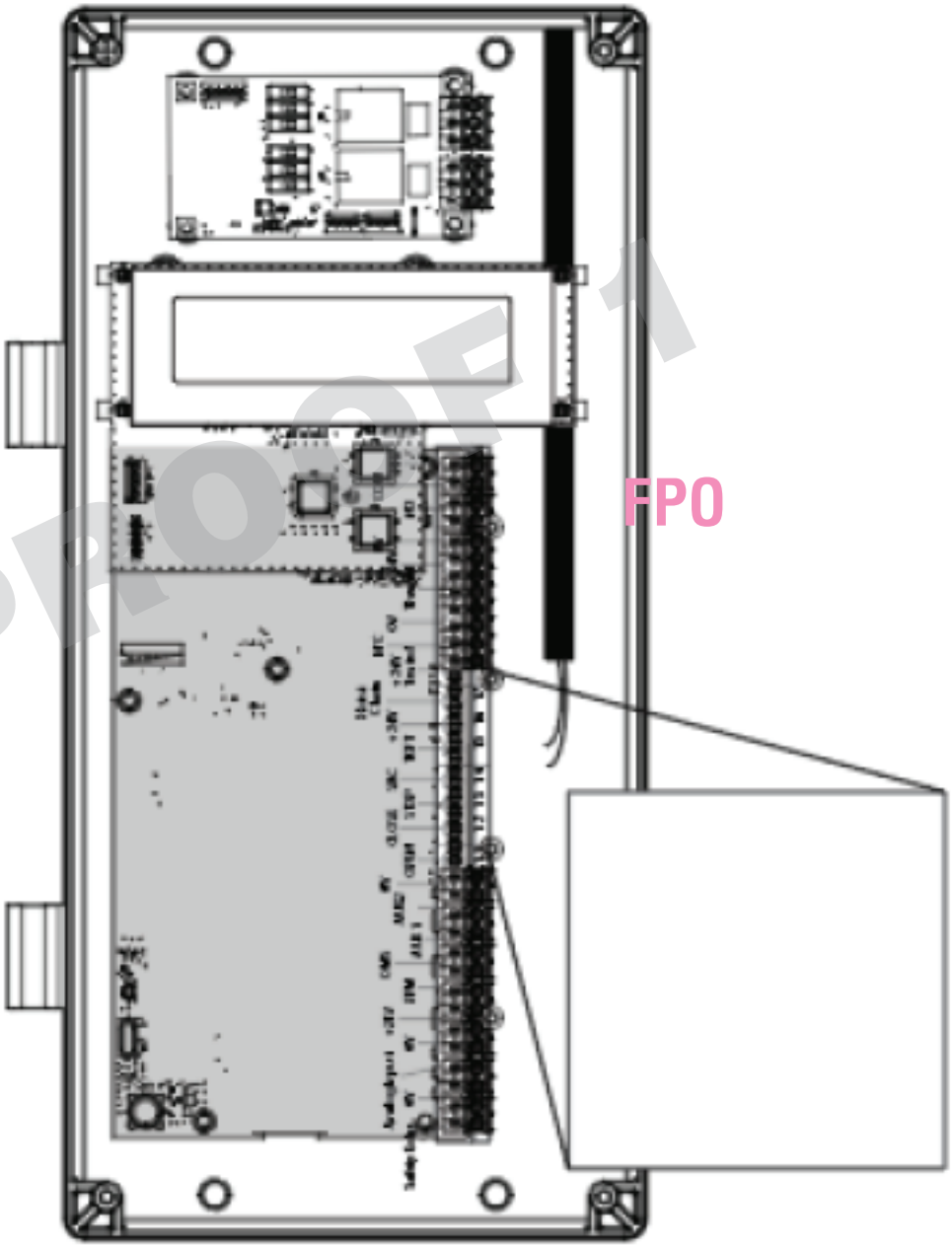

PROOF 1

FIELD WIRING

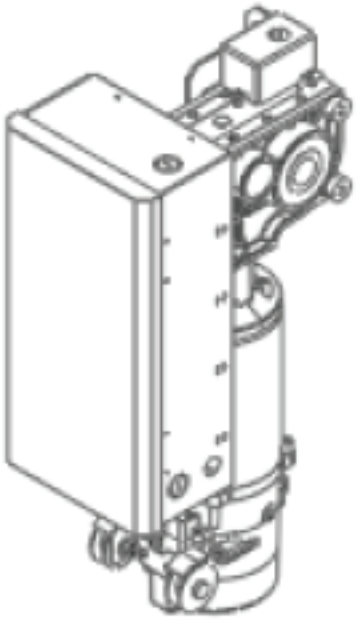

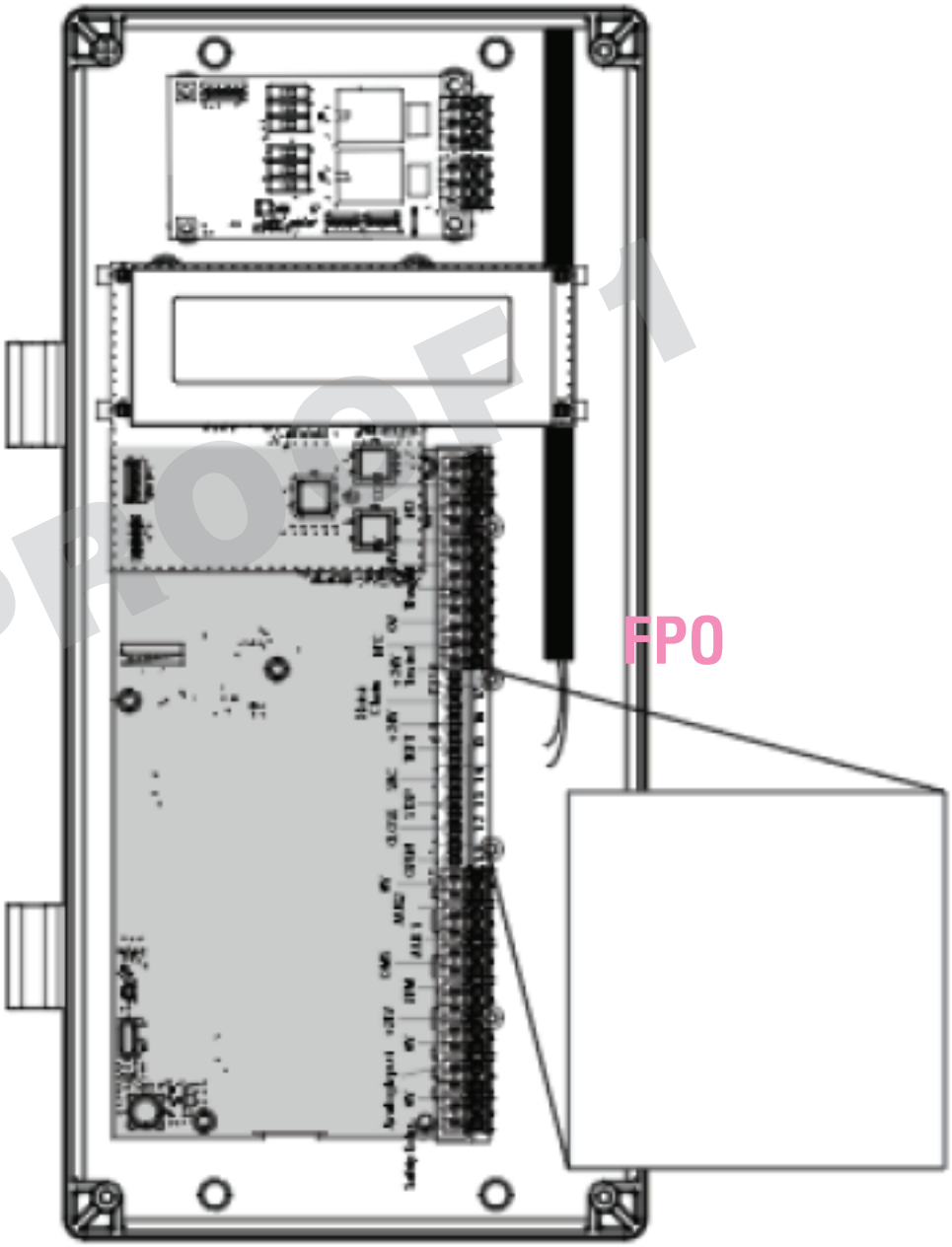

PROOF 1

FIELD WIRING

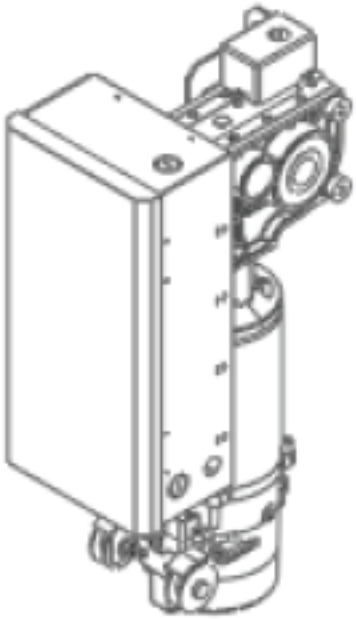

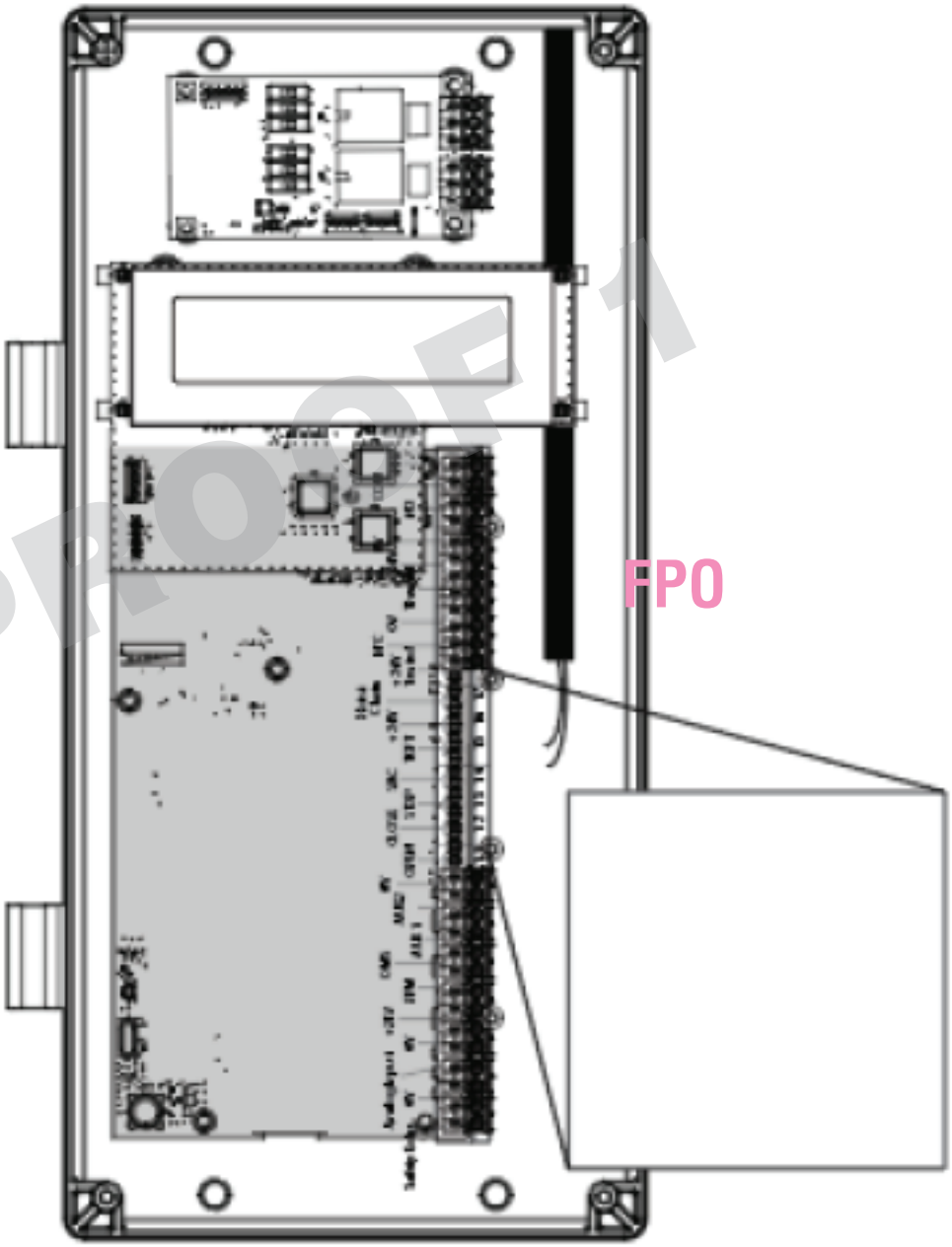

PROOF 1

FIELD WIRING

WIRING INCOMING POWER TO THE CONTROLLER

1. Check the controller mains input power requirement from the controller to be installed. (120V or 240V)
   WARNING: Ensure input voltage selection switch is in the correct position.
2. Route conduit using Fig. 1 for selecting the recommended hole to bring the mains input power wiring inside the enclosure.
3. Bring appropriate gauge (recommended 12-14awg) mains incoming power wires to land them inside the controller as per instructions in the Power and Ground section.
   a. For single phase (120Vac/240Vac) mains incoming power, run the wires for line, neutral and earth ground.
   b. For 240Vac three phase, select two phase legs to use as line and neutral for controller L and N connections. Also include the earth ground connection. Multiple single phase loads must be evenly distributed between the 3 phases.
4. Make connection for mains Line and Neutral wires to the filter board L and N terminals as shown at right.
5. Check that the factory installed jumper is present between the L terminal and COM terminal at the brake relay as shown in Fig. 1 on page X.

NOTE: *The system may now be powered. Jump to* ***Initial Setup*** *on page XX of this manual.*

⚠ WARNING

To prevent damage to the controller:
- Ensure that incoming power is properly bonded to earth ground
- Verify voltage before making connections at the controller.
- Consult a licensed electrician for questions about grounding and load balancing.

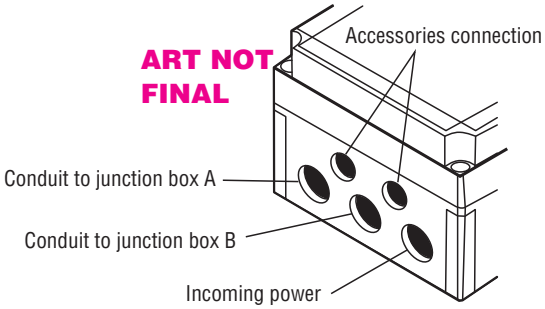

NEED REFERENCE FOR FILTER BOARD WIRING ILLUSTRATION

PROOF 1

FIELD WIRING

3-PHASE STEP-DOWN TRANSFORMER WIRING

1. Make sure the transformer is fully installed and secured with proper hardware.
2. Make sure all conduit routing is complete and terminated as needed.
3. The stepdown transformer accepts a 3-phase input and has a single phase output. The transformer primary connects to the L1 and L2 terminals. L3 is not connected and wiring mains power to L3 is optional. For sites with multiple operators, loads must be evenly distributed between the 3 phases.

   The stepdown transformer is dual input. It has separate 3-Phase terminals for 575Vac and 460Vac inputs. Only one input voltage may be connected at time. Determine which input voltage is to be used.
4. To connect a 575Vac input, remove ONLY the 575V 3-Phase violator label. Connect 12-14awg wire to terminals 1 (L1), 2 (L2) and 3 (L3) (optional). Connect the earth ground to the ground lug on the left side of the enclosure. (Fig. 1)
5. To connect a 460Vac input, remove ONLY the 460V 3-Phase violator label. Connect 12-14awg wire to terminals 4 (L1), 5 (L2) and 6 (L3) (optional). Connect the earth ground to the ground lug on the left side of the enclosure. (Fig. 2)
6. To connect a 240Vac output, remove the 230V violator label and connect 12-14awg wires to terminals 7 (L) and 8 (N). Connect an earth ground wire to the ground lug on the right side of the enclosure. (Fig. 3)
7. Before connecting the output to the powerhead, apply power to the transformer and ensure the output voltage at terminals 7 and 8 is 240Vac +/- 10%.

   WARNING: Connecting 575Vac to the 460Vac terminals will result in excessive high voltage at the transformer output and damage the powerhead.
8. Remove power from the transformer and route the output wires to the controller. Follow the instructions for connecting single phase power and ground.

Fig. 1 575V 3-PHASE INPUT

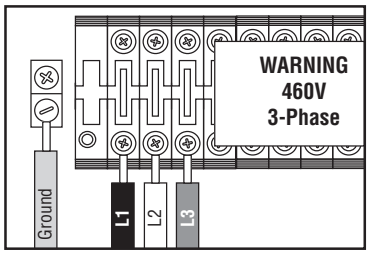

Fig. 2 460V 3-PHASE INPUT

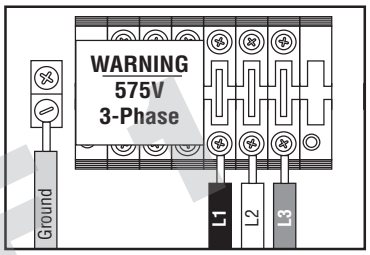

Fig. 3 240V 1-PHASE OUTPUT

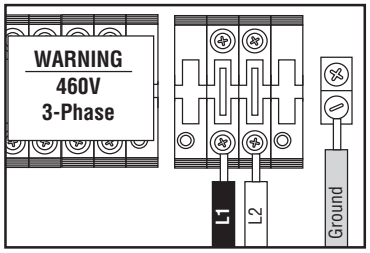

PROOF

ENTRAPMENT PROTECTION

LIFTMASTER MONITORED ENTRAPMENT PROTECTION (LMEP)

IMPORTANT INFORMATION ABOUT THE LIFTMASTER MONITORED ENTRAPMENT PROTECTION DEVICES

A LiftMaster Monitored Entrapment Protection (LMEP) Device is required for most operating modes (refer to page 29). If a LiftMaster Monitored Entrapment Protection Device is not installed, constant pressure to close will be required from the control station.

Refer to Accessories section for a complete list of LMEP Devices.

Three LMEP terminals are provided. Each terminal can accept ONE LMEP device. For easy LMEP installation, the correct terminals are yellow.

ART NOT FINAL
NEED REFERENCE FOR BOARD

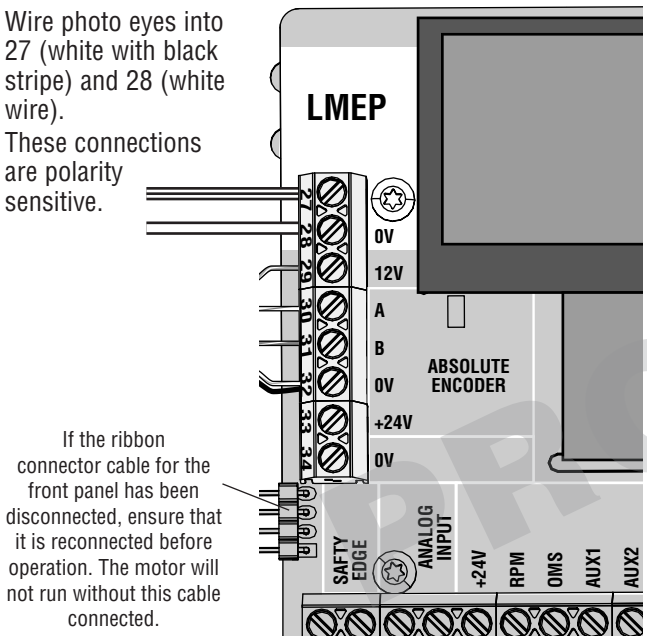

⚠ WARNING

To prevent possible SERIOUS INJURY or DEATH from a closing door:

- Be sure power is NOT connected to the door operator BEFORE installing the LiftMaster Monitored Entrapment Protection Device(s).
- The door MUST be in the fully opened or closed position BEFORE installing the LiftMaster Monitored Entrapment Protection Device(s).

To prevent SERIOUS INJURY, DEATH, ENTRAPMENT, or PROPERTY DAMAGE:

- Correctly connect and align the photoelectric sensor.
- Install the primary monitored photoelectric sensor beam NO HIGHER than 6" (15 cm) above the floor.
- This is a required LMEP Device for B2, TS, FSTS, and T operating modes and MUST NOT be disabled. For C2 and D1 wiring the installation of an entrapment protection device is recommended.
- LiftMaster Monitored Entrapment Protection Devices are for use with LiftMaster commercial door operators ONLY. Use with ANY other product voids the warranty.
- If an edge sensor is being used on a vertical moving door, place edge sensors on the bottom edge of the door.

PROOF

TYPICAL ENTRAPMENT PROTECTION DEVICE(S) OVERVIEW

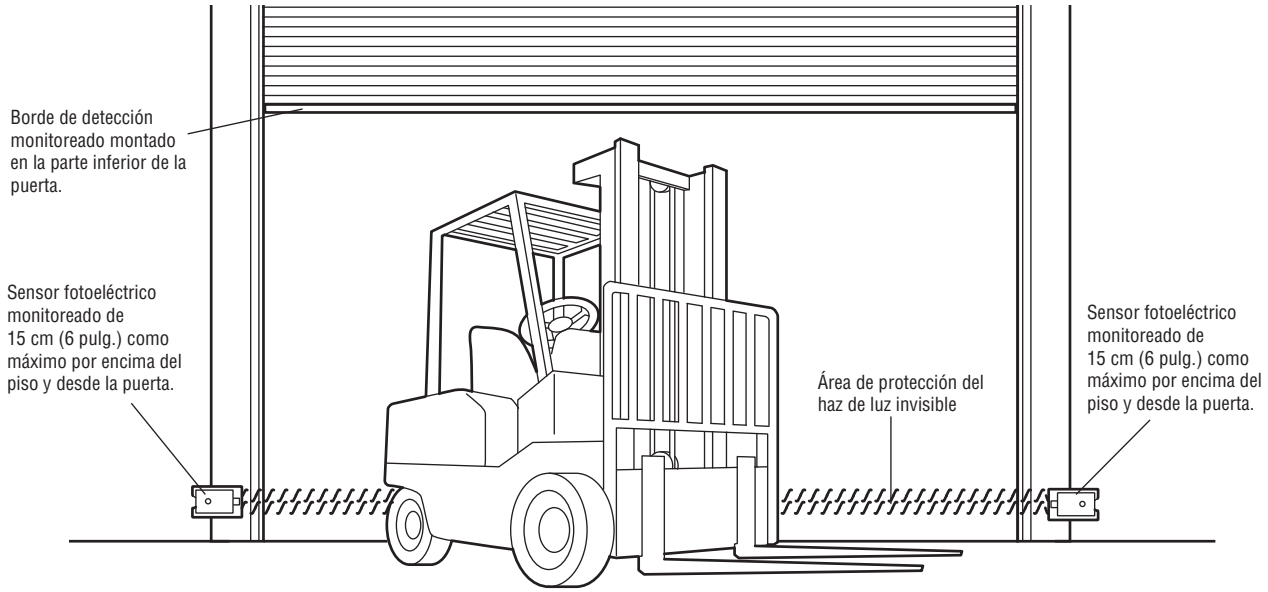

IMPORTANT SAFETY INSTRUCTIONS

⚠ WARNING

TO REDUCE THE RISK OF SEVERE INJURY OR DEATH:

1. READ AND FOLLOW ALL WARNINGS AND INSTRUCTIONS.
2. ALWAYS keep remote controls out of reach of children. NEVER permit children to operate or play with door control push buttons or remote controls.
3. ONLY activate a door when it can be seen clearly, it is properly adjusted and no obstructions exist in the path the door will travel.
4. Personnel should keep away from a door in motion and ALWAYS keep a door in sight until completely closed. NO ONE SHOULD CROSS THE PATH OF A MOVING DOOR.
5. NO ONE SHOULD GO UNDER A STOPPED OR PARTIALLY OPENED DOOR.
6. If possible, use the manual release handle to disengage a door ONLY when a door is CLOSED. Weak or broken springs or an unbalanced door could result in an open door falling rapidly and/or unexpectedly causing SEVERE INJURY or DEATH.
7. NEVER use manual release handle unless the doorway is clear of persons and obstructions.
8. After ANY adjustments are made, the entrapment protection device(s) MUST be tested. Failure to adjust the operator properly may cause SEVERE INJURY and DEATH.
9. Entrapment protection device(s) MUST be tested every month. Failure to adjust the operator properly may cause SEVERE INJURY and DEATH.
10. ALWAYS KEEP DOOR PROPERLY BALANCED. An improperly balanced door may NOT reverse when required and could result in SEVERE INJURY or DEATH. See the door manufacturer's owners manual.
11. ALL repairs to cables, spring assemblies and other hardware, ALL of which are under EXTREME tension, MUST be made by an Authorized Service Technician.
12. ALWAYS disconnect electric power to the door operator BEFORE making ANY repairs or removing covers.
13. **SAVE THESE INSTRUCTIONS.**

PROOF 1

PROFILE

When first activating your operator and entering programming mode, the controller will ask you to set the Profile before you can continue. Set the horsepower of your unit and return to the main menu.

FLOWCHART WILL BE ADDED AFTER THIS PAGE. TEAM STILL HAS NOT FINALIZED.

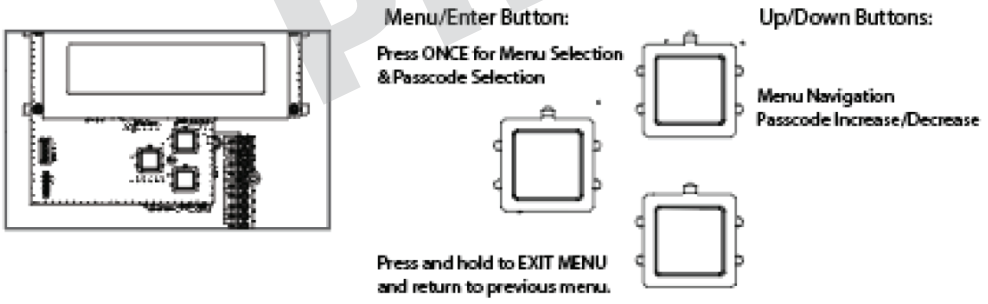

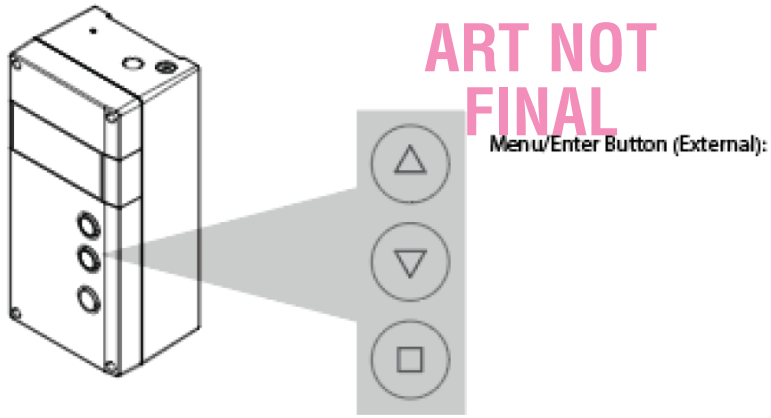

INSTALLER PASSCODE

224

The Installer passcode is required to access important features of the operator system.

Do not share this password with unauthorized individuals.

PROGRAMMING

⚠ WARNING

To prevent possible SERIOUS INJURY or DEATH:
- Disconnect electric power BEFORE performing ANY adjustments or maintenance.
- ALL maintenance MUST be performed by a trained door systems technician.
- Please wait several seconds for capacitors to discharge and for display to go out.

INITIAL COMMISSIONING

Step	Display	Actions
1	Quick Setup Use Up and Down Quick Setup Jog Door to Center Quick Setup Press Enter When Finished	Use the UP and DOWN Buttons to move the door to near the center of travel. Note: The door may travel in the opposite direction of the button pressed. This is okay and is corrected in a later step. Press ENTER when finished.
2	Quick Setup Press and Hold Up to Open Door Quick Setup Check Door Direction Quick Setup Door Will Stop Automatically	Press and hold the UP Button until the door stops automatically.
3	Quick Setup Did Door Open? Quick Setup Press Up For Yes Quick Setup Press Down For No	When the door has stopped, follow the on screen prompts to confirm the door's travel direction. (If Down For No was pressed because the door did not move up (open), two of the motor wires must be swapped to change motor direction. Swap the U and V wires at the motor output terminal block.)* Repeat the process of learning limits.
4	Open Limit Use Up and Down Open Limit Jog Door To Open Limit Open Limit Press Enter When Finished	Using the UP Button, move the door to the desired fully open position. Press Enter to store.
5	Close Limit Use Up and Down Close Limit Jog Door To Open Limit Close Limit Press Enter When Finished	Then, using the DOWN Button, move the door to the desired fully closed position. Press Enter to store.

STILL NEED SCREENS FOR INITIAL COMMISSIONING PROCESS

PROOF

PROGRAMMING

MENUS

INSTALLER PASSCODE
224

To enter program mode from the front panel buttons, press and hold Stop, Open and Close together for 3 seconds. The screen will display "Control By Buttons". The Stop button functions as Enter and the Open and Close buttons function as Up and Down. If no button is pressed for 30 seconds the controller will exit this programming mode.

The internal Menu/Enter, Up, and Down buttons are always active for programming.

The main menu is displayed as graphic icons on the display. The sub menus below the main menu are "text listed" menus.

The sub menus below the main menu are “text listed” menus.

- Menus are navigated using the UP, DOWN and MENU/ENTER buttons.
- A menu or submenu is entered by a short press of the MENU/ENTER button.
- A short press of the MENU/ENTER Button while inside of a submenu will confirm a selection.
- A long press of the MENU/ENTER Button will exit the submenu or menu.

NOTE: If a setting is changed, and then a long press of MENU/ENTER is made, the setting will NOT be saved.

NOTE: If any menu except System Status is accessed, door operation is halted until the menu is exited.

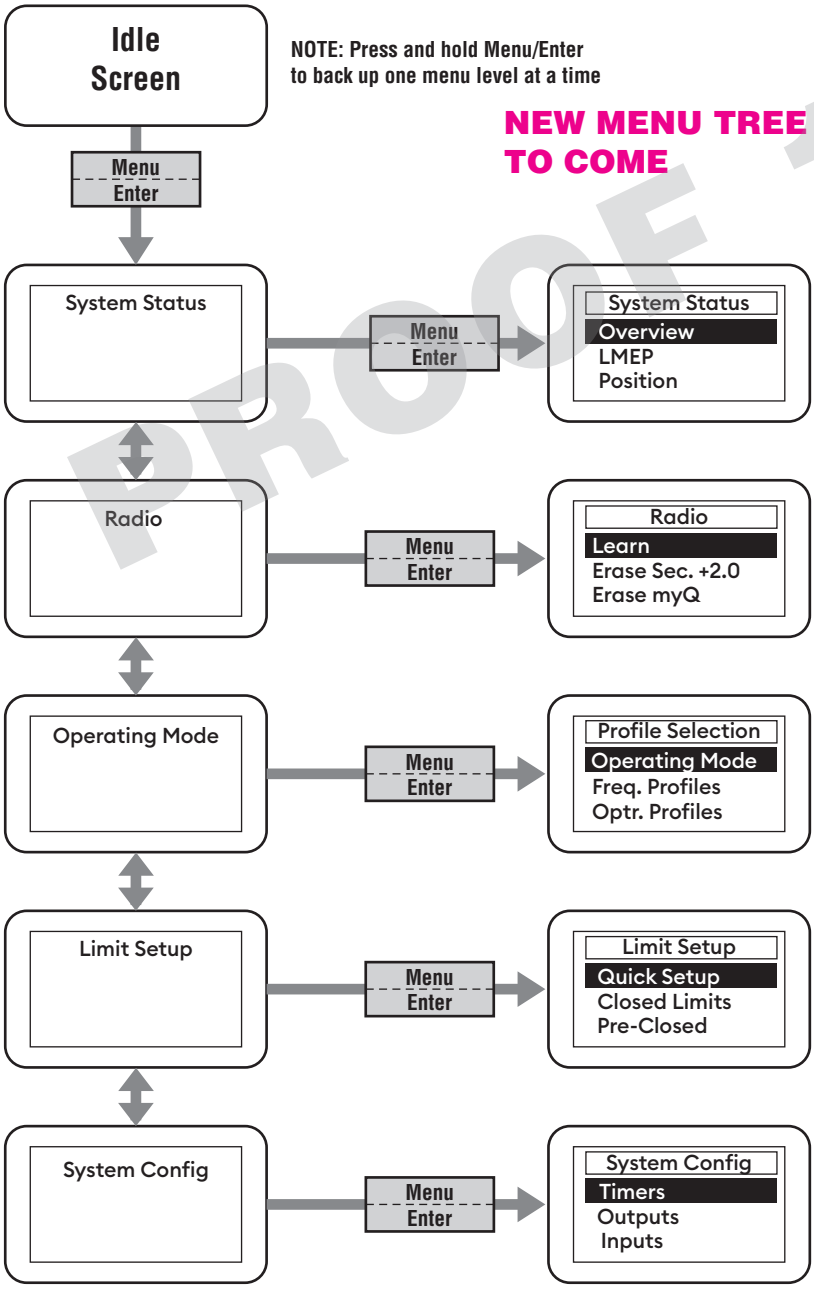

PROOF 1

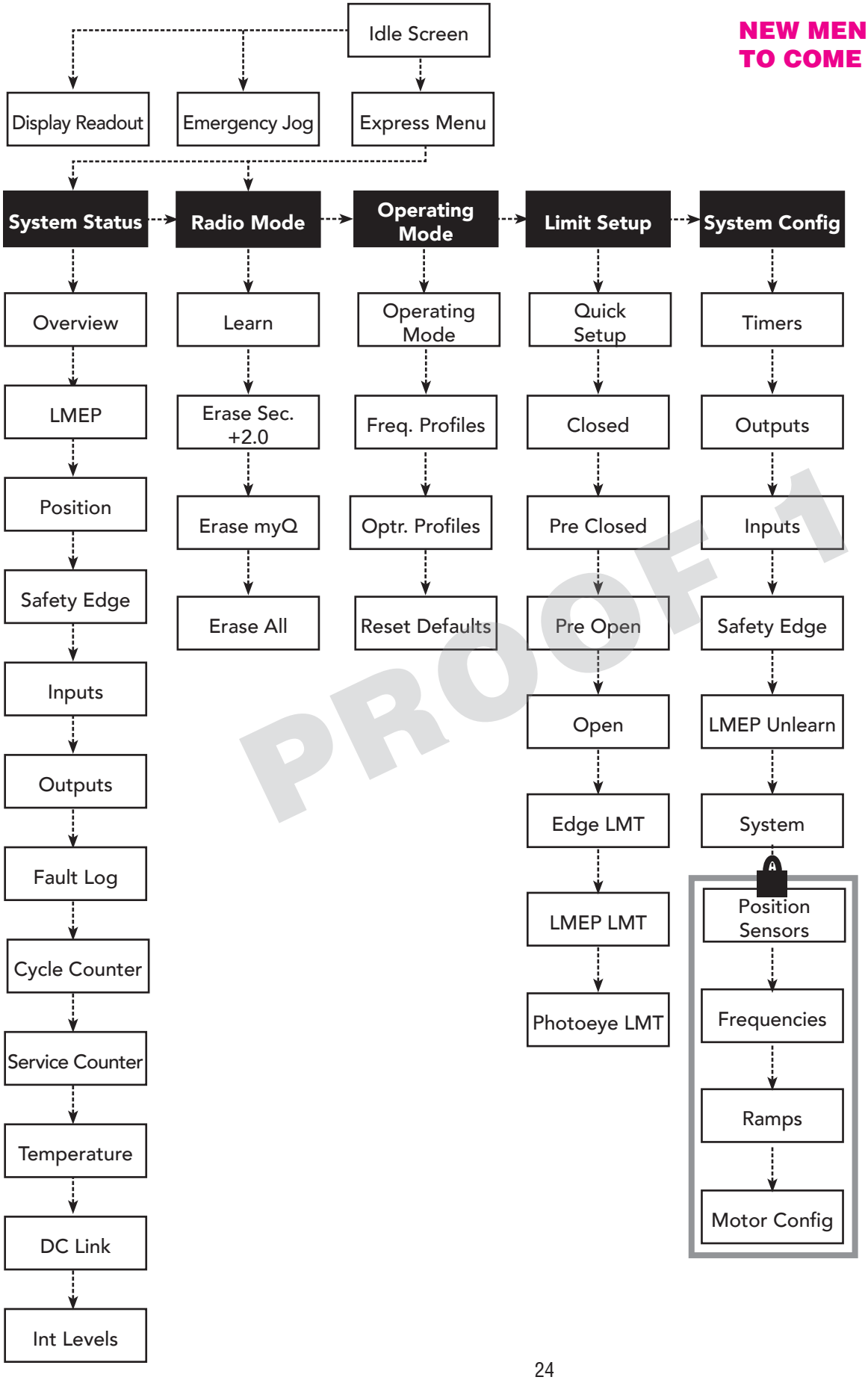

NEW MENU TREE TO COME

MAIN MENU OPTIONS

NOTE: Position Sensor, Frequencies, Ramps and Motor Config menus are not accessible with the Installer passcode

PROOF 1

PROGRAMMING

PROFILE SELECTION

To simplify installation this operator contains preset defaults called profiles. Each profile contains the manufacturer's recommended initial settings for a particular operator model.

These profiles allow an installer to quickly set up a door.

After a profile has been loaded the controller can be further adjusted to meet a specific customer's requirements as needed, such as timer settings, input configurations and other options.

NOTE: *Loading a profile will cause all related parameters to be overwritten with the defaults of the loaded profile!*

Operating Mode

A	B
C	D

RESET DEFAULTS

To reset a controller to factory default values use menu path: Operating Modes – Reset Defaults

NOTE: Learned radio devices and cycle counters are not affected by Reset Defaults

PARAMETER	DEFAULT VALUE
Operating Mode	B2
Frequency Profile	TBD
Open Frequency	TBD
Close Frequency	TBD
Limits	Must relearn limits
LMEP LMT	Close Limit
EDGE LMT	Close Limit
PHOTOEYE LMT	Close Limit
Timer to Close	15
Delay to Open	0
Delay to Close	0
Open Alarm	0
Input Stuck Timer	120
INP1 Function	No Function
INP1 Logic	N.O.
INP2 Function	No Function
INP2 Logic	N.O.
INP3 Function	No Function
INP3 Logic	N.O.
LMEP	Unlearned
Service Counter Interval	5000
Service Counter Value	Is not reset
Absolute Cycle Counter	Is not reset

PROOF 1

PROGRAMMING

THIS PAGE IS BEING UPDATED
PER ANDERS MELBERG

OPERATING MODES

This operator is programmed to function in one of six different operating modes.

B2 Mode:

- Works with a 3-Button Control Station wired and 3-Button Radio control, momentary to open,stop, and close.
- Single Button Control and Single Button Radio momentary to open, stop, close, and stop & reverse.
- LMEP device required to be learned and connected for downward movement.
- A LMEP obstruction will reverse the door to its Open limit. The safety obstruction can be overridden with 5 seconds of constant pressure on the Down button.

C2 Mode:

- Works with a 3-Button Control Station wired and 3-Button Radio control, momentary to open, stop, and constant pressure to close.
- Single Button Control and Single Button Radio momentary to open, stop, and stop & reverse.
- Works without a LMEP device learned, but can operate if a LMEP is learned and connected for downward movement.
- A LMEP obstruction will reverse the door to its Open limit. The safety obstruction can be overridden with 5 seconds constant pressure on the Down button.
- Constant Pressure to Close is not an available feature from a remote control device.

T Mode:

- Works with 3-Button Control Station wired and 3-Button Radio control, momentary to open, stop, close (TTC enabled).
- If the door is at the OLS or at a mid-stop, it will close after the TTC time-out.
- The CLOSE button overrides the TTC for immediate closing of the door. The STOP button cancels the TTC for that cycle (no automatic motion).
- If the door is obstructed by a safety device, the 3BCS must be used to close the door. TTC will be disabled if the door reverses from an obstruction.
- Single Button Control and Single Button Radio momentary to open, stop, and stop & reverse. Constant pressure or momentary input resets the TTC timer.
- A LMEP device is required to be learned and connected for downward movement.
- A LMEP obstruction will reverse the door to its Open limit (no automatic motion). The safety obstruction can be overridden with 5 seconds of constant pressure on the Down button. The user can select a desired Timer to Close (TTC) timer under the Timers menu. See page 35 for Timers setting details.

TS Mode:

- Functions the same as T Mode except it always attempts to close the door from any time the door is open.
- A LMEP obstruction will reverse the door to its Open limit (TTC will be enabled).
- The controller will make infinite attempts to close the door until the safety obstruction is cleared. A safety obstruction can be overridden with 5 seconds of constant pressure on the Down button.

D1 Mode:

- Constant contact to open and close with wiring for sensing device to stop

E2 Mode:

- Constant pressure is required on the close button, if a close button is released before the door is fully closed the door will return to the open position. Use of a safety edge will allow you to override close button. A single button to open and close cannot be used.

If a user attempts to select an Operating Mode that requires an LMEP, and an LMEP is not connected, that selection will be unavailable. The following screen will be displayed.

Operating Mode **Requires LMEP**

PROOF 1

PROGRAMMING

PROGRAMMING / FREQUENCY PROFILES

The controller contains three preconfigured frequency profiles that control the motor speed, as well as the acceleration and deceleration ramps. These profiles cannot be manually altered. If accelerations or decelerations are too high, reduce the frequency profile to a lower setting.

Medium is the default setting for all profiles.

THIS SECTION REQUIES NEW PROFILE DETAILS FROM TEAM

FREQUENCY (SPEED) PROFILE SETTINGS

DIRECTION	LOW	MEDIUM	HIGH
Open	30	60	90
Close	30	40	60

To Change the frequency profile setting, select Operating Modes – Freq. Profiles.

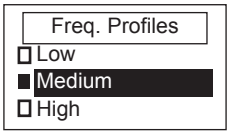

A checkbox indicates which frequency profile is currently active.

Choose either the Low, Medium or High setting.

The screen will display Loading Frequency Profile and then return to the top menu.

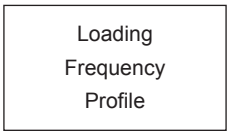

PROOF 1

SETTING THE OPEN MID-STOP

This operator allows for the programming of a single mid-stop door position.

To set the open mid-stop position:

1. In Programming Mode, go to Door Postion => Open Mid-Stop or Close Mid-Stop.
2. Use the Up/Down buttons to move the door to the desired position.
3. Save = Enter

To erase the mid-stop, select Erase Open Mid-Stop or Erase Close-Mid Stop option. Save=Enter.

NOTE: *Restoring defaults or resetting limits will erase the mid-stop position.*

PROGRAMMING

RADIO

The controller has a built in Security+ 2.0® radio receiver, that can program up to 90 remote control devices and up to 30 keyless entry devices.

PROGRAMMING REMOTE CONTROLS

Select **Radio** from the main menu (this action will require installer passcode entry).
From the Radio menu, select LEARN.

Select the desired function: SBC, Open, Close, Stop or myQ® Device.

When the screen displays “Looking for Devices”, press the desired transmitter button or press the learn button on your myQ® Device.

The screen will display “**Device learned**” and then return to the function list. The transmitter button is now programmed to the controller.

Repeat as needed for other transmitter buttons and devices. For example, a 3-button remote can be learned as Open, Close, Stop by programming each button to that function.

NOTE: Transmitters can only be programmed individually, not in batches.

If the radio controls are not working, verify that the black cable to the radio board is plugged in securely. Additonally, check that the black radio cable is wired properly into the board (see Fig. 1).

ERASING PROGRAMMED DEVICES

1. Select Radio from the main menu (enter passcode).
2. Select Erase.
3. Select the type of device to be erased or select "Erase all".
4. Press "UP" button to erase the selected device.
5. Display will confirm erasing selected device.

PROOF 1

NOTICE: This device complies with part 15 of the FCC rules and Innovation, Science and Economic Development Canada license-exempt RSSs. Operation is subject to the following two conditions: (1) this device may not cause harmful interference, and (2) this device must accept any interference received, including interference that may cause undesired operation.

Any changes or modifications not expressly approved by the party responsible for compliance could void the user’s authority to operate the equipment.

This device must be installed to ensure a minimum 20 cm (8 in.) distance is maintained between users/bystanders and device.

This device has been tested and found to comply with the limits for a Class A digital device, pursuant to part 15 of the FCC rules and Industry Canada ICES standard. These limits are designed to provide reasonable protection against harmful interference in a commercial installation. This equipment generates, uses and can radiate radio frequency energy and, if not installed and used in accordance with the instructions, may cause harmful interference to radio communications. However, there is no guarantee that interference will not occur in a particular installation. If this equipment does cause harmful interference to radio or television reception, which can be determined by turning the equipment off and on, the user is encouraged to try to correct the interference by one or more of the following measures:

- **Reorient or relocate the receiving antenna.**
- **Increase the separation between the equipment and receiver.**
- **Connect the equipment into an outlet on a circuit different from that to which the receiver is connected.**
- **Consult the dealer or an experienced radio/TV technician for help.**

PROGRAMMING

myQ® SMART FACILITY ACCESS

One Platform to manage access for Unlimited Facilities, Users and Vehicles

myQ® Smart Facility Access allows you to control all your access points in the facility from the myQ® website application from anywhere. Monitor & control your vehicular access doors, gated entry locations & even dock positions from a universal platform. myQ® technology uses a 900Mhz signal or a Wi-Fi connection to communicate securly from your connected devices to myQ® enabled accessories or directly to a Wi-Fi network.

SETUP A myQ® SMART FACILITY ACCESS ACCOUNT

NOTE: If you have an existing myQ® account, your myQ® Business™ account will have the same password.

1. If you do not have a myQ® Business™ account, call LiftMaster Customer Care at 800.323.2276 to activate a myQ® Business™ account.
2. You will get a welcome email from LiftMaster. Accept the invitation and register or login to your account.
3. Set up the Facility and add users & groups to provide access to the Facility (refer to the available Help in myQ® Business™).
4. Follow onscreen prompts to get your Variable Speed Door Operator and additional devices connected.

PROVISIONING WI-FI

Follow the below instructions to pair the operator:

1. Press the "**STOP/ENTER**" and "**DOWN**" buttons at the same time for 3 seconds to enter the operator menu.
1. Scroll down to "**SYSTEM SETTINGS**" with the "**UP**" and "**DOWN**" buttons and press "**ENTER**". You will be prompted to enter the password for the operator.
2. Enter #### as the password.
1. Scroll down to "**CONNECTIVITY**" and press "**ENTER**"
1. Press "**ENTER**" again to select "**CONNECTIVITY LEARN**".
1. Scroll down to "**LEARN WIFI**" and press "**ENTER**". The operator will now be in Learn Mode.

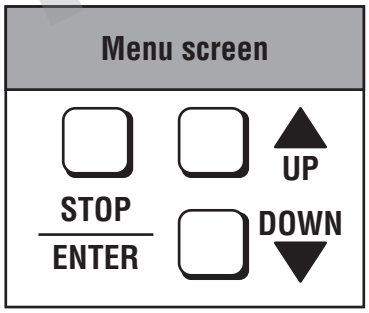

PROOF 1

DETERMINE AND SET OPERATING MODE

Select the operating mode for your application from the menu in the controller, see page 24.

WIRING TYPE	DEVICE	ACTION	STATE	RESPONSE
C2 Momentary contact to open and stop with constant pressure to close (wired devices ONLY), open override plus wiring for sensing device to reverse. Open Mid-Stop available (jumper must always be in place) with this mode type. Compatible with 3-Button Station and Single-Button Station	**Front panel buttons(membrane) and 3-Button Control Station**	OPEN button is pressed momentarily	Operator at OPEN limit	No change in state
			Operator at CLOSE limit	Door opens to the OPEN limit or Mid-Stop
			Door opening	No change in state
			Door closing	Door will auto reverse to OPEN limit (bypasses Mid-Stop)
			Door at Open Mid-Stop	Door opens to the OPEN limit
			Door stopped during open or close cycle	Door opens to the OPEN limit or Mid-Stop
		CLOSE button is pressed momentarily	Operator at OPEN limit	Door closes and stops when button is released
			Operator at CLOSE limit	No change in state
			Door opening	No change in state
			Door closing	No change in state
			Door at Open Mid-Stop	Door closes and stops when button is released
			Door stopped during open or close cycle	Door closes and stops when button is released
		STOP button is pressed momentarily	Operator at OPEN limit	No change in state
			Operator at CLOSE limit	No change in state
			Door opening	Door stops
			Door closing	Door stops
			Door at Open Mid-Stop	No change in state
			Door stopped during open or close cycle	No change in state
		OPEN button is held (constant pressure)	Operator at OPEN limit	No change in state
			Operator at CLOSE limit	Door opens to OPEN limit (bypasses Mid-Stop)
			Door opening	No change in state (bypasses Mid-Stop)
			Door closing	Door will auto reverse to OPEN limit (bypasses Mid-Stop)
			Door at Open Mid-Stop	Door opens to the OPEN limit
			Door stopped during open or close cycle	Door opens to the OPEN limit (bypasses Mid-Stop)
		CLOSE button is held (constant pressure)	Operator at OPEN limit	Door closes to the CLOSE limit
			Operator at CLOSE limit	No change in state
			Door opening	No change in state
			Door closing	No change in state
			Door at Open Mid-Stop	Door closes to the CLOSE limit
			Door stopped during open or close cycle	Door closes to the CLOSE limit
	3-Button Remote Control Programmed as OPEN/CLOSE/STOP	OPEN button is pressed momentarily	Operator at OPEN limit	No change in state
			Operator at CLOSE limit	Door opens to the OPEN limit or Mid-Stop
			Door opening	No change in state
			Door closing	Door will auto reverse to OPEN limit (bypasses Mid-Stop)
			Door at Open Mid-Stop	Door opens to the OPEN limit
			Door stopped during open or close cycle	Door opens to the OPEN limit or Mid-Stop
		CLOSE button is pressed momentarily	Operator at OPEN limit	No change in state
			Operator at CLOSE limit	No change in state
			Door opening	No change in state
			Door closing	No change in state
			Door at Open Mid-Stop	No change in state
			Door stopped during open or close cycle	No change in state
		STOP button is pressed momentarily	Operator at OPEN limit	No change in state
			Operator at CLOSE limit	No change in state
			Door opening	Door stops
			Door closing	Door stops
			Door at Open Mid-Stop	No change in state
			Door stopped during open or close cycle	No change in state
	Single Button Remote Control Programmed as SBC	Button is pressed	Operator at OPEN limit	No change in state
			Operator at CLOSE limit	Door opens to the OPEN limit or Mid-Stop
			Door opening	Door stops
			Door closing	Door will auto reverse to OPEN limit (bypasses Mid-Stop)
			Door at Open Mid-Stop	Door opens to the OPEN limit
			Door stopped during open cycle	No change in state
			Door stopped during close cycle	Door opens to the OPEN limit or Mid-Stop
	Single Button Control Station (Wired)	Button is pressed	Operator at OPEN limit	Door closes and stops when button is released
			Operator at CLOSE limit	Door opens to the OPEN limit or Mid-Stop
			Door opening	Door stops
			Door closing	Door will auto reverse to OPEN limit (bypasses Mid-Stop)
			Door at Open Mid-Stop	Door opens to the OPEN limit
			Door stopped during open cycle	Door closes and stops when button is released
			Door stopped during close cycle	Door opens to the OPEN limit or Mid-Stop
		Button is held (constant pressure)	Door Opening	No change in state (bypasses Mid-Stop)
	myQ® Smart Facility Access	Open is pressed	Operator at OPEN limit	No change in state
			Operator at CLOSE limit	Door opens to the OPEN limit or Mid-Stop
			Door opening	No change in state
			Door closing	Door will auto reverse to OPEN limit (bypasses Mid-Stop)
			Door at Open Mid-Stop	Door opens to the OPEN limit
			Door stopped during open or close cycle	Door opens to the OPEN limit or Mid-Stop
		Close is pressed	Operator at OPEN limit	No change in state
			Operator at CLOSE limit	No change in state
			Door opening	No change in state
			Door closing	No change in state
			Door at Open Mid-Stop	No change in state
			Door stopped during open or close cycle	No change in state

PROOF

DETERMINE AND SET OPERATING MODE (CONTINUED)

WIRING TYPE	DEVICE	ACTION	STATE	RESPONSE
B2 Momentary contact to open,close and stop, plus wiring for sensing device to reverse and auxiliary devices to open and close with open override. Programmable Mid-Stop available (jumper must always be in place) with this wiring type. Compatible with 3-Button Station, 1-Button Station, 1 and 3-Button Remote Control. LiftMaster Monitored Entrapment Protection (LMEP) Device required.	**Front panel buttons (membrane) and 3-Button Control Station**	OPEN button is pressed momentarily	Operator at OPEN limit	No change in state
			Operator at CLOSE limit	Door opens to the OPEN limit or Mid-Stop
			Door opening	No change in state
			Door closing	Door will auto reverse to OPEN limit (bypasses Mid-Stop)
			Door at Open Mid-Stop	Door opens to the OPEN limit
			Door stopped during open or close cycle	Door opens to the OPEN limit or Mid-Stop
		CLOSE button is pressed momentarily	Operator at OPEN limit	Door closes to the CLOSE limit
			Operator at CLOSE limit	No change in state
			Door opening	No change in state
			Door closing	No change in state
			Door at Open Mid-Stop	Door closes to the CLOSE limit
			Door stopped during open or close cycle	Door closes to the CLOSE limit
		STOP button is pressed momentarily	Operator at OPEN limit	No change in state
			Operator at CLOSE limit	No change in state
			Door opening	Door stops
			Door closing	Door stops
			Door at Open Mid-Stop	No change in state
			Door stopped during open or close cycle	No change in state
		OPEN button is held (constant pressure)	Operator at OPEN limit	No change in state
			Operator at CLOSE limit	Door opens to the OPEN limit (bypasses Mid-Stop)
			Door opening	No change in state (bypasses Mid-Stop)
			Door closing	Door will auto reverse to OPEN limit (bypasses Mid-Stop)
			Door at Open Mid-Stop	Door opens to the OPEN limit
			Door stopped during open or close cycle	Door opens to the OPEN limit (bypasses Mid-Stop)
		CLOSE button is held (constant pressure)	Operator at OPEN limit	Door closes to the CLOSE limit
			Operator at CLOSE limit	No change in state
			Door opening	No change in state
			Door closing	No change in state
			Door at Open Mid-Stop	Door closes to the CLOSE limit
			Door stopped during open or close cycle	Door closes to the CLOSE limit
	3-Button Remote Control Programmed as OPEN/CLOSE/STOP	OPEN button is pressed momentarily	Operator at OPEN limit	No change in state
			Operator at CLOSE limit	Door opens to closest OPEN limit or Mid-Stop
			Door opening	No change in state
			Door closing	Door will auto reverse to OPEN limit (bypasses Mid-Stop)
			Door at Open Mid-Stop	Door opens to the OPEN limit
			Door stopped during open or close cycle	Door opens to the OPEN limit
		CLOSE button is pressed momentarily	Operator at OPEN limit	Door closes to the CLOSE limit
			Operator at CLOSE limit	No change in state
			Door opening	No change in state
			Door closing	No change in state
			Door at Open Mid-Stop	Door closes to the CLOSE limit
			Door stopped during open or close cycle	Door closes to the CLOSE limit
		STOP button is pressed momentarily	Operator at OPEN limit	No change in state
			Operator at CLOSE limit	No change in state
			Door opening	Door stops
			Door closing	Door stops
			Door at Open Mid-Stop	No change in state
			Door stopped during open or close cycle	No change in state
	Single Button Remote Control Programmed as SBC	Button is pressed	Operator at OPEN limit	Door closes to the CLOSE limit
			Operator at CLOSE limit	Door opens to the OPEN limit or Mid-Stop
			Door opening	Door stops
			Door closing	Door will auto reverse to OPEN limit (bypasses Mid-Stop)
			Door at Open Mid-Stop	Door opens to the OPEN limit
			Door stopped during the open cycle	Door closes to the CLOSE limit
			Door stopped during the close cycle	Door opens to the OPEN limit or Mid-Stop
	Single Button Control Station (Wired)	Button is pressed	Operator at OPEN limit	Door closes to the CLOSE limit
			Operator at CLOSE limit	Door opens to the OPEN limit or Mid-Stop
			Door opening	Door stops
			Door closing	Door will auto reverse to OPEN limit (bypasses Mid-Stop)
			Door at Open Mid-Stop	Door opens to the OPEN limit
			Door stopped during the open cycle	Door closes to the CLOSE limit
			Door stopped during the close cycle	Door opens to the OPEN limit or Mid-Stop
		Button is held (constant pressure)	Door Opening	No change in state (bypasses Mid-Stop)
	myQ® Smart Facility Access	Open is pressed	Operator at OPEN limit	No change in state
			Operator at CLOSE limit	Door opens to the OPEN limit or Mid-Stop
			Door opening	No change in state
			Door closing	Door will auto reverse to OPEN limit (bypasses Mid-Stop)
			Door at Open Mid-Stop	Door opens to the OPEN limit
			Door stopped during open or close cycle	Door opens to the OPEN limit or Mid-Stop
		Close is pressed:	Operator at OPEN limit	Door closes to the CLOSE limit
			Operator at CLOSE limit	No change in state
			Door opening	No change in state
			Door closing	No change in state
			Door at Open Mid-Stop	Door closes to the CLOSE limit
			Door stopped during open or close cycle	Door closes to the CLOSE limit

PROOF

DETERMINE AND SET OPERATING MODE (CONTINUED)

WIRING TYPE	DEVICE	ACTION	STATE	RESPONSE
T This mode will attempt to close the door from any position except when fully closed, or when a safety input is present. The Timer defeat input holds the timer in reset if the TTC is running. Momentary contact to open, close, and stop, with open override and Timer-To-Close (TTC). Every device that causes the door to open, except any sensing edge input device, activates the TTC. Auxiliary controls can be connected to open input to activate the TTC. If the TTC has been activated, the open button and radio control can recycle the timer. The stop button will deactivate the timer until the next command input. The TTC will function from the Open limit stop and Open Mid-Stop available (jumper must always be in place) with this mode type. Compatible with 3-Button Station, 1-Button Station and 1 and 3-Button Remote Control. LiftMaster Monitored Entrapment Protection (LMEP) Device required.	**Front panel buttons(membrane) and 3-Button Control Station**	OPEN button is pressed momentarily	Operator at OPEN limit	No change in state (Recycle timer)
			Operator at CLOSE limit	Door opens to the OPEN limit or Mid-Stop (and activates TTC)
			Door opening	No change in state
			Door closing	Door will auto reverse to OPEN limit (bypasses Mid-Stop) (and activates TTC)
			Door at Open Mid-Stop	Door opens to the OPEN limit (and activates TTC)
			Door stopped during open or close cycle	Door opens to the OPEN limit or Mid-Stop (and activates TTC)
		CLOSE button is pressed momentarily	Operator at OPEN limit	Door closes to the CLOSE limit
			Operator at CLOSE limit	No change in state
			Door opening	No change in state
			Door closing	No change in state
			Door at Open Mid-Stop	Door closes to the CLOSE limit
			Door stopped during open or close cycle	Door closes to the CLOSE limit
		STOP button is pressed momentarily	Operator at OPEN limit	No change in state (Deactivate timer)
			Operator at CLOSE limit	No change in state
			Door opening	Door stops
			Door closing	Door stops
			Door at Open Mid-Stop	No change in state (Deactivate timer)
			Door stopped during open or close cycle	No change in state
		OPEN button is held (constant pressure)	Operator at OPEN limit	No change in state (Recycle & hold timer)
			Operator at CLOSE limit	Door opens to the OPEN limit (bypasses Mid-Stop) and activates TTC
			Door opening	No change in state (bypasses Mid-Stop)
			Door closing	Door will auto reverse to OPEN limit (bypasses Mid-Stop) and activates TTC
			Door at Open Mid-Stop	Door opens to the OPEN limit and activates TTC
			Door stopped during open or close cycle	Door opens to the OPEN limit (bypasses Mid-Stop) and activates TTC
		CLOSE button is held (constant pressure)	Operator at OPEN limit	Door closes to the CLOSE limit
			Operator at CLOSE limit	No change in state
			Door opening	No change in state
			Door closing	No change in state
			Door at Open Mid-Stop	Door closes to the CLOSE limit
			Door stopped during open or close cycle	Door closes to the CLOSE limit
	3-Button Remote Control Programmed as OPEN/CLOSE/STOP	OPEN button is pressed momentarily	Operator at OPEN limit	No change in state (Recycle timer)
			Operator at CLOSE limit	Door opens to the OPEN limit or Mid-Stop and activates TTC
			Door opening	No change in state
			Door closing	Door will auto reverse to OPEN limit (bypasses Mid-Stop) and activates TTC
			Door at Open Mid-Stop	Door opens to the OPEN limit and activates TTC
			Door stopped during open or close cycle	Door opens to the OPEN limit or Mid-Stop and activates TTC
		CLOSE button is pressed momentarily	Operator at OPEN limit	Door closes to the CLOSE limit
			Operator at CLOSE limit	No change in state
			Door opening	No change in state
			Door closing	No change in state
			Door at Open Mid-Stop	Door closes to the CLOSE limit
			Door stopped during open or close cycle	Door closes to the CLOSE limit
		STOP button is pressed momentarily	Operator at OPEN limit	No change in state (Deactivate timer)
			Operator at CLOSE limit	No change in state
			Door opening	Door stops
			Door closing	Door stops
			Door at Open Mid-Stop	No change in state (Deactivate timer)
			Door stopped during open or close cycle	No change in state
	Single Button Remote Control Programmed as SBC	Button is pressed	Operator at OPEN limit	Door closes to the CLOSE limit
			Operator at CLOSE limit	Door opens to the OPEN limit or Mid-Stop and activates TTC
			Door opening	Door stops and activates TTC
			Door closing	Door will auto reverse to OPEN limit (bypasses Mid-Stop) and activates TTC
			Door at Open Mid-Stop	Door opens to the OPEN limit and activates TTC
			Door stopped during the open cycle	Door closes to the CLOSE limit
			Door stopped during the close cycle	Door opens to the OPEN limit or Mid-Stop and activates TTC
	Single Button Control Station (Wired)	Button is pressed	Operator at OPEN limit	Door closes to the CLOSE limit
			Operator at CLOSE limit	Door closes to the CLOSE limit
			Door opening	Door stops and activates TTC
			Door closing	Door will auto reverse to OPEN limit (bypasses Mid-Stop) and activates TTC
			Door at Open Mid-Stop	Door opens to the OPEN limit and activates TTC
			Door stopped during the open cycle	Door closes to the CLOSE limit
			Door stopped during the close cycle	Door opens to the OPEN limit or Mid-Stop and activates TTC
		Button is held (constant pressure)	Door opening	No change in state (bypasses Mid-Stop) and activates TTC
	myQ® Smart Facility Access	Open is pressed	Operator at OPEN limit	No change in state (Recycle timer)
			Operator at CLOSE limit	Door opens to the OPEN limit or Mid-Stop and activates TTC
			Door opening	No change in state
			Door closing	Door will auto reverse to OPEN limit (bypasses Mid-Stop) and activates TTC
			Door at Open Mid-Stop	Door opens to the OPEN limit and activates TTC
			Door stopped during open or close cycle	Door opens to the OPEN limit or Mid-Stop and activates TTC
		Close is pressed	Operator at OPEN limit	Door closes to the CLOSE limit
			Operator at CLOSE limit	No change in state
			Door opening	No change in state
			Door closing	No change in state
			Door at Open Mid-Stop	Door closes to the CLOSE limit
			Door stopped during open or close cycle	Door closes to the CLOSE limit

PROOF

DETERMINE AND SET OPERATING MODE (CONTINUED)

WIRING TYPE	DEVICE	ACTION	STATE	RESPONSE
TS This mode will attempt to close the door from any position except when fully closed, or when a safety input is present. The stop button will recycle the Timer-To-Close (TTC) at any position. To disable the TTC in this mode, installation of a defeat switch is required (see wiring diagram). Momentary contact to open, close, and stop with open override and TTC. Every device that causes door to open, including a reversing device, activates the TTC. Auxiliary controls can be connected to open input to activate the TTC. If the timer has been activated, the open button and radio control can recycle the timer. The TTC will function from the Open limit and Open mid stop (jumper must always be in place) with this operating mode type. Compatible with 3-Button Station, 1-Button Station and 1 and 3-Button Remote Control. LiftMaster Monitored Entrapment Protection (LMEP) Device required.	**Front panel buttons(membrane) and 3-Button Control Station**	OPEN button is pressed momentarily	Operator at OPEN limit	No change in state (Recycle TTC)
			Operator at CLOSE limit	Door opens to the OPEN limit or Mid-Stop and activates TTC
			Door opening	No change in state
			Door closing	Door will auto reverse to OPEN limit (bypasses Mid-Stop) and activates TTC
			Door at Open Mid-Stop	Door opens to the OPEN limit and activates TTC
			Door stopped during open or close cycle	Door opens to the OPEN limit or Mid-Stop and activates TTC
		CLOSE button is pressed momentarily	Operator at OPEN limit	Door closes to the CLOSE limit
			Operator at CLOSE limit	No change in state
			Door opening	No change in state
			Door closing	No change in state
			Door at Open Mid-Stop	Door closes to the CLOSE limit
			Door stopped during open or close cycle	Door closes to the CLOSE limit
		STOP button is pressed momentarily	Operator at OPEN limit	No change in state (Recycle TTC)
			Operator at CLOSE limit	No change in state
			Door opening	Door stops and activates TTC
			Door closing	Door stops and activates TTC
			Door at Open Mid-Stop	No change in state (Recycle TTC)
			Door stopped during open or close cycle	No change in state (Recycle TTC)
		OPEN button is held (constant pressure)	Operator at OPEN limit	No change in state (Recycle & hold TTC)
			Operator at CLOSE limit	Door opens to the OPEN limit (bypasses Mid-Stop) and activates TTC
			Door opening	No change in state (bypasses Mid-Stop) and activates TTC
			Door closing	Door will auto reverse to OPEN limit (bypasses Mid-Stop) and activates TTC
			Door at Open Mid-Stop	Door opens to the OPEN limit and activates TTC
			Door stopped during open or close cycle	Door opens to the OPEN limit (bypasses Mid-Stop) and activates TTC
		CLOSE button is held (constant pressure)	Operator at OPEN limit	Door closes to the CLOSE limit
			Operator at CLOSE limit	No change in state
			Door opening	No change in state
			Door closing	No change in state
			Door at Open Mid-Stop	Door closes to the CLOSE limit
			Door stopped during open or close cycle	Door closes to the CLOSE limit
	3-Button Remote Control Programmed as OPEN/CLOSE/STOP	OPEN button is pressed momentarily	Operator at OPEN limit	No change in state (Recycle TTC)
			Operator at CLOSE limit	Door opens to the OPEN limit or Mid-Stop and activates TTC
			Door opening	No change in state
			Door closing	Door will auto reverse to OPEN limit (bypasses Mid-Stop) and activates TTC
			Door at Open Mid-Stop	Door opens to the OPEN limit and activates TTC
			Door stopped during open or close cycle	Door opens to the OPEN limit or Mid-Stop and activates TTC
		CLOSE button is pressed momentarily	Operator at OPEN limit	Door closes to the CLOSE limit
			Operator at CLOSE limit	No change in state
			Door opening	No change in state
			Door closing	No change in state
			Door at Open Mid-Stop	Door closes to the CLOSE limit
			Door stopped during open or close cycle	Door closes to the CLOSE limit
		STOP button is pressed momentarily	Operator at OPEN limit	No change in state (Recycle TTC)
			Operator at CLOSE limit	No change in state
			Door opening	Door stops and activates TTC
			Door closing	Door stops and activates TTC
			Door at Open Mid-Stop	No change in state (Recycle TTC)
			Door stopped during open or close cycle	No change in state (Recycle TTC)
	Single Button Remote Control Programmed as SBC	Button is pressed	Operator at OPEN limit	Door closes to the CLOSE limit
			Operator at CLOSE limit	Door opens to the OPEN limit or Mid-Stop and activates TTC
			Door opening	Door stops and activates TTC
			Door closing	Door will auto reverse to OPEN limit (bypasses Mid-Stop) and activates TTC
			Door at Open Mid-Stop	Door opens to the OPEN limit and activates TTC
			Door stopped during the open cycle	Door closes to the CLOSE limit
			Door stopped during the close cycle	Door opens to the OPEN limit or Mid-Stop and activates TTC
	Single Button Control Station (Wired)	Button is pressed	Operator at OPEN limit	Door closes to the CLOSE limit
			Operator at CLOSE limit	Door opens to the OPEN limit or Mid-Stop and activates TTC
			Door opening	Door stops and activates TTC
			Door closing	Door will auto reverse to OPEN limit (bypasses Mid-Stop) and activates TTC
			Door at Open Mid-Stop	Door opens to the OPEN limit
			Door stopped during the open cycle	Door closes to the CLOSE limit
			Door stopped during the close cycle	Door opens to the OPEN limit or Mid-Stop and activates TTC
		Button is held (constant pressure)	Door opening	No change in state (bypasses Mid-Stop) and activates TTC
	myQ® Smart Facility Access	Open is pressed	Operator at OPEN limit	No change in state (Recycle TTC)
			Operator at CLOSE limit	Door opens to the OPEN limit or Mid-Stop (activates TTC)
			Door opening	No change in state
			Door closing	Door will auto reverse to OPEN limit (bypasses Mid-Stop) and activates TTC
			Door at Open Mid-Stop	Door opens to the OPEN limit and activates TTC
			Door stopped during open or close cycle	Door opens to the OPEN limit or Mid-Stop and activates TTC
		Close is pressed	Operator at OPEN limit	Door closes to the CLOSE limit
			Operator at CLOSE limit	No change in state
			Door opening	No change in state
			Door closing	No change in state
			Door at Open Mid-Stop	Door closes to the CLOSE limit
			Door stopped during open or close cycle	Door closes to the CLOSE limit

PROOF

DETERMINE AND SET OPERATING MODE (CONTINUED)

WIRING TYPE	DEVICE	ACTION	STATE	RESPONSE
D1 Constant pressure to open and close with wiring for sensing device to stop. Compatible with 2 or 3-Button Station	**3-Button Control Station**	OPEN button is pressed momentarily	Operator at OPEN limit	No change in state
			Operator at CLOSE limit	Door opens and stops when button is released
			Door opening	No change in state
			Door closing	No change in state
			Door at Open Mid-Stop	Door opens and stops when button is released
			Door stopped during open or close cycle	Door opens and stops when button is released
		CLOSE button is pressed momentarily	Operator at OPEN limit	Door closes and stops when button is released
			Operator at CLOSE limit	No change in state
			Door opening	No change in state
			Door closing	No change in state
			Door at Open Mid-Stop	Door closes and stops when button is released
			Door stopped during open or close cycle	Door closes and stops when button is released
		STOP button is pressed momentarily	Operator at OPEN limit	No change in state
			Operator at CLOSE limit	No change in state
			Door opening	Door stops
			Door closing	Door stops
			Door at Open Mid-Stop	No change in state
			Door stopped during open or close cycle	No change in state
		OPEN button is held (constant pressure)	Operator at OPEN limit	No change in state
			Operator at CLOSE limit	Door opens to the OPEN limit
			Door opening	No change in state
			Door closing	Door opens to the OPEN limit
			Door at Open Mid-Stop	Door opens to the OPEN limit
			Door stopped during open or close cycle	Door opens to the OPEN limit
		CLOSE button is held (constant pressure)	Operator at OPEN limit	Door closes to the CLOSE limit
			Operator at CLOSE limit	No change in state
			Door opening	No change in state
			Door closing	No change in state
			Door at Open Mid-Stop	Door closes to the CLOSE limit
			Door stopped during open or close cycle	Door closes to the CLOSE limit
	3-Button Remote Control Programmed as OPEN/CLOSE/STOP	OPEN button is pressed momentarily	Operator at OPEN limit	No change in state
			Operator at CLOSE limit	Door opens and stops when button is released
			Door opening	No change in state
			Door closing	Door opens to the OPEN limit
			Door at Open Mid-Stop	Door opens and stops when button is released
			Door stopped during open or close cycle	Door opens and stops when button is released
		CLOSE button is pressed momentarily	Operator at OPEN limit	Door closes and stops when button is released
			Operator at CLOSE limit	No change in state
			Door opening	No change in state
			Door closing	No change in state
			Door at Open Mid-Stop	Door closes and stops when button is released
			Door stopped during open or close cycle	Door closes and stops when button is released
		STOP button is pressed momentarily	Operator at OPEN limit	No change in state
			Operator at CLOSE limit	No change in state
			Door opening	Door stops
			Door closing	Door stops
			Door at Open Mid-Stop	No change in state
			Door stopped during open or close cycle	No change in state
	Single Button Remote Control	Button is pressed	Operator at OPEN limit	No change in state
			Operator at CLOSE limit	No change in state
			Door opening	No change in state
			Door closing	No change in state
			Door at Open Mid-Stop	No change in state
			Door stopped during open or close cycle	No change in state
	Single Button Control Station (Wired)	Button is pressed:	Operator at OPEN limit	No change in state
			Operator at CLOSE limit	No change in state
			Door opening	No change in state
			Door closing	No change in state
			Door at Open Mid-Stop	No change in state
			Door stopped during the open cycle	No change in state
			Door stopped during the close cycle	No change in state
	myQ	Door image is pressed:	Operator at OPEN limit	No change in state
			Operator at CLOSE limit	No change in state
			Door opening	No change in state
			Door closing	No change in state
			Door at Open Mid-Stop	No change in state
			Door stopped during open or close cycle	No change in state

PROOF

DETERMINE AND SET OPERATING MODE (CONTINUED)

WIRING TYPE	DEVICE	ACTION	STATE	RESPONSE
E2 Momentary contact to open with override and constant pressure to close. Release of close button will cause door to reverse (roll-back feature) plus wiring for sensing device to reverse. Compatible with 3-Button Station.	**3-Button Control Station**	OPEN button is pressed momentarily	Operator at OPEN limit	No change in state
			Operator at CLOSE limit	Door opens to the OPEN limit
			Door opening	No change in state
			Door closing	Door will auto reverse to OPEN limit
			Door at Open Mid-Stop	Door opens to the OPEN limit
			Door stopped during open or close cycle	Door opens to the OPEN limit
		CLOSE button is pressed momentarily	Operator at OPEN limit	Door closes and auto reverses when button is released
			Operator at CLOSE limit	No change in state
			Door opening	No change in state
			Door closing	No change in state
			Door at Open Mid-Stop	Door closes and auto reverses when button is released
			Door stopped during open or close cycle	Door closes and auto reverses when button is released
		STOP button is pressed momentarily	Operator at OPEN limit	No change in state
			Operator at CLOSE limit	No change in state
			Door opening	Door stops
			Door closing	Door stops
			Door at Open Mid-Stop	No change in state
			Door stopped during open or close cycle	No change in state
		OPEN button is held (constant pressure)	Operator at OPEN limit	No change in state
			Operator at CLOSE limit	Door opens to the OPEN limit
			Door opening	No change in state
			Door closing	Door will auto reverse to OPEN limit
			Door at Open Mid-Stop	Door opens to the OPEN limit
			Door stopped during open or close cycle	Door opens to the OPEN limit
		CLOSE button is held (constant pressure)	Operator at OPEN limit	Door closes to the CLOSE limit
			Operator at CLOSE limit	No change in state
			Door opening	No change in state
			Door closing	No change in state
			Door at Open Mid-Stop	Door closes and auto reverses when button is released
			Door stopped during open or close cycle	Door closes and auto reverses when button is released
	3-Button Remote Control Programmed as OPEN/CLOSE/STOP	OPEN button is pressed momentarily	Operator at OPEN limit	No change in state
			Operator at CLOSE limit	Door opens to the OPEN limit
			Door opening	No change in state
			Door closing	Door will auto reverse to OPEN limit
			Door at Open Mid-Stop	Door opens to the OPEN limit
			Door stopped during open or close cycle	Door opens to the OPEN limit
		CLOSE button is pressed momentarily	Operator at OPEN limit	Door closes and auto reverses when button is released
			Operator at CLOSE limit	No change in state
			Door opening	No change in state
			Door closing	No change in state
			Door at Open Mid-Stop	Door closes and auto reverses when button is released
			Door stopped during open or close cycle	Door closes and auto reverses when button is released
		STOP button is pressed momentarily	Operator at OPEN limit	No change in state
			Operator at CLOSE limit	No change in state
			Door opening	Door stops
			Door closing	Door stops
			Door at Open Mid-Stop	No change in state
			Door stopped during open or close cycle	No change in state
	Single Button Remote Control	Button is pressed	Operator at OPEN limit	No change in state
			Operator at CLOSE limit	No change in state
			Door opening	No change in state
			Door closing	No change in state
			Door at Open Mid-Stop	No change in state
			Door stopped during open or close cycle	No change in state
	Single Button Control Station (Wired)	Button is pressed:	Operator at OPEN limit	No change in state
			Operator at CLOSE limit	No change in state
			Door opening	No change in state
			Door closing	No change in state
			Door at Open Mid-Stop	No change in state
			Door stopped during the open cycle	No change in state
			Door stopped during the close cycle	No change in state
	myQ	Door image is pressed:	Operator at OPEN limit	No change in state
			Operator at CLOSE limit	Door opens to the OPEN limit
			Door opening	No change in state
			Door closing	No change in state
			Door at Open Mid-Stop	No change in state
			Door stopped during open or close cycle	No change in state

PROOF

TROUBLESHOOTING

NOTE: THIS TROUBLESHOOTING GUIDE WAS TAKEN DIRECTLY FROM THE PDF SUPPLIED BY JUSTIN PEART. ALMOST NO CHANGES WERE MADE TO THE CONTENT AND THE TERMINOLOGY MAY BE INCORRECT. PLEASE CHECK.

If an error occurs, the idle screen is replaced by a screen showing the error code and a description of the error. An example error code display is shown below.
Error messages originate in one of three categories:
• Inverter (power faults)
• Door control codes related to the motor and encoder
• Option codes related to accessories used with the MC11 or MC21 controllers.

Consult the Table of Error Codes and Error Code Priority Levels tables below to determine the cause and corrective action. Depending on the type of error, user interaction may be required to clear the error. The error window closes when the error has been cleared/corrected.

For example, error E17 “Reset Limits” in the example above is because the door limits cannot be verified. In this case, the only corrective action is to perform a Quick Setup to re-establish the door’s positions.

Priority Level	Reset Condition	Comment
Low	Activation Input	Can also be reset by higher priority reset conditions.
Medium	Stop, Monitored Stop or MENU/ENTER Button pressed	Can also be reset by higher priority reset conditions.
High	MENU/ENTER Button pressed	
Fault Specific		Auto-clears when fault no longer exists.

Error Code:	Description:	Level:	Cause:	Check:
F00	Unidentified Error		An error that has no code assigned yet. Note error text.	
F01	Door has moved beyond the lower end position		• Distance stop ramp too small • Safety limit switch too small • End positions not correctly set • Direction of rotation not correct • Brake failure/door fails	
F02 F03	Door has moved beyond the upper end position		• Distance stop ramp too small • Safety liit switch too small • End positions not correctly set • Direction of rotation not correct	
F04	Door has moved in the wrong direction. Door was blocked during travel.		• Direction of rotation not correct • Sagging when starting a door with high weight • Door moved onto obstacle. If needed, check force parameters set. • Encoder malfunction (e.g. encoder no longer plugged into encoder axis) • Inverter has triggered stop by itself (e.g. due to thermal internal error) • Inverter has triggered stop due to overvoltage, missing brake chopper on imbalanced door	
F05	Door did not stop on time while moving, or made an unauthorised move while standing.		• Brake worn out/not switched • Stop command not transmitted • Encoder shows ‘ghost movement’	
F06	Door has moved too fast (door speed monitoring)		Door significantly Faster than during the last travel in the same direction (e.g. due to higher weight) Reset speed monitoring by newly setting an end position.	
F07	Door has not moved despite move command		• Inverter not ready to drive due to internal error Inverter cannot start motor (e.g. high weight, wrong motor settings) • Encoder loosely plugged into encoder axis (too much clearance)	

PROOF 1

Error Code:	Description:	Level:	Cause:	Check:
F08	Configuration not found. Reset to factory setting.		• No stored configuration could be fround in EEPROM. The access to the EEPROM works. Normal for instance with new controller, and/ or after certain tests with the test system (production). • The stored configuration is oudated and no longer compatible with the current software. Can occur after an update to a new version	
F09	System was restarted			
F10	UPWARD force curve is missing		Force sensing in UPWARD direction is activated. But force curve in UPWARD direction is not stored. Execute teach-in drive.	
F11	DOWNWARD force curve is missing		Force sensing in DOWNWARD direction is activated. But force curve in DOWNWARD direction is not stored. Execute teach-in drive.	
F14	End positions are not stored		Please set the end positions in the menu 'Door Positions'.	
F18	Error during access from EEPROM module. Leads to system restart.		Hardware error in I^2C bus, or in EEPROM	
F23	Inverter reports excessive temperature. Stands until inverter cools down.		Temperature in inverter module exceeds maximum value of 90°C Inverter ready for operation, when temperature sinks under 60°C	
F24	Error during cyclical test of the safety chain function		When the door is stationary, a test of the safety chain is carried out every 10 seconds, in which the safety chain switches, which is then scanned by a command at the inverter. • Communication error • Error in the system of the safety chain	
F25	Inverter has reported a hardware error		Inverter has detected an error when analyzing the motor currents and voltages. • One or more motor phases are not connected • The motor phases are not interconnected correctly • Hardware error in the measuring bridges, on the side of the inverter. • overvoltage on the circuit board (voltage too high in the link)	
F72	OSE error		OSE continously triggered, e.g. due to cable defect or block in the light channel	
F74	Wireless (radio) OSE error		• OSE continuously triggered • OSE test function fails Cause depends on used OSE, e.g. due to cable defect, block in the light channel, battery OSE	
F81	Light barrier error		Light barrier continuously triggered, or test cannot be executed • Object in door area • Cable defect • Light barrier incorrectly aligned • Light barrier incorrectly wired • Incorrect Hi/Lo setting	

PROOF 1

Error Code:	Description:	Level:	Cause:	Check:
F84	Light grid error		Light grid continuously triggered, or test cannot be executed. • Object in door area • Cable defect • Light grid incorrectly aligned • Light grid not ready for operation	
F90	Error in Uart initialization: Line used		Error in cabling	
F91	Error in position encoder message: position outside of valid range		• Wrong encoder set • Error in communication cable	
F92	Time out error when receiving position econder message. Message incomplete.		• Wrong encoder set • Error in communication cable	
F93	Time-out error when receiving position encoder message. No signals received.		• Wrong encoder set • Error in communication cable • Cable defect/not connected	
F94	Time out error when receiving inverter message		• Cable defect • Inverter not ready for operation	
F95	Error when receiving inverter message: Invalid format		Error in communication cable	
F96	Safety chain was interrupted from outside		• Bridge pulled on 'safety chain' termina • Encoder cable pulled • Bridges pulled on encoder • Motor thermal, slack rope switch • Inverter cable pulled	
F98	Dalmatic encoder reports voltage loss. End positions possibly no longer correct.		Dalmatic encoder was without voltage for indeterminate time, which should normally be prevented by the battery. The current encoder position is likely to be incorrect.	Change battery, then reset limits.
F99	Dalmatic encoder reports low battery voltage.		Dalmatic encoder reports low battery voltage.	Replace battery

PROOF 1

MAINTENANCE

MAINTENANCE SCHEDULE

Check at the intervals listed in the following chart:

⚠ WARNING

To avoid SERIOUS personal INJURY or DEATH:

- Disconnect electric power BEFORE performing ANY adjustments or maintenance.
- ALL maintenance MUST be performed by a trained door systems technician.

ITEM	PROCEDURE	EVERY MONTH	EVERY 3 MONTHS OR 5,000 CYCLES	EVERY 6 MONTHS OR 10,000 CYCLES
Drive Chain	Check for excessive slack. Check and adjust as required. Lubricate.		●♦	
Sprockets	Check set screw tightness.		●	
Fasteners	Check and tighten as required.			●
Manual Hoist	Check and operate.			●
Non-Motor Bearings	Check for wear and lubricate.		●♦	
Shafts	Check for wear and lubricate.		●♦	
Solenoid Brake	Inspect brake pad			●
LiftMaster Monitored Entrapment Protection (LMEP)	Check alignment and functionality.	●		

♦ **Use SAE 30 Oil (Never use grease or silicone spray).**

- Do not lubricate motor. Motor bearings are rated for continuous operation.

● Inspect and service whenever a malfunction is observed or suspected

HOW TO ORDER REPAIR PARTS

OUR LARGE SERVICE ORGANIZATION SPANS AMERICA

Installation and service information are available.
Call our TOLL FREE number:

1-800-528-2806

LiftMaster.com

PROOF 1

OPERATOR CYCLE/SERVICE CYCLE FEATURE

The system is equipped with a cycle counter to show how many cycles have been performed and number of months in service since installation. If the controller is replaced, all settings will reset to 0.

To view absolute cycles and current maintenance cycles see the menu for information.

PLEASE PROVIDE SCREEN REFERENCE FOR MENU SCREEN DIAGRAM

REQUEST TO ADD 'MYQ BIZ' BUT NO CONTENT SUPPLIED. PLEASE PROVIDE IF DIFFERENT THAN THAT EARLIER IN THE MANUAL.

WIRING DIAGRAMS

PAGE NOT FINAL
PENDING FINAL
INFO FROM TEAM

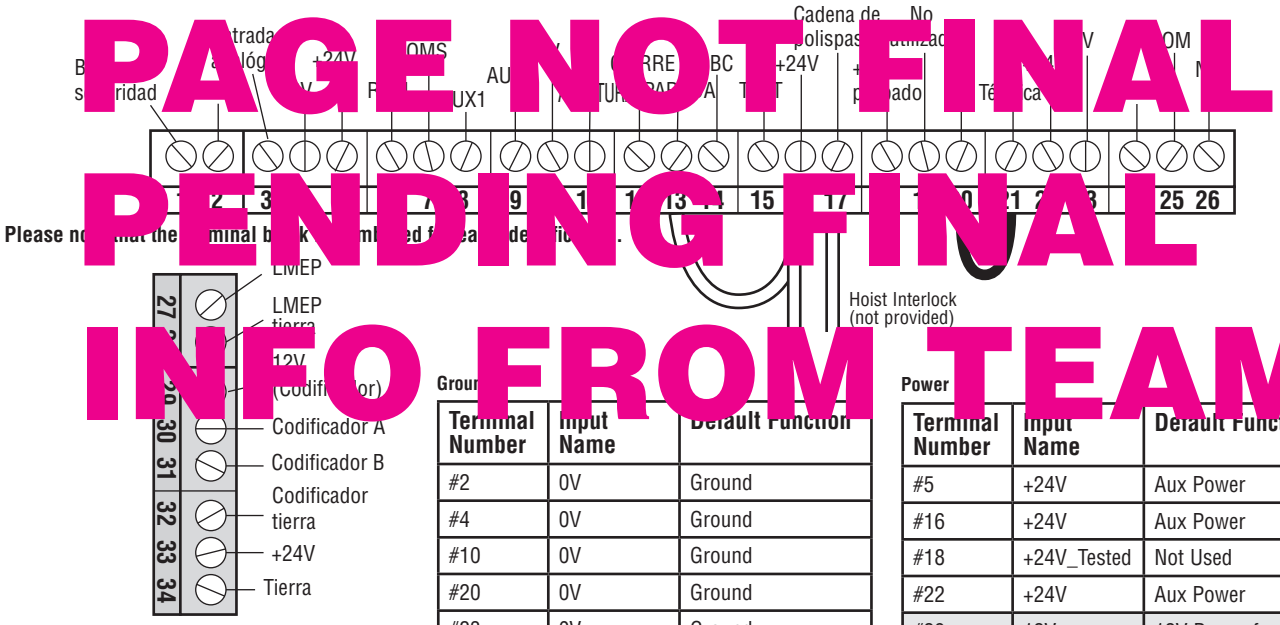

FRONT COVER OF WALL CONTROL

Open – Membrane Button
Type: Normally-Open dry contact membrane switch with tactile feedback
States:
Active input Definition: Connect Input to ground
Inactive input Definition: Leave input open (no connection to ground)

Close – Membrane Button
Type: Normally-Open dry contact membrane switch with tactile feedback
States:
Active input Definition: Connect Input to ground
Inactive input Definition: Leave input open (no connection to ground)

Stop – Membrane Button
Type: Monitored Normally-Open dry contact membrane switch with tactile feedback
States:
Active input Definition: Connect Input to ground
Inactive input Definition: Input left open (resistor voltage measured)
Missing input Definition: Input not connected (full voltage measured)

PROGRAMMABLE INPUTS
AUX1 and AUX2 inputs are user selectable and may be defined as the following:

No Function (default)
Function - Input is disabled

Emergency Stop
Function – Active input will stop a door in motion and will inhibit an idle door from moving.

Photoeye
Function – Safety entrapment protection, non-monitored, see section 4.3

Lock Open
Function - Active input disables all command inputs except Open. Door can open but once at open limit, door is prevented from closing. Inhibits Timer to Close and Delay to Close.

Lock Close
Function - Active input disables all command inputs except Close. Door can close but once at closed limit, door is prevented from opening.

Grou

Terminal Number	Input Name	Default Function
#2	0V	Ground
#4	0V	Ground
#10	0V	Ground
#20	0V	Ground
#23	0V	Ground
#28	0V	LMEP Ground
#32	0V	Ground for Encoder
#34	0V	Ground

Inputs

Terminal Number	Input Name	Default Function
#1	Safety Edge	Safety Edge (Non-monitored)
#3	Analog Input	Not used
#6	RPM	Not used
#7	OMS	Mid-Stop Input
#8	AUX1	Programmable Input
#9	AUX2	Programmable Input
#11	Open	Door Open Input
#12	Close	Door Close Input
#13	Stop	Door Stop Input
#14	SBC	Single Button Close Input
#15	TDFT	Timer Defeat Input
#17	Hoist Chain	Hoist Chain Input
#19	N/C	Not Used
#21	Thermal	Motor Thermal Input
#24	NO	Door in Motion Relay: Normally Open
#25	COM	Door in Motion Relay: Common
#26	NC	Door in Motion Relay: Normally Closed
#27	LMEP	Monitored Photo Eye
#30	A	Encoder RS-485 A
#31	B	Encoder RS-485 B

Power

Terminal Number	Input Name	Default Function
#5	+24V	Aux Power
#16	+24V	Aux Power
#18	+24V_Tested	Not Used
#22	+24V	Aux Power
#29	12V	12V Power for Encoder
#33	+24V	Aux Power

* Terminals in gray can be found on the top board of the wall control.

PROOF 1

ACCESSORY WIRING DIAGRAM

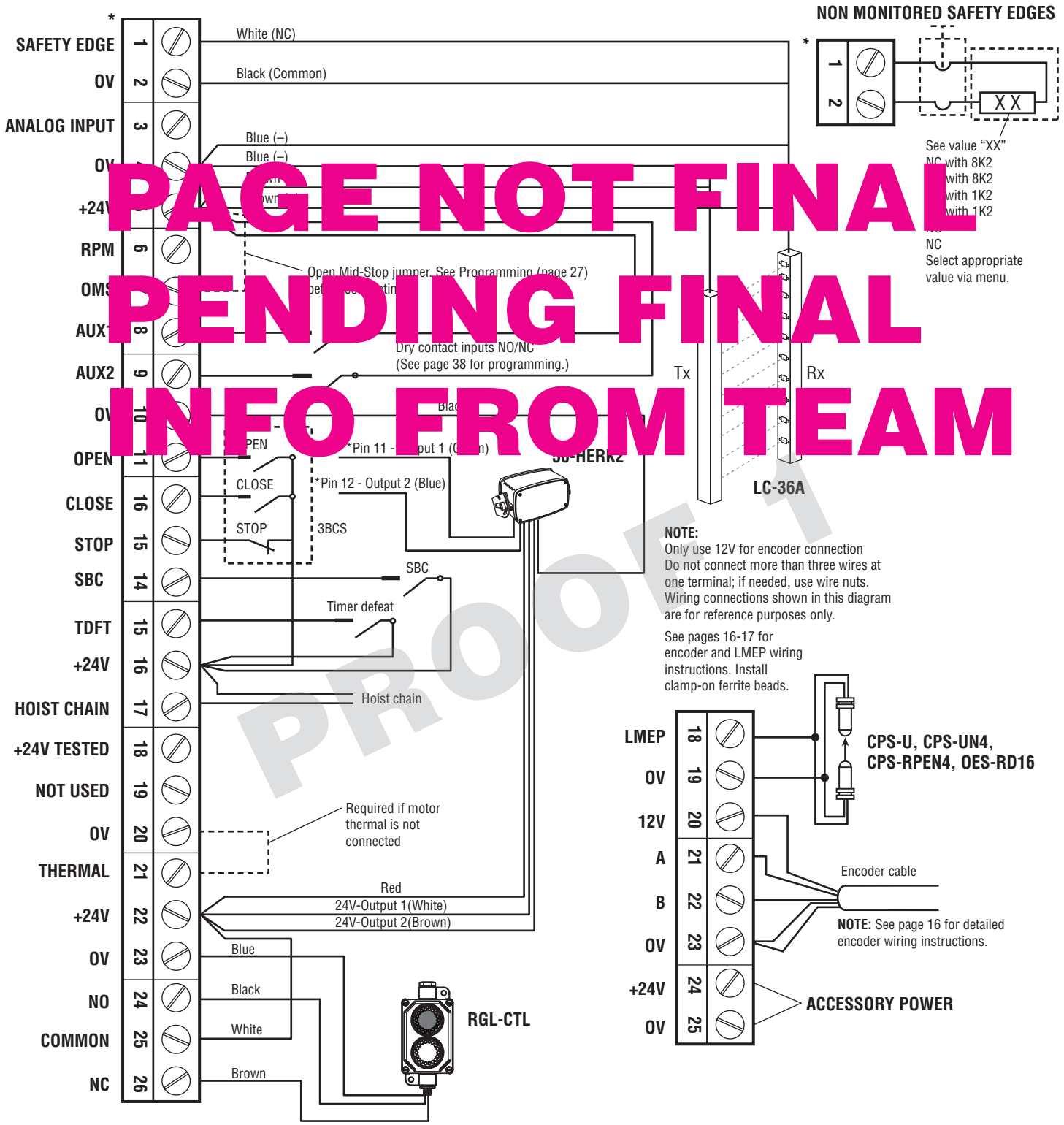

PAGE NOT FINAL
PENDING FINAL
INFO FROM TEAM
PROOF 1

SERVICE PARTS

SERVICE KIT	NUMBER	DESCRIPTION
K41-0160	HPH1/HPH2	Control Box Cover
K41-0164	HPH1/HPH2	Control Box Back
K41-0161	HPH1/HPH2	Control board
K41-0162	HPH1/PH2	Display board with Screen
K41-0163	HPH1/HPH2	Control Box 3 Button Assembly
K41-0156	HPH1/HPH2	CTM Left Hand
K41-0157	HPH1/HPH2	CMT Right Hand

This page will be populated with small images from the carton inventory once it is complete.

Motor Head:

K41-0165	DH1 & HDH2	Filter Board
K41-0166	DH1 & HDH2	Transformer
K41-06167	DH1 & HDH2	Inverter Board
K41-06168	DH1 & HDH2	Junction Box
K41-06169	DH1 & HDH2	Junction Box Cover
K41-06170	DH1 & HDH2	Encoder Cover
K41-06171	DH1 & HDH2	Encoder
K41-06172	DH1 & HDH2	Wall Brace Bracket
K41-06173	DH1 & HDH2	Gear Box
K41-06174	DH1 & HDH2	Motor
K41-06175	DH1 & HDH2	Brake
K41-06176	DH1 & HDH2	Hoist

PROOF 1

OPERATOR DIMENSIONS

FRONT VIEW

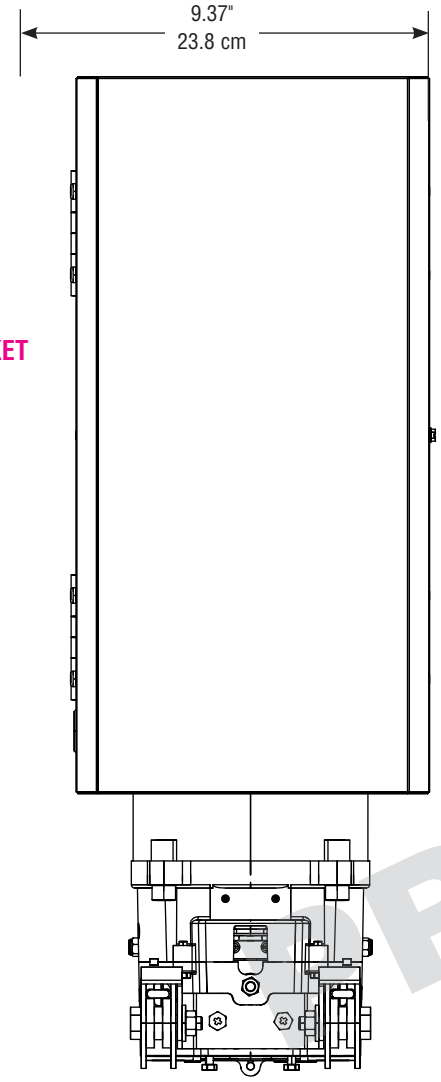

NEED BRACKET

SIDE VIEW

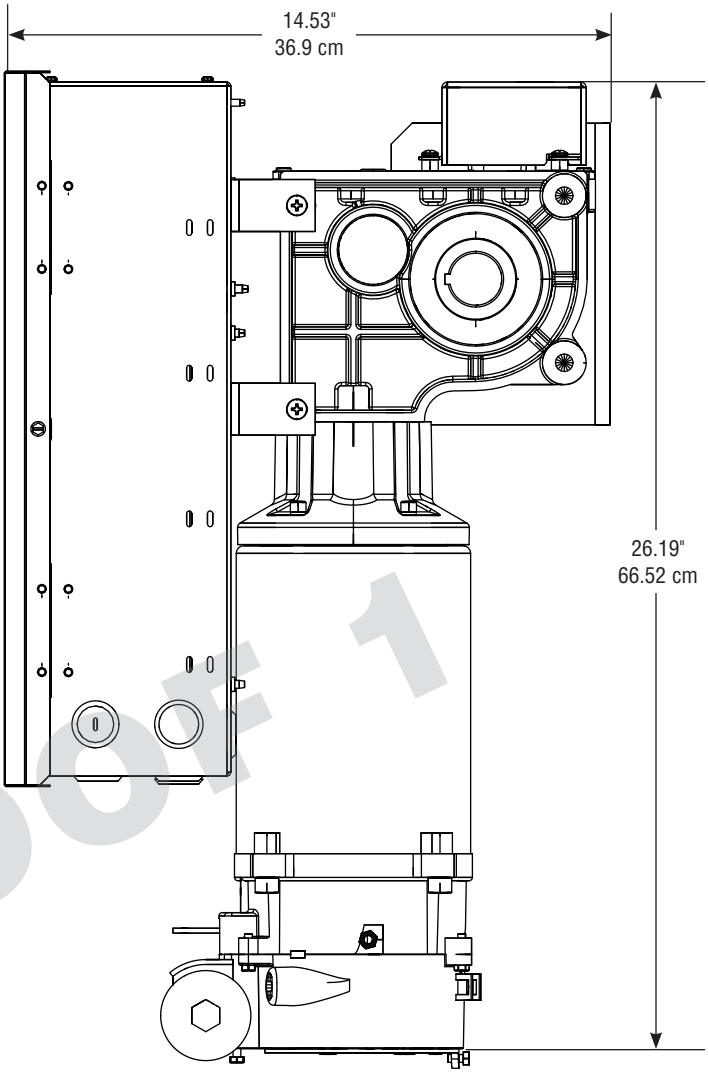

END VIEW

ART PENDING

PROOF 1

WARRANTY

LIFTMASTER LIMITED WARRANTY

LiftMaster ("Seller") warrants to the first retail purchaser of this product, for the residence in which this product is originally installed, that it is free from defects in materials and/or workmanship for a specific period of time as defined below (the "Warranty Period"). The warranty period commences from the date of purchase.

WARRANTY PERIOD		
Parts	**Motor & Controller**	**Accessories**
1 year	2 years	1 year

The proper operation of this product is dependent on your compliance with the instructions regarding installation, operation, and maintenance and testing. Failure to comply strictly with those instructions will void this limited warranty in its entirety.

If, during the limited warranty period, this product appears to contain a defect covered by this limited warranty, call 1-800-528-9131, toll free, before dismantling this product. You will be advised of disassembly and shipping instructions when you call. Then send the product or component, pre-paid and insured, as directed to our service center for warranty repair. Please include a brief description of the problem and a dated proof-of-purchase receipt with any product returned for warranty repair. Products returned to Seller for warranty repair, which upon receipt by Seller are confirmed to be defective and covered by this limited warranty, will be repaired or replaced (at Seller's sole option) at no cost to you and returned pre-paid. Defective parts will be repaired or replaced with new or factory rebuilt parts at Seller's sole option. [You are responsible for any costs incurred in removing and/or reinstalling the product or any component.]

ALL IMPLIED WARRANTIES FOR THE PRODUCT, INCLUDING BUT NOT LIMITED TO ANY IMPLIED WARRANTIES OF MERCHANTABILITY AND FITNESS FOR A PARTICULAR PURPOSE, ARE LIMITED IN DURATION TO THE APPLICABLE LIMITED WARRANTY PERIOD SET FORTH ABOVE FOR THE RELATED COMPONENT(S), AND NO IMPLIED WARRANTIES WILL EXIST OR APPLY AFTER SUCH PERIOD. Some States and Provinces do not allow limitations on how long an implied warranty lasts, so the above limitation may not apply to you. THIS LIMITED WARRANTY DOES NOT COVER NON-DEFECT DAMAGE, DAMAGE CAUSED BY IMPROPER INSTALLATION, OPERATION OR CARE (INCLUDING, BUT NOT LIMITED TO ABUSE, MISUSE, FAILURE TO PROVIDE REASONABLE AND NECESSARY MAINTENANCE, UNAUTHORIZED REPAIRS OR ANY ALTERATIONS TO THIS PRODUCT), LABOR CHARGES FOR REINSTALLING A REPAIRED OR REPLACED UNIT, REPLACEMENT OF CONSUMABLE ITEMS (E.G., BATTERIES IN REMOTE CONTROL TRANSMITTERS AND LIGHT BULBS), OR UNITS INSTALLED FOR NON-RESIDENTIAL USE. THIS LIMITED WARRANTY DOES NOT COVER ANY PROBLEMS WITH, OR RELATING TO, THE GARAGE DOOR OR GARAGE DOOR HARDWARE, INCLUDING BUT NOT LIMITED TO THE DOOR SPRINGS, DOOR ROLLERS, DOOR ALIGNMENT OR HINGES. THIS LIMITED WARRANTY ALSO DOES NOT COVER ANY PROBLEMS CAUSED BY INTERFERENCE. UNDER NO CIRCUMSTANCES SHALL SELLER BE LIABLE FOR CONSEQUENTIAL, INCIDENTAL OR SPECIAL DAMAGES ARISING IN CONNECTION WITH USE, OR INABILITY TO USE, THIS PRODUCT. IN NO EVENT SHALL SELLER'S LIABILITY FOR BREACH OF WARRANTY, BREACH OF CONTRACT, NEGLIGENCE OR STRICT LIABILITY EXCEED THE COST OF THE PRODUCT COVERED HEREBY. NO PERSON IS AUTHORIZED TO ASSUME FOR US ANY OTHER LIABILITY IN CONNECTION WITH THE SALE OF THIS PRODUCT.

Some states and provinces do not allow the exclusion or limitation of consequential, incidental or special damages, so the above limitation or exclusion may not apply to you. This limited warranty gives you specific legal rights, and you may also have other rights, which vary from state to state and province to province.

PROOF