CHAMBERLAIN®

www.chamberlain.com

Installation Manual

Chain Drive Garage Door Opener

Models C2405C • D2405C • C2102C • C2202C • D2101C

FOR RESIDENTIAL USE ONLY

PRE PROGRAMMED REMOTE CONTROL INCLUDED

To register your garage door opener to receive updates and offers from Chamberlain, visit chamberlain.registria.com or use the icon below:

1. Take a photo of the camera icon including the points (◉).
2. Send it in by texting the photo to 71403 (US).

- Please read this manual and the enclosed safety materials carefully!
- Fasten the manual near the garage door after installation.
- The door WILL NOT CLOSE unless the Protector System® is connected and properly aligned.
- Periodic checks of the garage door opener are required to ensure safe operation.
- The model number label is located on the back panel of your garage door opener.
- This garage door opener is compatible with myQ® and Security+ 2.0® accessories.
- DO NOT install on a one-piece door if using devices or features providing unattended close. Unattended devices and features are to be used ONLY with sectional doors.

c UL us LISTED

Download the myQ® App

Available on most iOS and Android Devices

Contents

Preparation 3
Assembly 7
Installation 11
Install the Door Control 22
Install the Protector System® 26
Connect Power 29
Adjustments 31
myQ® App Control 34
Connect With Your Smartphone 34
Operation 38
Using your Garage Door Opener 35
Using your Door Control 36
Remote Control and Keyless Entry 37
Home Link® 37
Erase the Memory 38
To Open the Door Manually 38
Maintenance 39
Troubleshooting 40
Warranty 42
Automatic Garage Door Opener Safety & Maintenance Guide 43
Repair Parts 45
Rail Assembly Parts 45
Installation Parts 45
Model C2102C 46
Model C2405C 47
Model D2405C 47
Model C2202C 48
Model D2101C 49

Safety Symbol and Signal Word Review

This garage door opener has been designed and tested to offer safe service provided it is installed, operated, maintained and tested in strict accordance with the instructions and warnings contained in this manual.

⚠ WARNING

Mechanical

⚠ WARNING

Electrical

When you see these Safety Symbols and Signal Words on the following pages, they will alert you to the possibility of ***serious injury or death*** if you do not comply with the warnings that accompany them. The hazard may come from something mechanical or from electric shock. Read the warnings carefully.

⚠ CAUTION

When you see this Signal Word on the following pages, it will alert you to the possibility of damage to your garage door and/or the garage door opener if you do not comply with the cautionary statements that accompany it. Read them carefully.

⚠ **WARNING:** This product can expose you to chemicals including lead, which are known to the State of California to cause cancer or birth defects or other reproductive harm. For more information go to *www.P65Warnings.ca.gov*

Unattended Operation

The Timer-to-Close (TTC) feature, the myQ® App, and myQ® Garage Door and Gate Monitor are examples of unattended close and are to be used ONLY with sectional doors. Any device or feature that allows the door to close without being in the line of sight of the door is considered unattended close. The Timer-to-Close (TTC) feature, the myQ®App, and any other myQ® devices are to be used ONLY with sectional doors.

The images throughout this manual are for reference only and your product may look different.

Preparation

Check the Door

⚠ WARNING

To prevent possible SERIOUS INJURY or DEATH:

- ALWAYS call a trained door systems technician if garage door binds, sticks, or is out of balance. An unbalanced garage door may NOT reverse when required.
- NEVER try to loosen, move or adjust garage door, door springs, cables, pulleys, brackets or their hardware, ALL of which are under EXTREME tension.
- Disable ALL locks and remove ALL ropes connected to garage door BEFORE installation and operating garage door opener to avoid entanglement.
- DO NOT install on a one-piece door if using devices or features providing unattended close. Unattended devices and features are to be used ONLY with sectional doors.

⚠ CAUTION

To prevent damage to garage door and opener:

- ALWAYS disable locks BEFORE installing and operating the opener.
- ONLY operate garage door opener at 120V, 60 Hz to avoid malfunction and damage.

Before you begin:

1. Disable locks and remove any ropes connected to the garage door.
2. Lift the door half way up. Release the door. If balanced, it should stay in place, supported entirely by its springs.
3. Raise and lower the door to check for binding or sticking. If your door binds, sticks, or is out of balance, call a trained door systems technician.
4. Check the seal on the bottom of the door. Any gap between the floor and the bottom of the door must not exceed 1/4" (6 mm). Otherwise, the safety reversal system may not work properly.
5. The opener should be installed above the center of the door. If there is a torsion spring or center bearing plate in the way of the header bracket, it may be installed within 4 feet (1.2 m) to the left or right of the door center. See page 13.

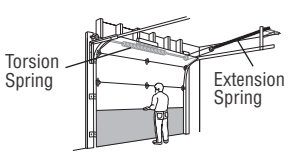

Before You Connect with Your Smartphone*

Monitor and control your garage door from anywhere using the myQ® App. You will need a router with Wi-Fi® and a smartphone or other mobile device. Make sure your mobile device is connected to your Wi-Fi® network. Hold your mobile device in the place where your garage door opener will be installed and check the Wi-Fi® signal strength.

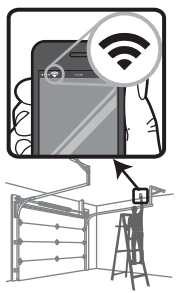

Check Signal Strength. If you see:

Wi-Fi signal is strong. You're all set!
Install your new garage door opener.

Wi-Fi signal is weak.
The garage door opener will likely connect to your Wi-Fi network. If not, try one of the options below.

No Wi-Fi signal. Try one of the following:

- Move your router closer to the garage door opener to minimize interference from walls and other objects
- Buy a Wi-Fi range extender

Visit support.chamberlaingroup.com for more details.

See myQ® App Control page 37 to connect your garage door opener to your Wi-F® network.

*Smartphone control is not available on models C2102 and D2101.

Tools Needed

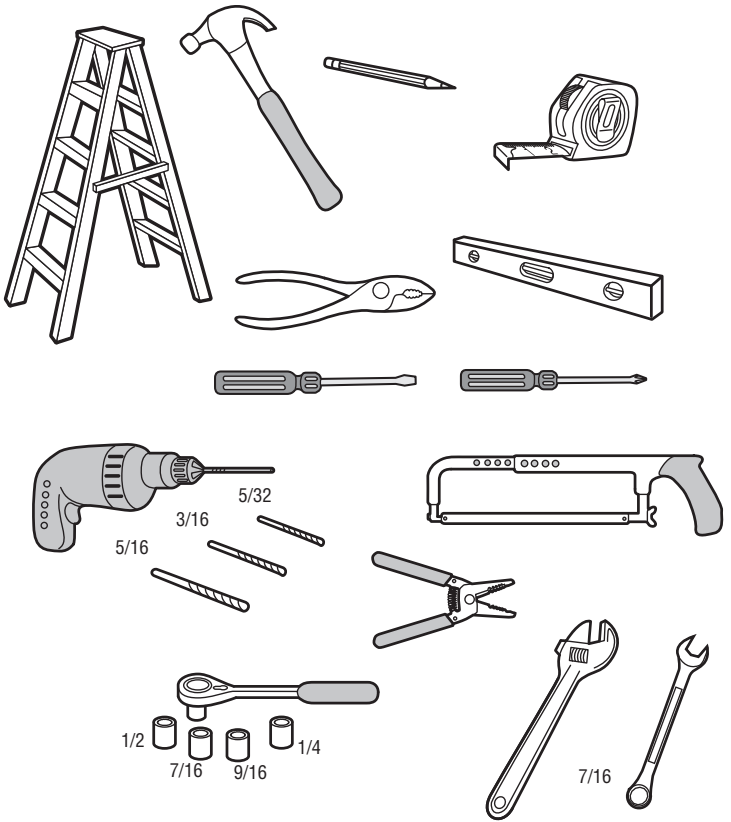

Additional Items You May Need:

Survey your garage are a to see if you will need any of the following items:

- **(2)2X4 Pieces of wood :** May be used to fasten the header bracket to the structural supports. Also used to position the garage door opener during installation and for testing the safety reversing sensors.
- **Support bracket and fastening hardware:** Must be used if you have a finished ceiling in your garage.
- **Support brackets**

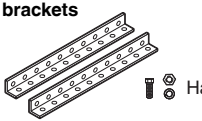

- **Hanging brackets**

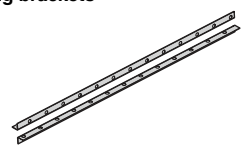

- **Extension brackets (Model 041A5281-1) or wood blocks:** Depending upon garage construction, extension brackets or wood blocks may be needed to install the safety reversing sensor.

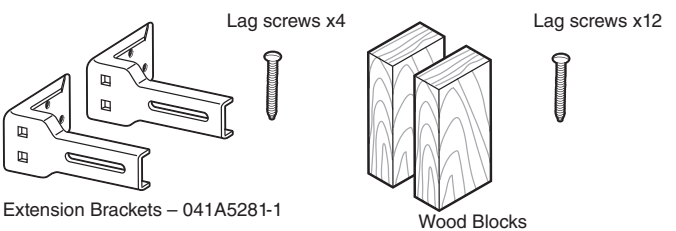

- **Fastening hardware:** Alternate floor mounting of the safety reversing sensor will require hardware not provided.
- **Door reinforcement:** Required if you have alight weight steel, aluminum, fiber glass or glass panel door.
- **Rail extension kit:** Required if your garage door is more than 7 feet (2.13 m) high.

Preparation

Carton Inventory

Save the carton and packing material until the installation and adjustment is complete. Instructions for the accessories will be attached to the accessory and are not included in this manual. The images throughout this manual are for reference only and your product may look different.

1. Header bracket
2. Pulley
3. Door bracket
4. Curved door arm
5. Straight door arm
   (Packaged inside front rail section)
6. Trolley
7. Emergency release rope and handle
8. Rail (1 front and 4 center sections)
9. Garage door opener (motor unit)
10. Chain spreader with screws - Model C2405
11. “U” bracket
12. Chain and cable or chain (D2405C and D21202C only)
13. **The Protector System®**
    Safety reversing sensors with 2 conductor white and white/black wire attached: sending sensor (1), receiving sensor (1), and safety sensor brackets (2)
14. Remote control
15. Push Button Door Control - Models C2202C, D2101C, C2102C
    Multi-Function Control Panel - Model C2405C, D2405C
16. White and red/white wire
17. Installation manual and all warning labels
18. Sprocket cover - Model C2405C, D2405C

See Hardware page 6.

Go to chamberlain.com for replacement or additional accessories:
3-button remote control model 953EV-P2
Wireless keypad model 940EV-P2

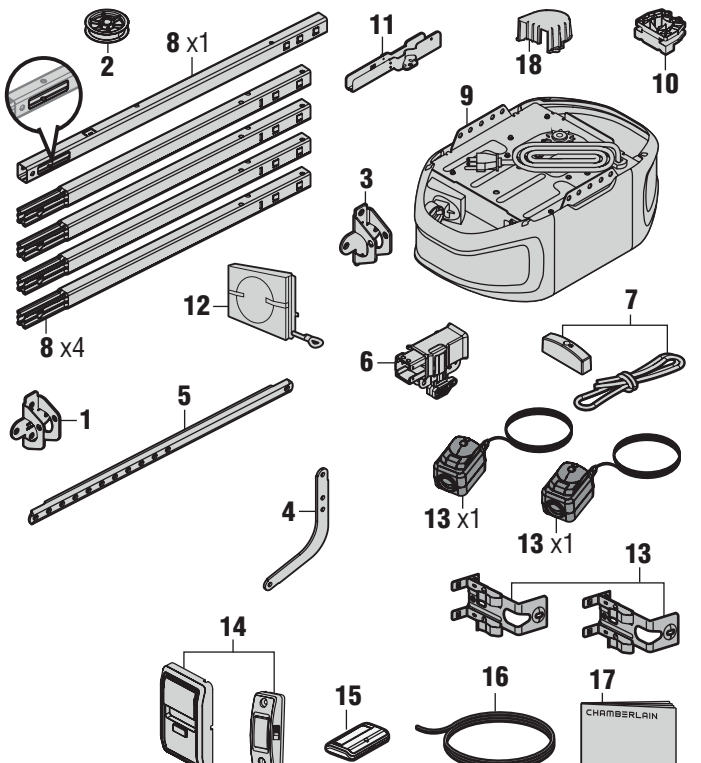

Preparation

Hardware

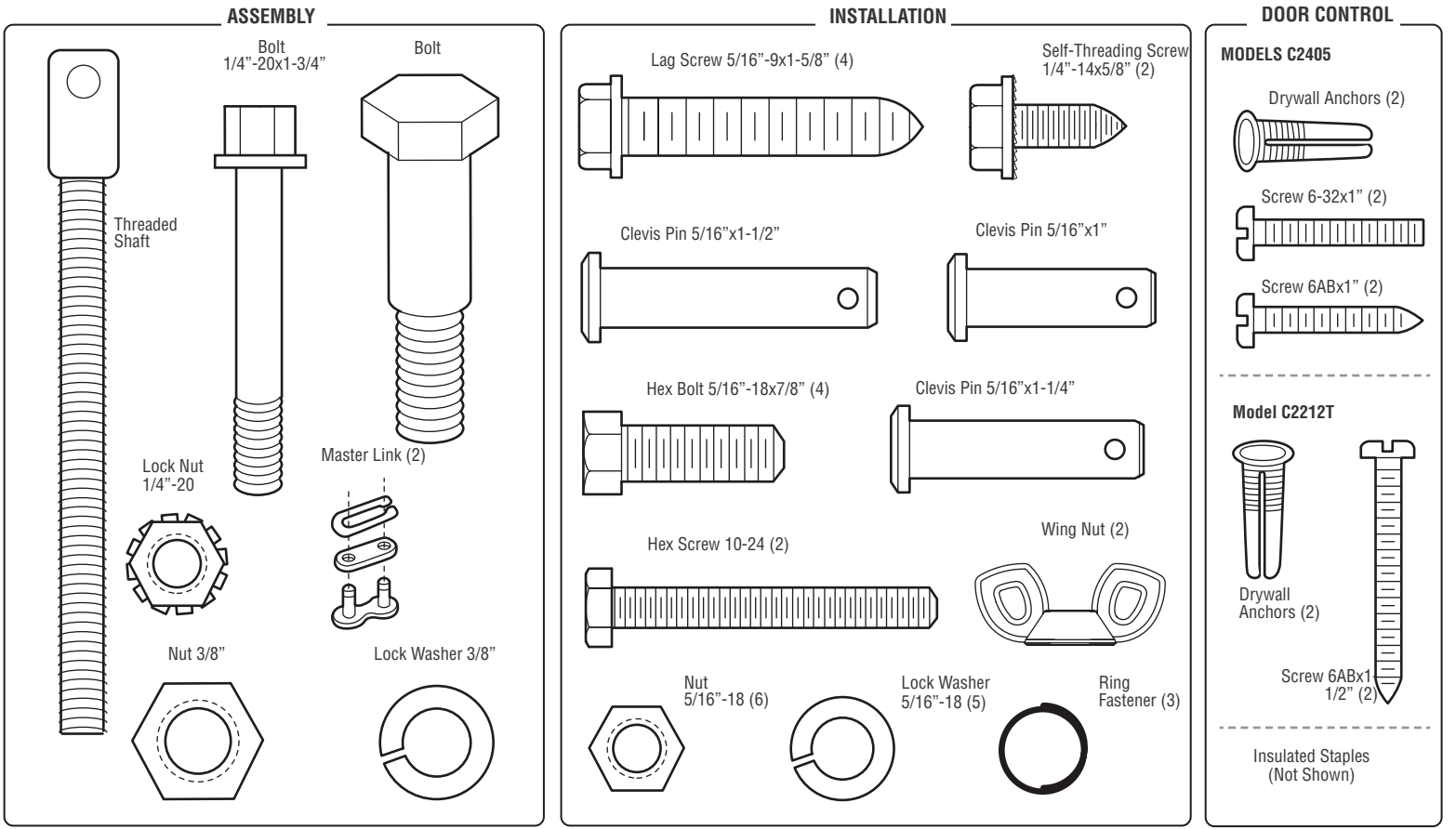

STEP 1 Assemble the Rail and Install the Trolley

⚠ CAUTION

To prevent INJURY from pinching, keep hands and fingers away from the joints while assembling the rail.

To avoid installation difficulties, do not run the garage door opener until instructed to do so.

The front rail has a cut out "window" at the door end. The rail tab MUST be on top of the rail when assembled.

1. Remove the straight door arm and hanging bracket packaged inside the front rail and set a side for Installation Step 5 and 9. ***NOTE: To prevent INJURY while unpacking the rail carefully remove the straight door arm stored within the rail section.***
2. Align the rail sections on a flat surface as shown and slide the tapered ends into the larger ones. Tabs along the side will lock into place.
3. Place the motor unit on packing material to protect the cover, and rest the back end of the rail on top.
   For convenience, put a support under the front end of the rail.
4. As a temporary stop, insert a screwdriver into the hole in the second rail section from the motor unit, as shown.
5. Check to be sure there are 4 plastic wear pads inside the inner trolley. If they became loose during shipping, check all packing material. Snap them back into position as shown.
6. Slide the trolley assembly toward the screwdriver as shown.
7. Slide the rail onto the "U" bracket, until it reaches all the stops on the top and sides of the "U" bracket.

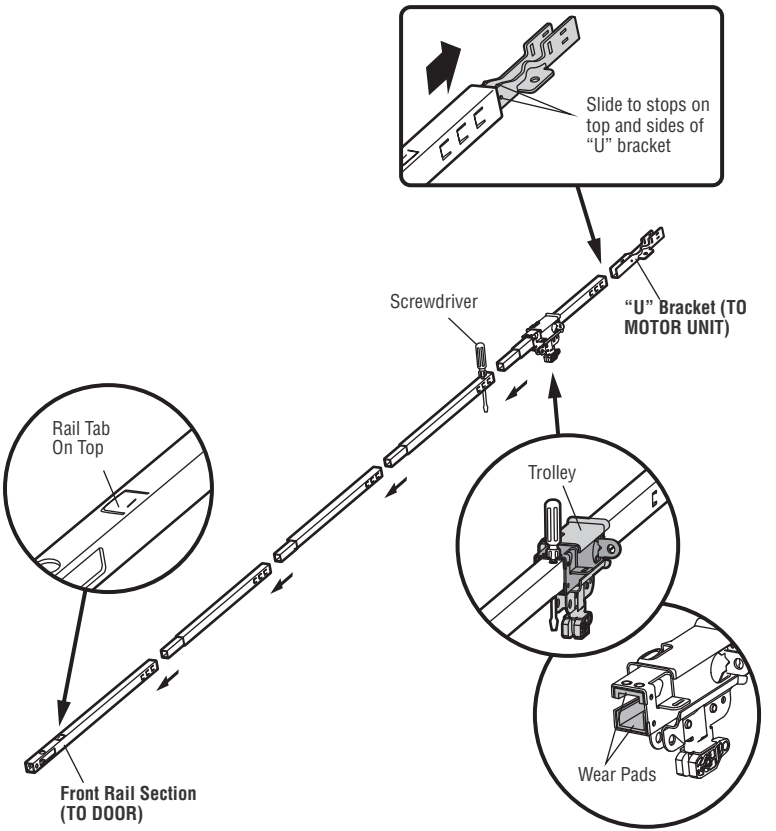

STEP 2 Fasten the Rail to the Motor Unit

MODEL C2405

⚠ CAUTION

To avoid SERIOUS damage to garage door opener, use ONLY those bolts/fasteners mounted in the top of the opener.

1. Insert a1/4”-20 x 1-3/4” bolt into the cover protection bolt hole on the back end of the rail as shown.
   Tighten securely with a1/4”-20 lock nut. DO NOT over tighten.
2. Remove the bolts from the top of the motor unit.
3. Use the carton to support the front end of the rail.
4. Place the “U” bracket, flat side down onto the motor unit and align the bracket holes with the bolt holes.
5. Fasten the “U” bracket with the previously removed bolts; DO NOT use any power tools. The use of power tools may permanently damage the garage door opener.
6. Attach chain spreader to the motor unit with two screws.

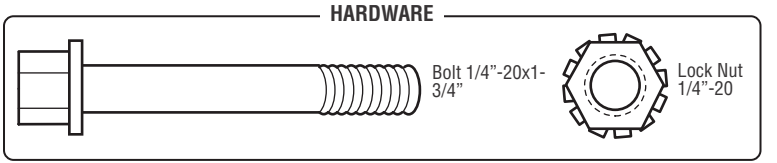

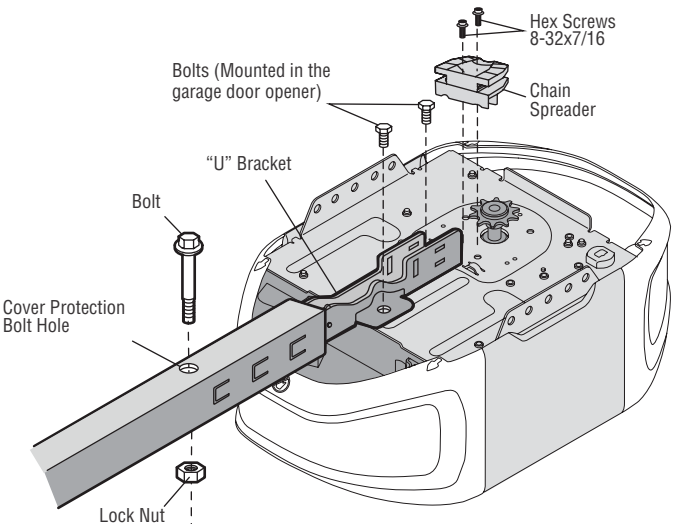

STEP 3 Install the Idler Pulley

1. Lay the chain/cable beside the rail, as shown. Grasp the end of the cable and pass approximately 12” (30 cm) of cable through the window. Allow it to hang until Assembly Step 4.
2. Remove the tape from the idler pulley. The inside center should be pre-greased. If dry, regrease to ensure proper operation.
3. Place the idler pulley into the window as shown.
4. Insert the idler bolt from the top through the rail and pulley. Tighten with a 3/8” lock washer and nut underneath the rail until the lock washer is compressed.
5. Rotate the pulley to be sure it spins freely.
6. Locate the rail tab. The rail tab is near the idler pulley on the front rail section. Use a flat head screwdriver and lift the rail tab until the tab is vertical (90º).

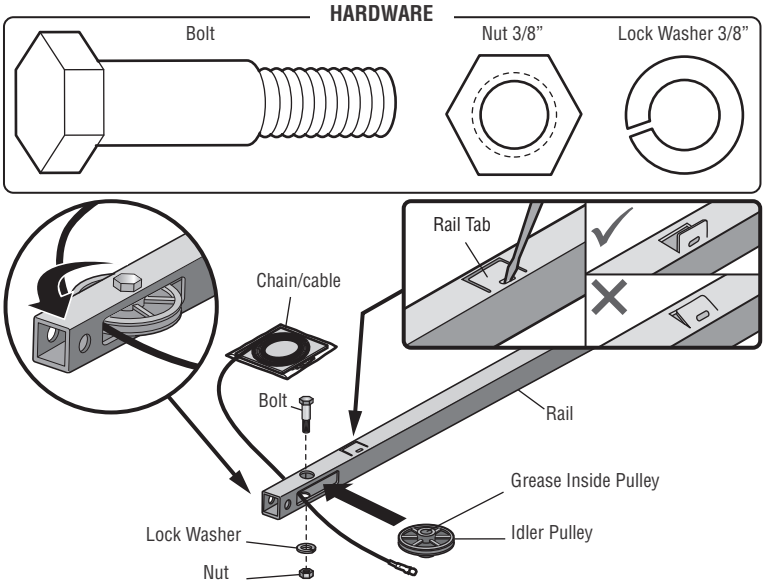

STEP 4 Install the Chain

1. Pull the cable around the idler pulley and toward the trolley.
2. Connect the cable to the retaining slot on the trolley, as shown. (Figure1)
   a. Push pins of master link bar through cable link and trolley slot.
   b. Push master link cap over pins and past pin notches.
   c. Slide the closed end of the clip-on spring over one of the pins. Push the open end of the clip-on spring onto the other pin.
3. With the trolley against the screwdriver, dispense the remainder of the cable/chain along the rail toward the motor unit around the sprocket and continuing to the trolley assembly. The sprocket teeth must engage the chain. (Figure 2)
4. Check to make sure the chain is not twisted, then connect it to the threaded shaft with the remaining master link.
5. Thread the inner nut and lock washer onto the trolley threaded shaft.
6. Insert the trolley threaded shaft through the hole in the trolley. ***Be sure the chain is not twisted.*** (Figure 3)
7. Loosely thread the outer nut onto the trolley threaded shaft.
8. Remove the screwdriver.

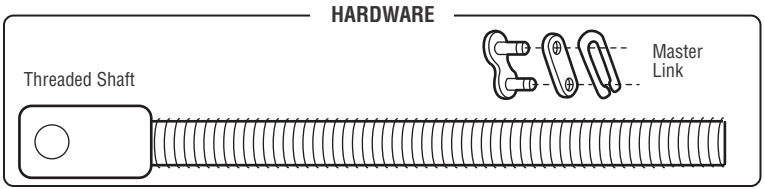

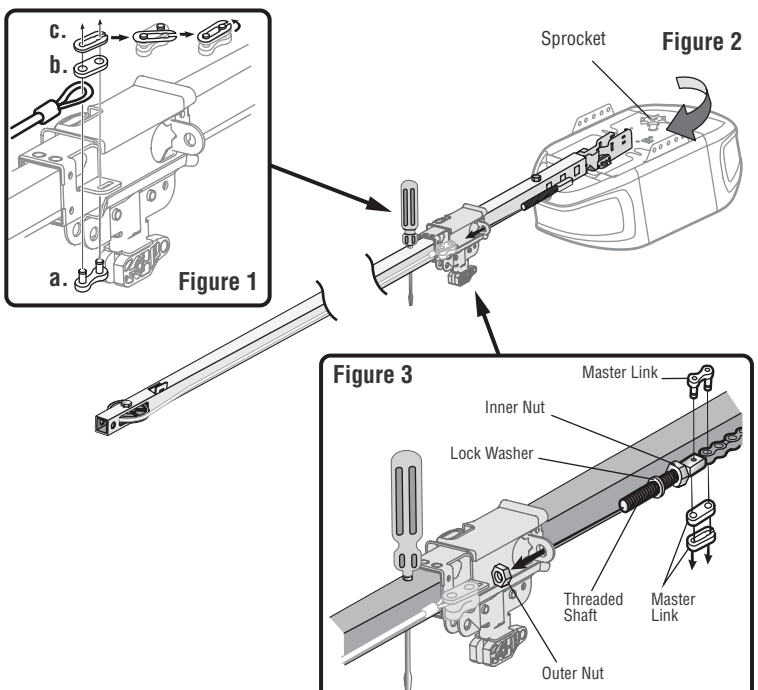

STEP 5 Tighten the Chain

1. Spin the inner nut and lock washer down the trolley threaded shaft, away from the trolley.
2. To tighten the chain, turn the outer nut in the direction shown.
3. When the chain is approximately 1/4” (6 mm) above the base of the rail at it’s midpoint, retighten the inner nut to secure the adjustment.

Sprocket noise can result if the chain is too loose. When installation is complete, you may notice some chain droop with the door closed. This is normal. If the chain returns to the position shown when the door is open, do not re-adjust the chain.

NOTE: During future maintenance, ALWAYS pull the emergency release handle to disconnect the trolley before adjusting the chain.

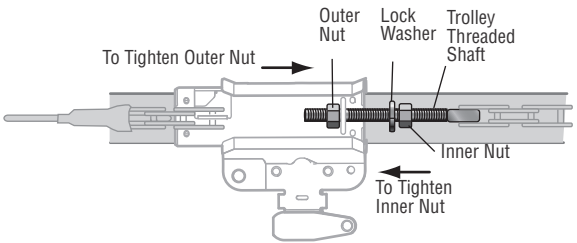

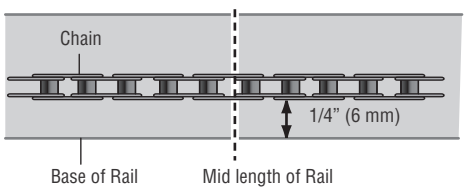

IMPORTANT INSTALLATION INSTRUCTIONS

⚠⚠ WARNING

To reduce the risk of SEVERE INJURY or DEATH:

1. READ AND FOLLOW ALL INSTALLATION WARNINGS AND INSTRUCTIONS.
2. Install garage door opener ONLY on properly balanced and lubricated garage door. An improperly balanced door may NOT reverse when required and could result in SEVERE INJURY or DEATH.
3. ALL repairs to cables, spring assemblies and other hardware MUST be made by a trained door systems technician BEFORE installing opener.
4. Disable ALL locks and remove ALL ropes connected to garage door BEFORE installing opener to avoid entanglement.
5. Where possible, install the door opener 7 feet (2.13 m) or more above the floor.
6. Mount the emergency release within reach, but at least 6 feet (1.83 m) above the floor and avoiding contact with vehicles to avoid accidental release.
7. NEVER connect garage door opener to power source until instructed to do so.
8. NEVER wear watches, rings or loose clothing while installing or servicing opener. They could be caught in garage door or opener mechanisms.
9. Install wall-mounted garage door control:
   - within sight of the garage door.
   - out of reach of small children at a minimum height of 5 feet (1.5 m) above floors, landings, steps or any other adjacent walking surface.
   - away from ALL moving parts of the door.
10. Place entrapment warning label on wall next to garage door control in a prominent location.
11. Place emergency release/safety reverse test label in plain view on inside of garage door.
12. Upon completion of installation, test safety reversal system. Door MUST reverse on contact with a 1-1/2” (3.8 cm) high object (or a 2x4 laid flat) on the floor.
13. DO NOT install on a one-piece door if using devices or features providing unattended close. Unattended devices and features are to be used ONLY with sectional doors.

14. SAVE THESE INSTRUCTIONS.

STEP 1 Determine the Header Bracket Location

⚠ WARNING

To prevent possible SERIOUS INJURY or DEATH:

- Header bracket MUST be RIGIDLY fastened to structural support on header wall or ceiling, otherwise garage door might NOT reverse when required. DO NOT install header bracket over drywall.
- Concrete anchors MUST be used if mounting header bracket or 2x4 into masonry.
- NEVER try to loosen, move or adjust garage door, springs, cables, pulleys, brackets, or their hardware, ALL of which are under EXTREME tension.
- ALWAYS call a trained door systems technician if garage door binds, sticks, or is out of balance. An unbalanced garage door might NOT reverse when required.

Installation procedures vary according to garage door types. Follow the instructions which apply to your door.

1. Close the door and mark the inside vertical centerline of the garage door.
2. Extend the line onto the header wall above the door. You can fasten the header bracket within 4 feet (1.22 m) of the left or right of the door center only if a torsion spring or center bearing plate is in the way; or you can attach it to the ceiling (see page 16) when clearance is minimal. (It may be mounted on the wall upside down if necessary, to gain approximately 1/2” (1 cm). If you need to install the header bracket on a 2x4 (on wall or ceiling), use lag screws (not provided) to securely fasten the 2x4 to structural supports as shown here and on page 16.
3. Open your door to the highest point of travel as shown. Draw an intersecting horizontal line on the header wall 2” (5 cm) above the high point:

- 2” (5 cm) above the high point for sectional door and one-piece door with track.
- 8” (20 cm) above the high point for one-piece door without track.

This height will provide travel clearance for the top edge of the door. ***NOTE:*** *If the total number of inches exceeds the height available in your garage, use the maximum height possible, or refer to page 16 for ceiling installation.*

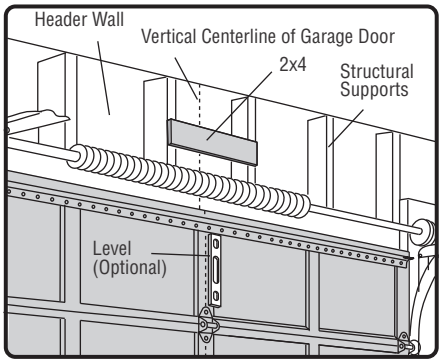

OPTIONAL CEILING MOUNT FOR HEADER BRACKET

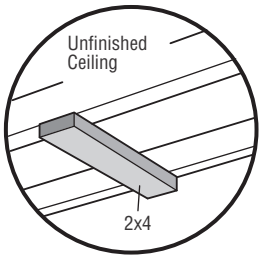

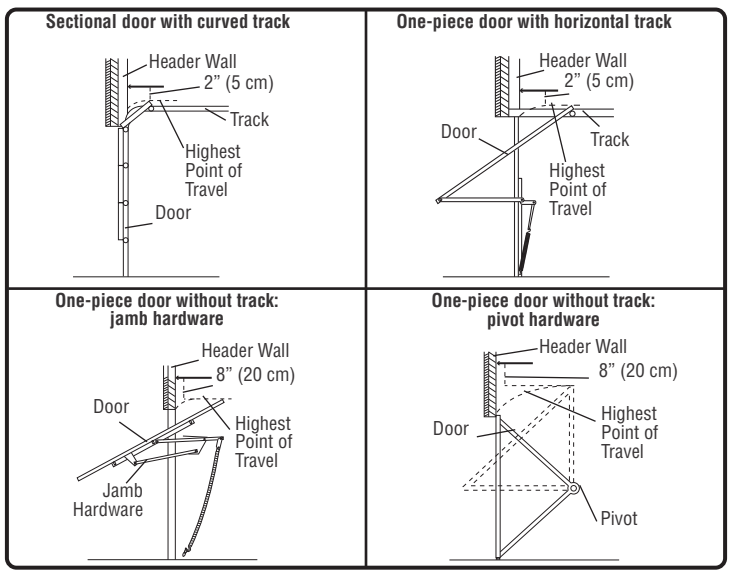

STEP 2 Install the Header Bracket

You can attach the header bracket either to the wall above the garage door, or to the ceiling. Follow the instructions which will work best for your particular requirements. **Do not install the header bracket over drywall. If installing into masonry, use concrete anchors (not provided).**

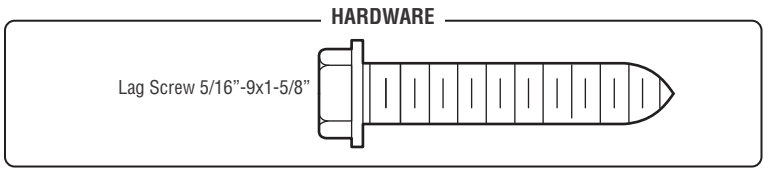

OPTION A - WALL INSTALLATION

1. Center the bracket on the vertical centerline with the bottom edge of the bracket on the horizontal line as shown (with the arrow pointing toward the ceiling).
2. Mark the vertical set of bracket holes. Drill 3/16” pilot holes and fasten the bracket securely to a structural support with the hardware provided.

OPTION B - CEILING INSTALLATION

1. Extend the vertical centerline onto the ceiling as shown.
2. Center the bracket on the vertical mark, no more than 6” (15 cm) from the wall. Make sure the arrow is pointing away from the wall. The bracket can be mounted flush against the ceiling when clearance is minimal.
3. Mark the side holes. Drill 3/16” pilot holes and fasten bracket securely to a structural support with the hardware provided.

WALL INSTALLATION

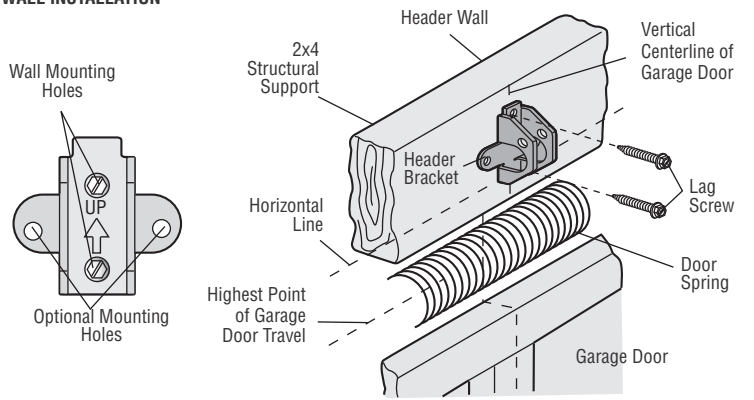

CEILING INSTALLATION

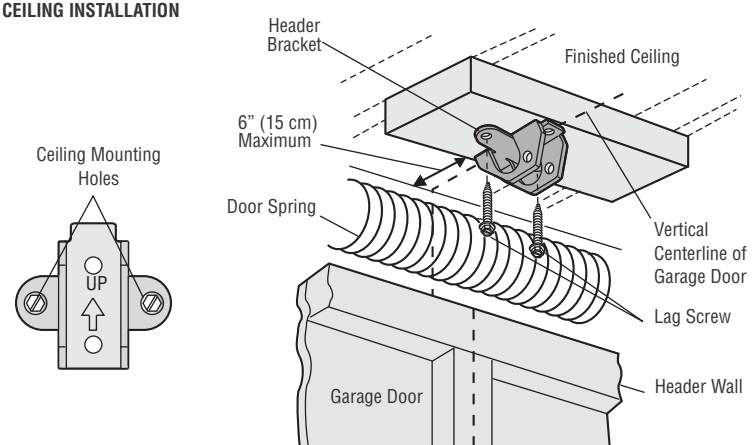

STEP 3 Attach the Rail to the Header Bracket

1. Position the opener on the garage floor below the header bracket. Use packing material as a protective base.
   NOTE: If the door spring is in the way, you will need help. Have someone hold the opener securely on a temporary support to allow the rail to clear the spring.
2. Position the rail bracket against the header bracket.
3. Align the bracket holes and join with a clevis pin as shown.
4. Insert a ring fastener to secure.

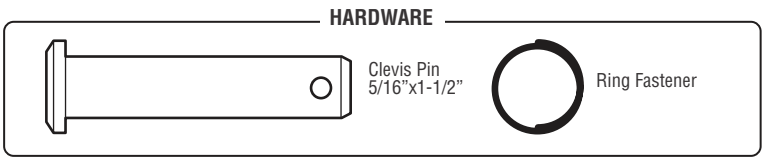

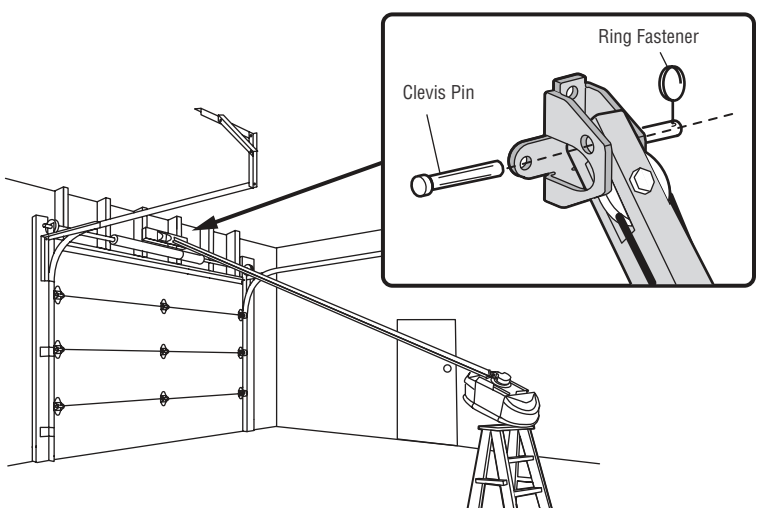

STEP 4 Position the Garage Door Opener

⚠ CAUTION

To prevent damage to garage door, rest garage door opener rail on 2x4 placed on top section of door.

1. Remove the packing material and lift the garage door opener onto a ladder.
2. Fully open the door and place a 2x4 (laid flat) under the rail. For one-piece doors without tracks, lay the 2x4 on it's side.

NOTE: A 2x4 is ideal for setting the distance between the rail and the door. If the ladder is not tall enough you will need help at this point. If the door hits the trolley when it is raised, pull the trolley release arm down to disconnect the inner and outer trolley. Slide the outer trolley toward the garage door opener. The trolley can remain disconnected until instructed.

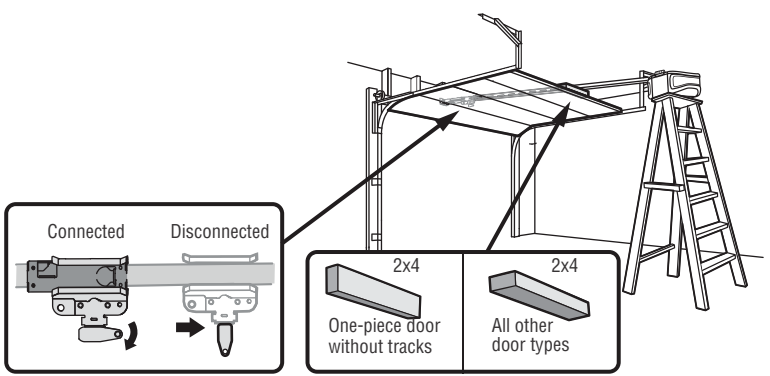

STEP 5 Hang the Garage Door Opener

⚠ WARNING

To avoid possible SERIOUS INJURY from a falling garage door opener, fasten it SECURELY to structural supports of the garage. Concrete anchors MUST be used if installing ANY brackets into masonry.

Hanging the garage door opener will vary depending on your garage. Below are three example installations. Your installation may be different. For ALL installations the garage door opener MUST be connected to structural supports. The instructions illustrate one of the examples below.

1. On finished ceilings, use the lag screws to attach a support bracket (not provided) to the structural supports before installing the garage door opener.
2. Make sure the garage door opener is aligned with the header bracket. Measure the distance from each side of the garage door opener to the support bracket.
3. Cut both pieces of the hanging bracket (not provided) to required lengths.
4. Attach the end of each hanging bracket to the support bracket with appropriate hardware (not provided).
5. Attach the garage door opener to the hanging brackets with the hex bolts, lock washers, and nuts.
6. Remove the 2x4 and manually close the door. If the door hits the rail, raise the header bracket.

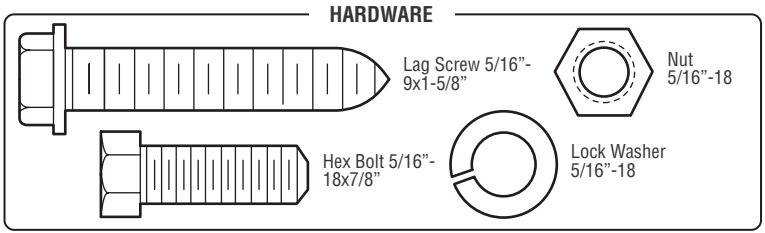

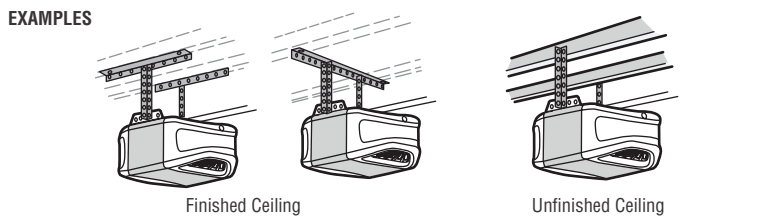

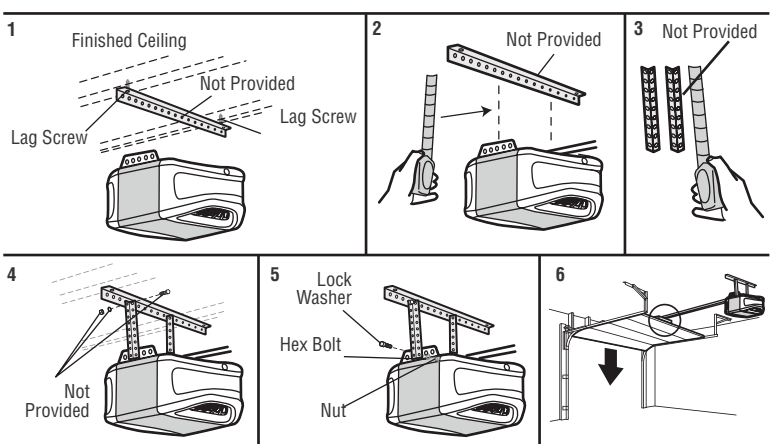

STEP 6 Install the Light Bulbs

⚠ CAUTION

To prevent possible OVERHEATING of the end panel or light socket:
- Use ONLY A19 light bulbs.
- DO NOT use incandescent bulbs larger than 100W.
- DO NOT use compact fluorescent light bulbs larger than 26W (100W equivalent).
- DO NOT use halogen bulbs.
- DO NOT use short neck or specialty light bulbs.

LED bulbs may cause remote control radio interference. Use ONLY LED bulbs recommended here: chamberlain.com/bulb.

1. Pull light lens down.
2. Insert light bulb.
3. Close light lens.

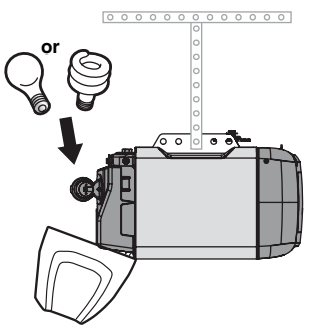

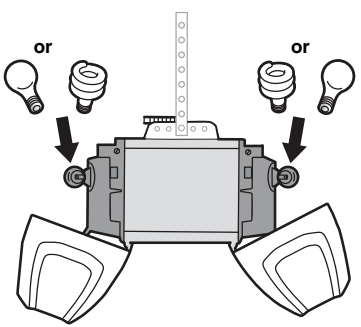

STEP 7 Attach the Emergency Release Rope and Handle

⚠ WARNING

To prevent possible SERIOUS INJURY or DEATH from a falling garage door:
- If possible, use emergency release handle to disengage trolley ONLY when garage door is CLOSED. Weak or broken springs or unbalanced door could result in an open door falling rapidly and/or unexpectedly.
- NEVER use emergency release handle unless garage doorway is clear of persons and obstructions.
- NEVER use handle to pull door open or closed. If rope knot becomes untied, you could fall.

1. Insert one end of the emergency release rope through the handle. Make sure that “NOTICE” is right side up. Secure with an overhand knot at least 1” (2.5 cm) from the end of the rope to prevent slipping.
2. Insert the other end of the emergency release rope through the hole in the trolley release arm. Mount the emergency release within reach, but at least 6 feet (1.83 m) above floor, avoiding contact with vehicles to prevent accidental release and secure with an overhand knot.

NOTE: If it is necessary to cut the emergency release rope, seal the cut end with a match or lighter to prevent unraveling. Ensure the emergency release rope and handle are above the top of all vehicles to avoid entanglement.

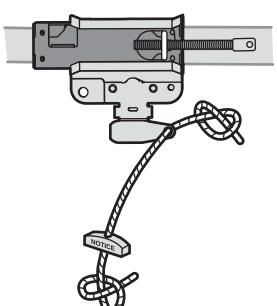

STEP 8 Install the Door Bracket

⚠ CAUTION

Fiberglass, aluminum or lightweight steel garage doors **WILL REQUIRE** reinforcement BEFORE installation of door bracket. Contact the garage door manufacturer or installing dealer for opener reinforcement instructions or reinforcement kit. Failure to reinforce the top section as required according to the door manufacturer may void the door warranty.

A horizontal and vertical reinforcement is needed for lightweight garage doors (fiberglass, aluminum, steel, doors with glass panel, etc.) (not provided). A horizontal reinforcement brace should be long enough to be secured to two or three vertical supports. A vertical reinforcement brace should cover the height of the top panel. Contact the garage door manufacturer or installing dealer for opener reinforcement instructions or reinforcement kit.

NOTE: Many door reinforcement kits provide for direct attachment of the clevis pin and door arm. In this case you will not need the door bracket; proceed to the next step.

OPTION A - SECTIONAL DOORS

1. Center the door bracket on the previously marked vertical centerline used for the header bracket installation. Note correct UP placement, as stamped inside bracket.
2. Position the top edge of the bracket 2”-4” (5-10 cm) below the top edge of the door, OR directly below any structural support across the top of the door.
3. Mark, drill holes and install as follows, depending on your door’s construction.

Metal or light weight doors using a vertical angle iron brace in the door panel support and the door bracket:

- Drill 3/16” fastening holes. Secure the door bracket using the two 1/4”-14x5/8” self-threading screws. (Figure 1)
- Alternately, use two 5/16”-18x2” bolts, lock washers and nuts (not provided). (Figure 2)

Metal, insulated or light weight factory reinforced doors:

- Drill 3/16” fastening holes. Secure the door bracket using the self-threading screws. (Figure 3)

Wood doors:

- Use top and bottom or side to side door bracket holes. Drill 5/16” holes through the door and secure bracket with 5/16”-18x2” carriage bolts, lock washers and nuts (not provided). (Figure 4)

NOTE: The 1/4”-14x5/8” self-threading screws are not intended for use on wood doors.

HARDWARE

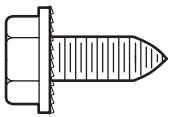

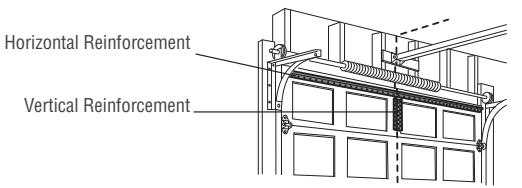

FIGURE 1

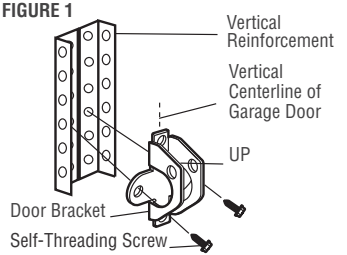

FIGURE 2

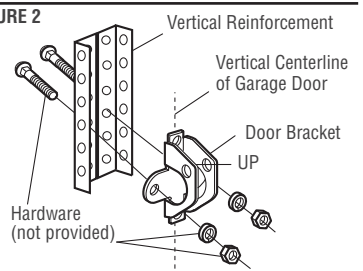

FIGURE 3

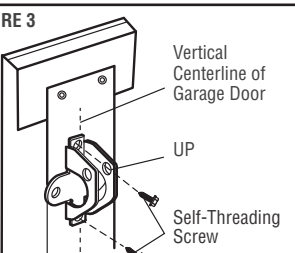

FIGURE 4

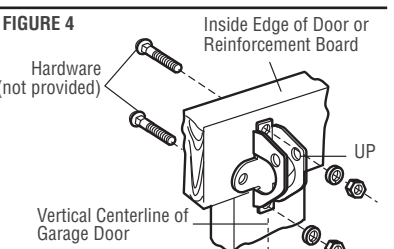

STEP 8 Install the Door Bracket (continued)

OPTION B - ONE-PIECE DOORS

1. Center the door bracket on the top of the door, in line with the header bracket as shown.
2. Mark either the left and right, or the top and bottom holes.

Metal Doors:

- Drill 3/16” pilot holes and fasten the bracket with the self-threading screws provided.

Wood Doors:

- Drill 5/16” holes and use 5/16”-18x2” carriage bolts, lock washers and nuts (not provided) or 5/16”x1-1/2” lag screws (not provided) depending on your installation needs.

NOTE: The door bracket may be installed on the top edge of the door if required for your installation. (Refer to the dotted line optional placement drawing.)

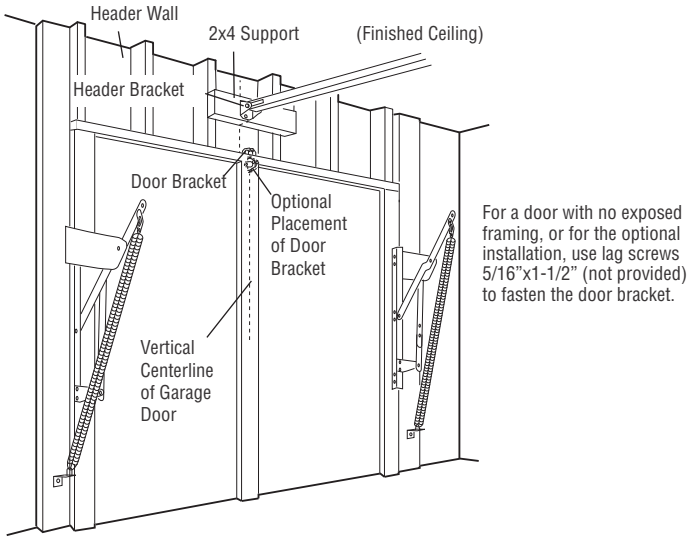

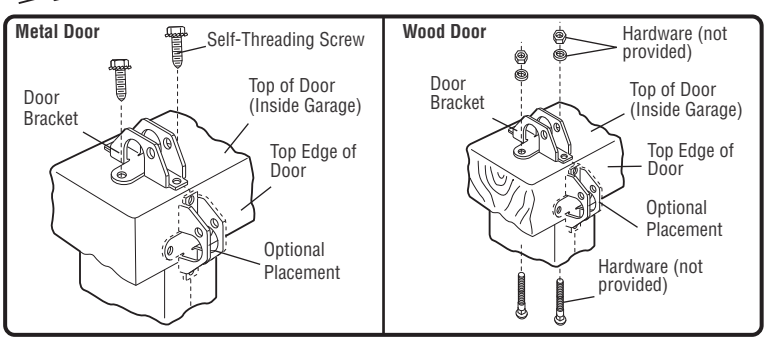

STEP 9 Connect the Door Arm to the Trolley

Installation will vary according to the garage door type. Follow the instructions which apply to your door.

OPTION A - SECTIONAL DOORS

IMPORTANT: The groove on the straight door arm MUST face away from the curved door arm.

1. Close the door. Disconnect the trolley by pulling the emergency release handle.
2. Attach the straight door arm to the outer trolley using the clevis pin. Secure with the ring fastener.
3. Attach the curved door arm to the door bracket using the clevis pin. Secure with the ring fastener.
4. Bring arm sections together. Find two pairs of holes that line up and join sections. Select holes as far apart as possible to increase door arm rigidity and attach using the bolts, nuts, and lock washers.
5. Pull the emergency release handle toward the garage door opener until the trolley release arm is horizontal. The trolley will re-engage automatically when the garage door opener is activated.

NOTE: If the holes in the curved door arm and the straight door arm do not align, reverse the straight door arm, select two holes (as far apart as possible) and attach using bolts, nuts, and lock washers. If the straight door arm is hanging down too far, you may cut 6" (15 cm) from the solid end.

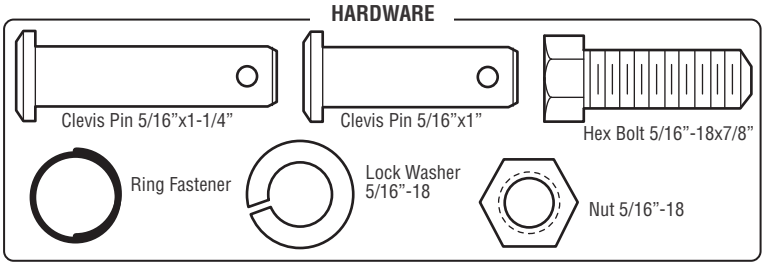

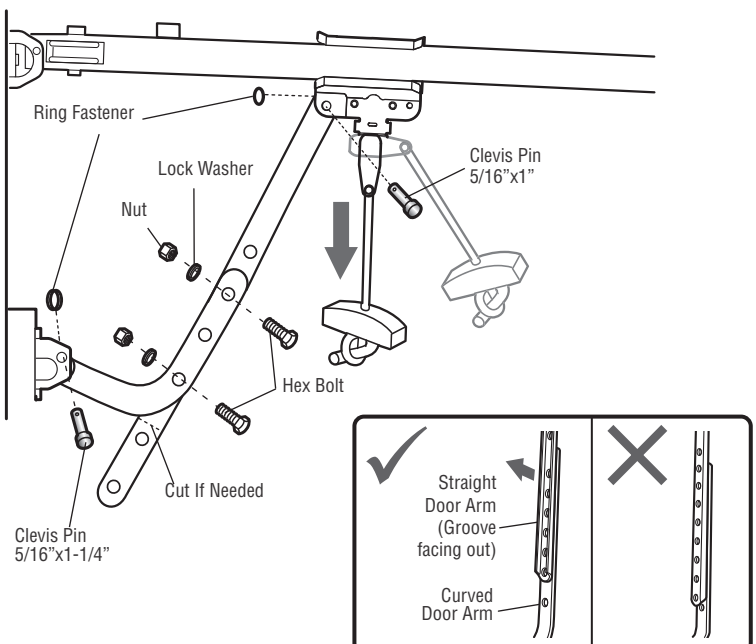

STEP 9 Connect the Door Arm to the Trolley (continued)

OPTION B - ONE-PIECE DOORS

IMPORTANT: The groove on the straight door arm MUST face away from the curved door arm.

1. Close the door. Disconnect the trolley by pulling the emergency release handle.
2. Fasten the straight door arm and the curved door arm together to the longest possible length (with a 2 or 3 hole overlap) using the bolts, nuts, and lock washers.
3. Attach the straight door arm to the door bracket using the clevis pin. Secure with the ring fastener.
4. Attach the curved door arm to the trolley using the clevis pin. Secure with the ring fastener.
5. Pull the emergency release handle toward the garage door opener until the trolley release arm is horizontal.

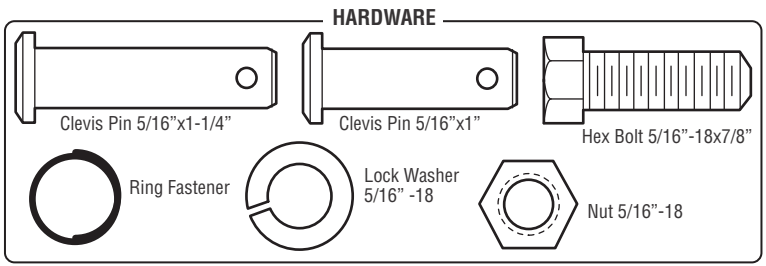

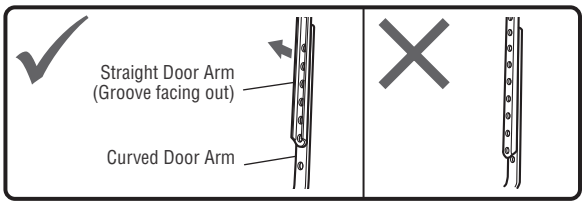

One-Piece Door without Track

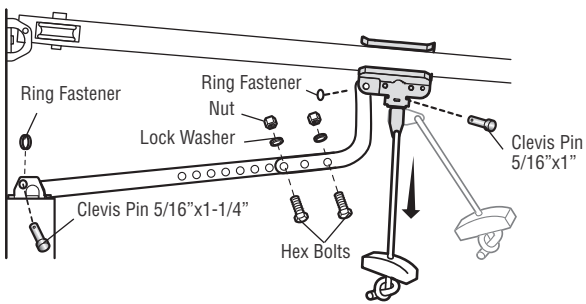

One-Piece Door with Track

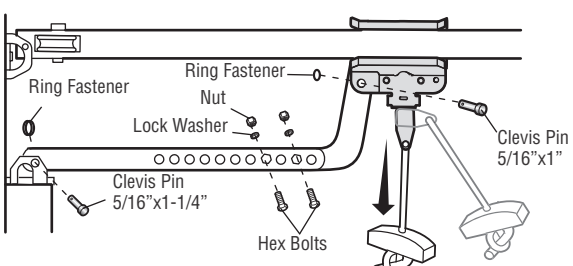

STEP 10 Install the Door Control

PUSH BUTTON DOOR CONTROL

⚠ ⚠ WARNING

To prevent possible SERIOUS INJURY or DEATH from electrocution:

- Be sure power is NOT connected BEFORE installing door control.
- Connect door control ONLY to 12 VOLT low voltage wires.

To prevent possible SERIOUS INJURY or DEATH from a closing garage door:

- Install door control within sight of garage door, out of reach of small children at a minimum height of 5 feet (1.5 m) above floors, landings, steps or any other adjacent walking surface, and away from ALL moving parts of door.
- NEVER permit children to operate or play with door control push buttons or remote control transmitters.
- Activate door ONLY when it can be seen clearly, is properly adjusted, and there are no obstructions to door travel.
- ALWAYS keep garage door in sight until completely closed. NEVER permit anyone to cross path of closing garage door.

INTRODUCTION

Install the door control within sight of the door at a minimum height of 5 feet (1.5 m) above floors, landings, steps or any other adjacent walking surface, where small children cannot reach, and away from the moving parts of the door.

NOTE: Your product may look different than the illustrations.

HARDWARE

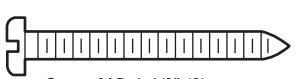

Screw 6ABx1-1/2” (2)

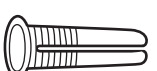

Drywall Anchors (2)

1. Strip 1/4” (6 mm) of insulation from one end of the wire and separate the wires.
2. Connect one wire to each of the two screws on the back of the door control. The wires can be connected to either screw.
3. Mount the door control with the hardware provided.

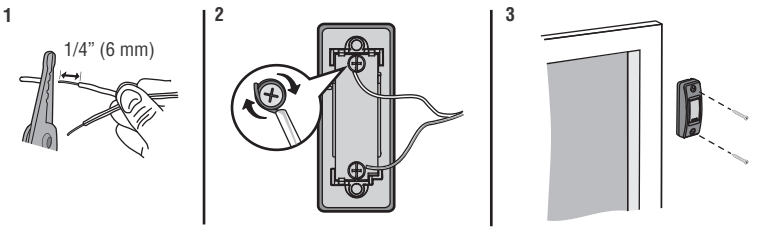

MULTI-FUNCTION CONTROL PANEL

⚠ ⚠ WARNING

To prevent possible SERIOUS INJURY or DEATH from electrocution:

- Be sure power is NOT connected BEFORE installing door control.
- Connect door control ONLY to 12 VOLT low voltage wires.

To prevent possible SERIOUS INJURY or DEATH from a closing garage door:

- Install door control within sight of garage door, out of reach of small children at a minimum height of 5 feet (1.5 m) above floors, landings, steps or any other adjacent walking surface, and away from ALL moving parts of door.
- NEVER permit children to operate or play with door control push buttons or remote control transmitters.
- Activate door ONLY when it can be seen clearly, is properly adjusted, and there are no obstructions to door travel.
- ALWAYS keep garage door in sight until completely closed. NEVER permit anyone to cross path of closing garage door.

INTRODUCTION

Older Chamberlain door controls and third party products are not compatible. Install door control within sight of garage door, out of reach of small children at a minimum height of 5 feet (1.5 m) above floors, landings, steps or any other adjacent walking surface, and away from ALL moving parts of door. For gang box installations it is not necessary to drill holes or install the drywall anchors. Use the existing holes in the gang box.

NOTE: Your product may look different than the illustrations.

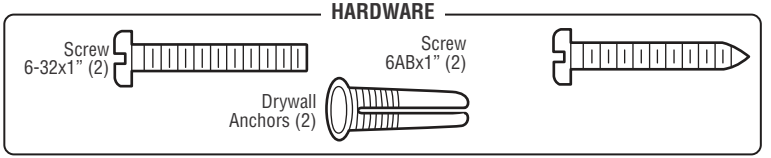

1. Strip 7/16” (11 mm) of insulation from one end of the wire and separate the wires.
2. Connect one wire to each of the two screws on the back of the door control. The wires can be connected to either screw. If your garage is pre-wired for the door control choose any two wires to connect, note which wires are used so the correct wires are connected to the garage door opener in a later step.
3. Mark the location of the bottom mounting hole and drill a 5/32” hole.
4. Install the bottom screw, allowing 1/8” (3 mm) to protrude from the wall.
5. Position the bottom hole of the door control over the screw and slide down into place.
6. Lift the push bar up and mark the top hole.
7. Remove the door control from the wall and drill a 5/32” hole for the top screw.
8. Position the bottom hole of the door control over the screw and slide down into place. Attach the top screw.

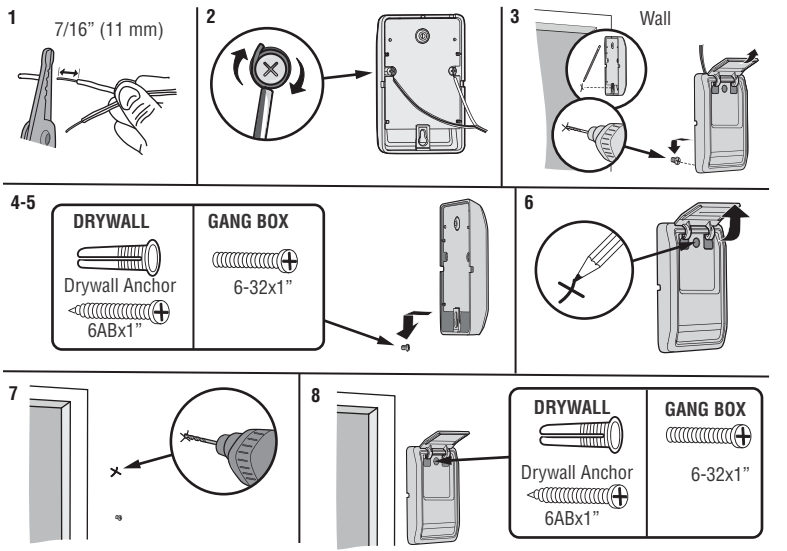

STEP 11 Wire the Door Control to the Garage Door Opener

1. Run the white and red/white wire from the door control to the garage door opener. Attach the wire to the wall and ceiling with the staple (not applicable for gang box or pre-wired installations). Do not pierce the wire with the staple as this may cause a short or an open circuit.
2. Strip 7/16” (11 mm) of insulation from the end of the wire near the garage door opener.
3. Connect the wire to the red and white terminals on the garage door opener. If your garage is pre-wired make sure you use the same wires that are connected to the door control. To insert or release wires from the terminal, push in the tab with screwdriver tip.

HARDWARE

Insulated Staple (Not Shown)

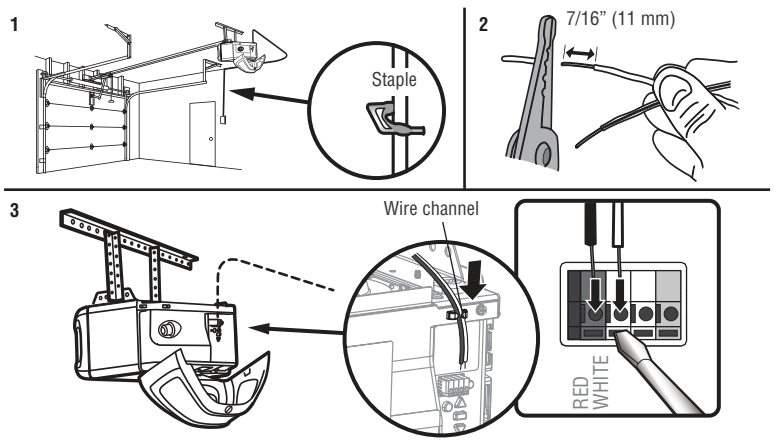

STEP 12 Attach the Warning Labels

1. Attach the entrapment warning label on the wall near the door control with tacks or staples.
2. Attach the manual release/safety reverse test label in a visible location on the inside of the garage door.

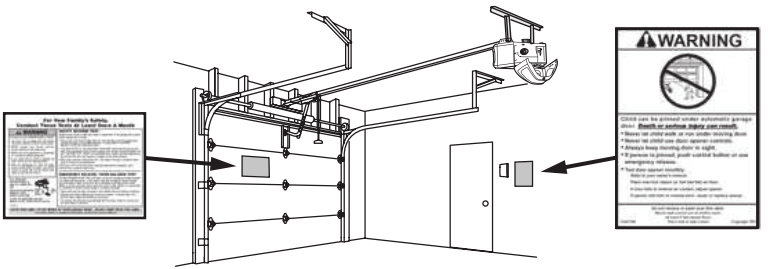

STEP 13 Install the Protector System®

⚠ WARNING

Be sure power is NOT connected to the garage door opener BEFORE installing the safety reversing sensor. To prevent SERIOUS INJURY or DEATH from closing garage door:

- Correctly connect and align the safety reversing sensor. This required safety device MUST NOT be disabled.
- Install the safety reversing sensor so beam is NO HIGHER than 6” (15 cm) above garage floor.

IMPORTANT: The safety reversing sensors MUST be connected and aligned correctly before the garage door opener will move in the down direction.

The Protector System® includes two safety reversing sensors which use a light beam to prevent the garage door from closing. The sending sensor (amber LED) transmits the beam to the receiving sensor (green LED) when both are powered and aligned. If an obstruction breaks the light beam while the door is closing, the door will stop, and reverse to the full open position.

When installing the safety reversing sensors, check:

- Sensors are installed INSIDE the garage.
- Sensor lenses are facing each other. ***IMPORTANT: Do not allow direct sunlight to the receiving sensor (green LED).***
- Sensor beam is NO HIGHER than 6” (15 cm) above the floor and the light beam is unobstructed.

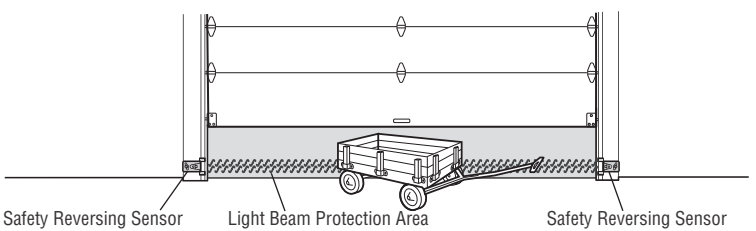

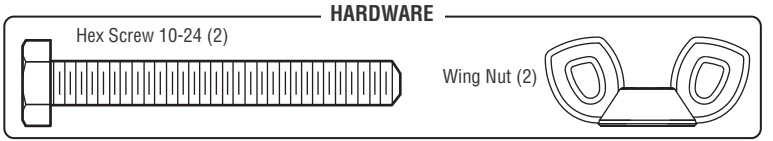

The safety reversing sensors are designed to clip onto the door track with the provided sensor brackets. If the door track will not support the sensor bracket a wall installation is recommended. The sensor beam should be NO HIGHER than 6” (15 cm) above the floor.

DOOR TRACK INSTALLATION

1. Slide the curved arms of the sensor bracket around the edge of the door track. Snap into place so that the sensor bracket is flush against the track.
2. Slide the hex screw through the sensor.
3. Attach the sensor to the bracket with the wing nut. Make sure the lens is not obstructed by the bracket.

Repeat the steps with the other sensor on the opposite door track. Both lenses must face each other.

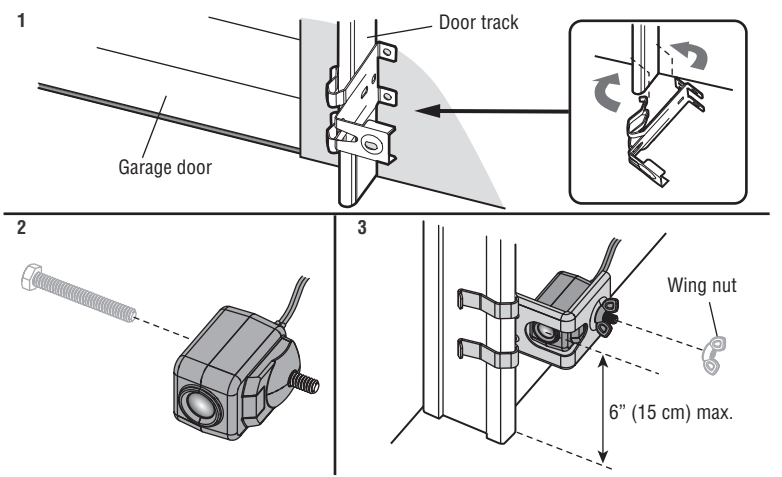

STEP 13 Install the Protector System (continued)

WALL OPTION

Make sure the brackets on each side are clear of the door track and have the same amount of clearance so the sensors will align correctly. If additional clearance is needed, use extension brackets 041A5281-1 (not provided) or wood blocks.

1. Attach the sensor bracket against the wall with two lag screws (not provided).
2. Slide the hex screw through the sensor.
3. Attach the sensor to the bracket with the wing nut. Make sure the lens is not obstructed by the bracket.

Repeat the steps with the other sensor on the opposite side of the garage door. Both lenses must face each other.

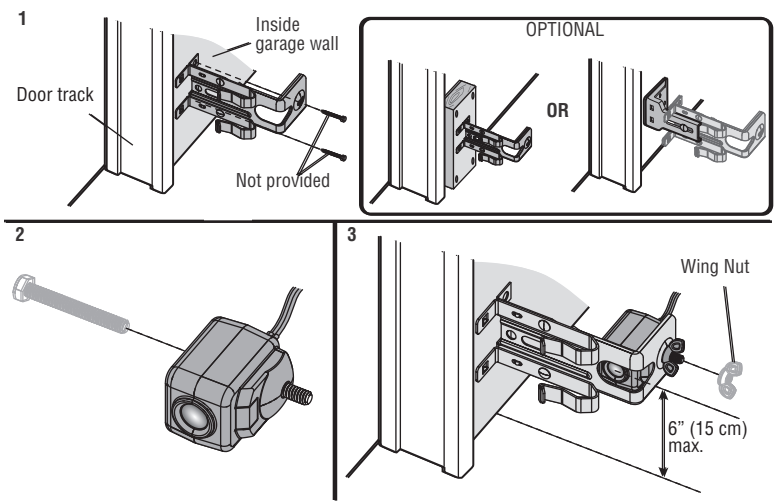

FLOOR OPTION

1. Measure the position of both sensor brackets so they will be the same distance from the wall and not obstructed.
2. Attach the bracket to the floor with concrete anchors (not provided).
3. Slide the hex screw through the sensor.
4. Attach the sensor to the bracket with the wing nut. Make sure the lens is not obstructed by the bracket.

Repeat the steps with the other sensor on the opposite side of the garage door. Both lenses must face each other.

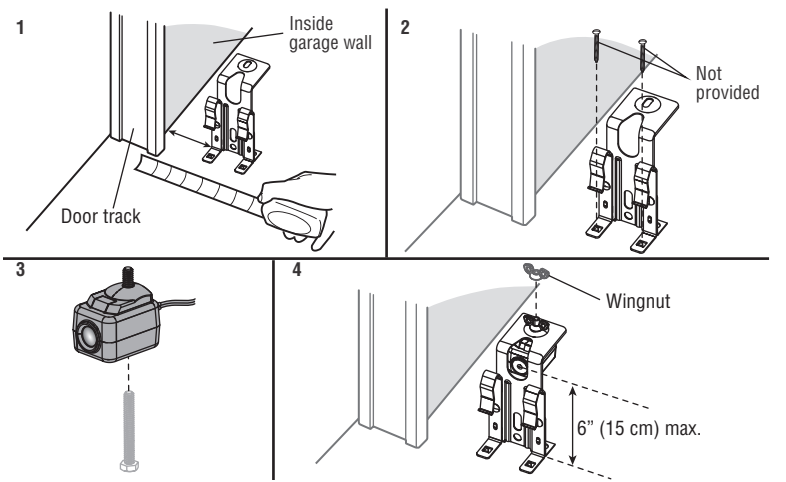

STEP 14 Wire the Safety Reversing Sensors

If your garage has pre-installed wiring for the safety reversing sensors, see OPTION B - PRE-WIRED INSTALLATION page 29.

OPTION A - INSTALLATION WITH NO PRE-WIRING

1. Run the wire from both sensors to the garage door opener. Attach with staples, but DO NOT puncture the wire.
2. Separate the sensor wires and strip insulation from each end. Twist the two white wires together. Then twist the two white/black wires together.
3. Using a screwdriver, push in the terminal tabs, and insert the white wires into the white terminal. Insert the white/black wires into the grey terminal.

HARDWARE

Insulated Staple (Not Shown)

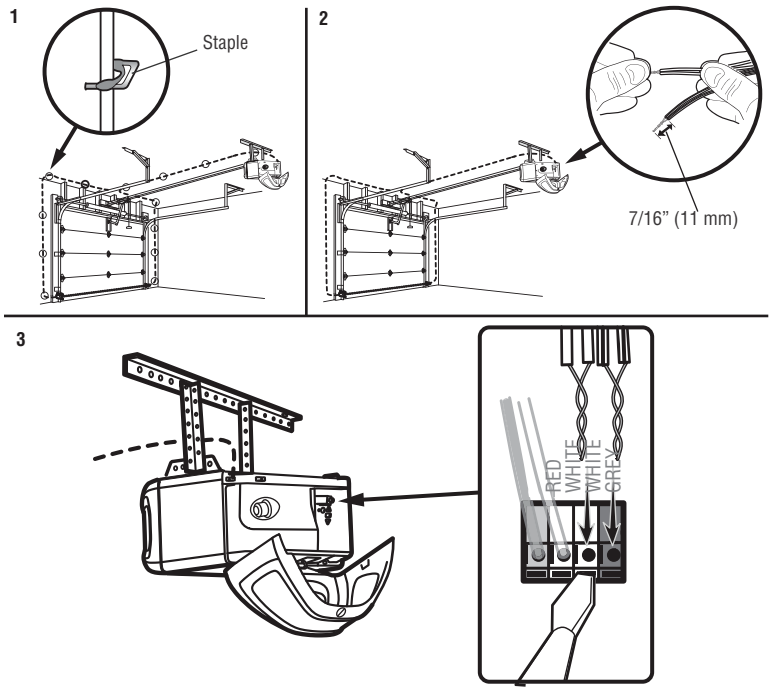

STEP 14 Wire the Safety Reversing Sensors (continued)

OPTION A - PRE-WIRED INSTALLATION

1. Cut the sensor wires, making sure there is enough wire to reach the pre-installed wires from the wall.
2. Separate the sensor wires and strip insulation from each end. Choose two of the pre-installed wires and strip insulation from each end. Choose the same color pre-installed wires for each sensor.
3. Connect the pre-installed wires to the sensor wires with wire nuts making sure the colors correspond for each sensor.
4. At the garage door opener, strip the end of the wires previously connected to the sensors. Twist the like-colored wires together.
5. Using a screwdriver, push in the terminal tabs, and insert the wire color connected to the sensor's white wire into the white terminal. Insert the other wire color connected to the sensor's white/black wire into the grey terminal.

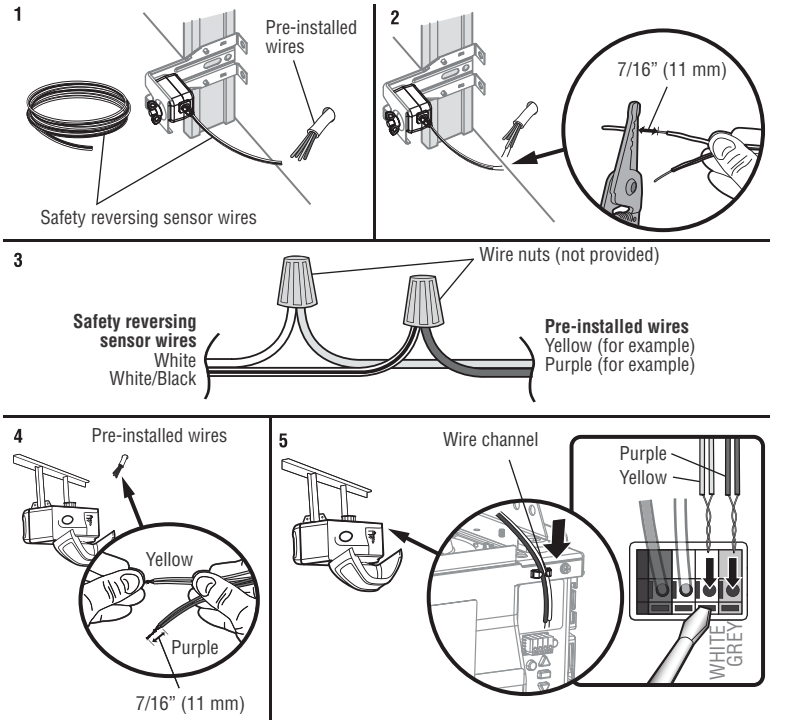

STEP 15 Connect Power

⚠ WARNING

To prevent possible SERIOUS INJURY or DEATH from electrocution or fire:

- Be sure power is NOT connected to the opener, and disconnect power to circuit BEFORE removing cover to establish permanent wiring connection.
- Garage door installation and wiring MUST be in compliance with ALL local electrical and building codes.
- NEVER use an extension cord, 2-wire adapter, or change plug in ANY way to make it fit outlet. Be sure the opener is grounded.

To avoid installation difficulties, do not run the opener at this time.
To reduce the risk of electric shock, your garage door opener has a grounding type plug with a third grounding pin. This plug will only fit into a grounding type outlet. If the plug doesn't fit into the outlet you have, contact a qualified electrician to install the proper outlet.

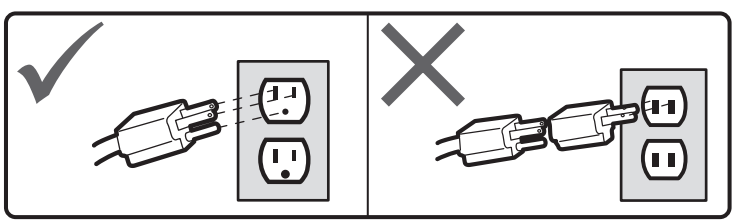

THERE ARE TWO OPTIONS FOR CONNECTING POWER:

OPTION A- TYPICAL WIRING

1. Plug in the garage door opener into a grounded outlet.
2. DO NOT run garage door opener at this time.

OPTION B - PERMANENT WIRING

If permanent wiring is required by your local code, refer to the following procedure. To make a permanent connection through the 7/8-inch hole in the top of the motor unit (according to local code):

1. Remove the motor unit cover screws and set the cover aside.
2. Remove the attached 3-prong cord.
3. Connect the black (line) wire to the screw on the brass terminal; the white (neutral) wire to the screw on the silver terminal; and the ground wire to the green ground screw. The opener must be grounded.
4. Reinstall the cover.

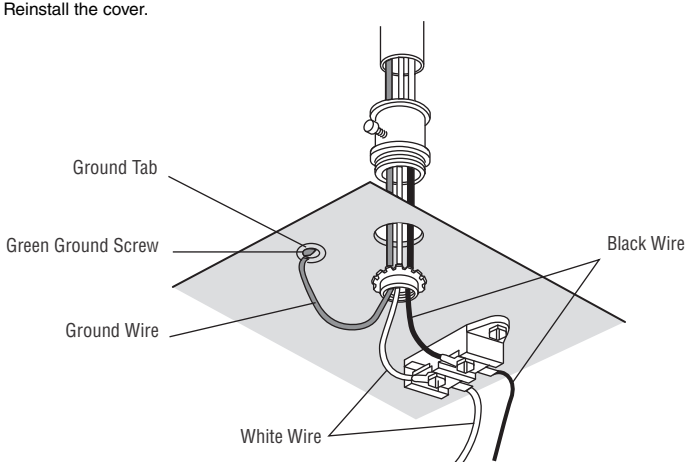

STEP 16 Align the Safety Reversing Sensors

IMPORTANT: The safety reversing sensors MUST be connected and aligned correctly before the garage door opener will move in the down direction.

When the garage door opener has power, check the safety reversing sensors. If the sensors are aligned and wired correctly, both LEDs will glow steadily.

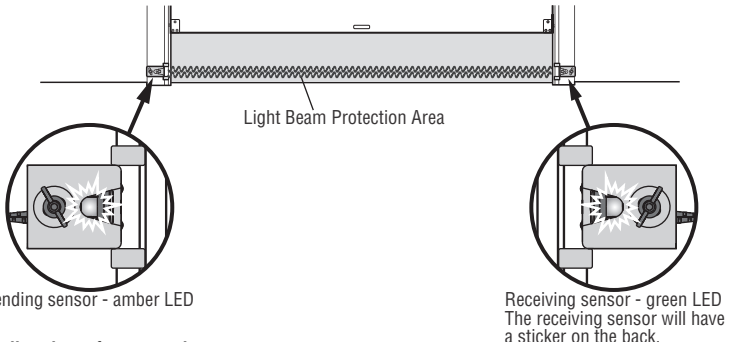

To align the safety reversing sensors:

1. Loosen the wing nuts.
2. Adjust the sensors up or down until both LEDs glow steady indicating alignment.
3. Tighten the wing nut to secure the sensor.

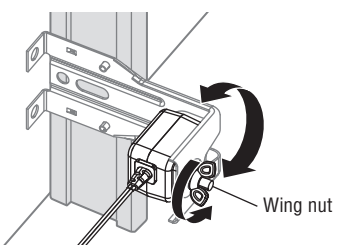

SAFETY SENSOR TROUBLESHOOTING

If either of the sensor LEDs are off, there is no power to the sensor:

1. Check that you have power to the garage door opener.
2. Check the sensor wire is not shorted or broken.
3. Check that the sensors are wired correctly; white wires to white terminal and white/black wires to grey terminal.

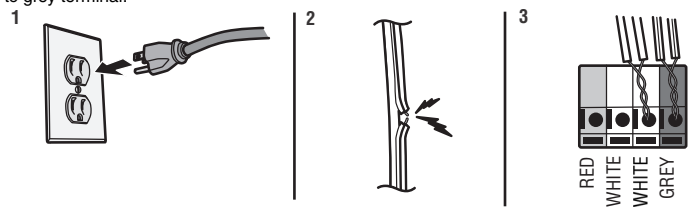

If the green receiving sensor LED is blinking, the sensors are obstructed or misaligned:

1. Check for obstructions in the sensor light beam.
2. Align the sensors.
3. If the receiving sensor (green LED) faces direct sunlight, switch the receiving sensor with the sending sensor and repeat STEP 12 Install the Protector System® page 27 to assure proper operation.

STEP 17 Ensure the Door Control is Wired Correctly

If the door control has been installed and wired correctly, the command LED on the control panel will blink or the LED behind the push button will blink if installed correctly.