Installation (continued)

1 Determine Location for Operator

Check the national and local building codes before installation.

1. Lay out the concrete pad.
2. Install the electrical conduit.
3. Pour a concrete pad (reinforced concrete is required).

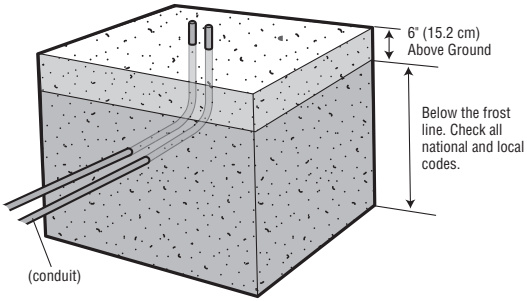

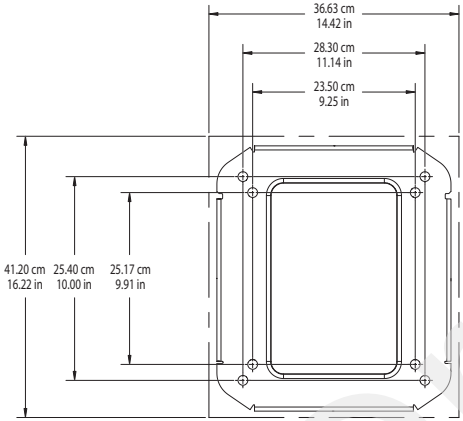

811®
Know what's below.
Call before you dig.

2 Install the Operator

Attach the operator to the concrete pad with appropriate fasteners.

1. If replacing an existing operator, determine whether the existing bolt mounting pattern is compatible with the operator.
2. If installing a new operator, use the "Bolt Mounting Pattern Reference Cardboard" to mark the locations for drilling the bolts.
3. Drill the bolts into the concrete. Use the 4 oversized washers when attaching the operator to the pad.

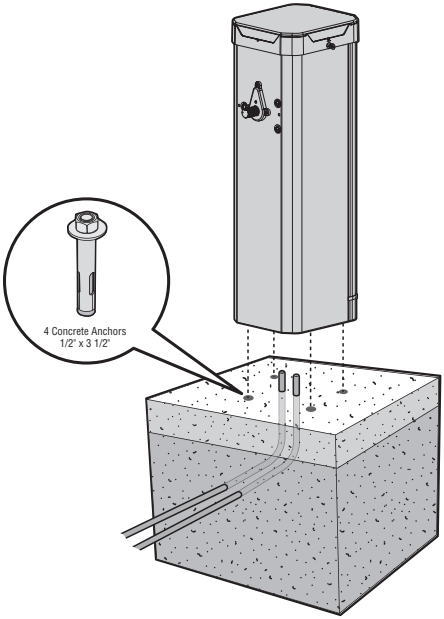

Draft

Installation (continued)

3 Adjust the Counterbalance Spring Assembly

The counterbalance spring assembly comes from the factory in the right handed configuration with the number of springs to support the longest arm compatible with the model and most accessories installed.

1. Verify arm length, list of accessories attached to the arm, and handing direction. Use the table below to identify how many springs should be used. See "Operator and Arm Installation Options" on page 12 for details on handing.

   a. If springs need to be removed, continue to "Modify Spring Count" on page 16.

Spring Count Table						
Functional Arm Length (ft)*	**Bare Arm**	**One LED Strip**	**Foam Insert**	**Foam Insert, One LED Strip**	**Edge**	**Edge, One LED Strip**
8	3	3	3	3	3	3
9	3	3	3	4	4	4
10	4	4	4	4	5	5
11	5	5	5	5	6	6
12	5	5	6	6	7	7
13	6	6	7	7	8	8
14	7	7	8	8	9	9
15	7	8	9			
16	8	9	11			
17	8	11	12			
18	11	12	13			
19	12	13	15			
20	14	14	15			
21	15					
22	16					
23	18					
24	19					

ATTENTION: *Maximum arm length for PBG models is 12', CBG models is 14', and IBG models is 24'.*

Draft

Installation (continued)

⚠ WARNING

Springs may be under tension. The tension on the counterbalance spring system must be released or removed prior to loosening or removing the bolts or any components of the spring system. See “Removing Spring Tension” on page 12.

MODIFY SPRING COUNT

1. Remove the hub by loosening the two set screws and sliding it off (see image A).
2. Remove the end plate by removing the two screws (see image A).
3. Remove unneeded springs and spacers by sliding them off (see image B).
4. Add retention collars (provided in the pack in bag) in place of the removed springs. These retention collars prevent the springs from sliding out of place during operation (see image C).
5. Replace end plate and tighten the two end plate screws to 30 ft-lbs (see image C.)
6. Replace hub and tighten the two set screws to 30 ft-lbs (see image C).

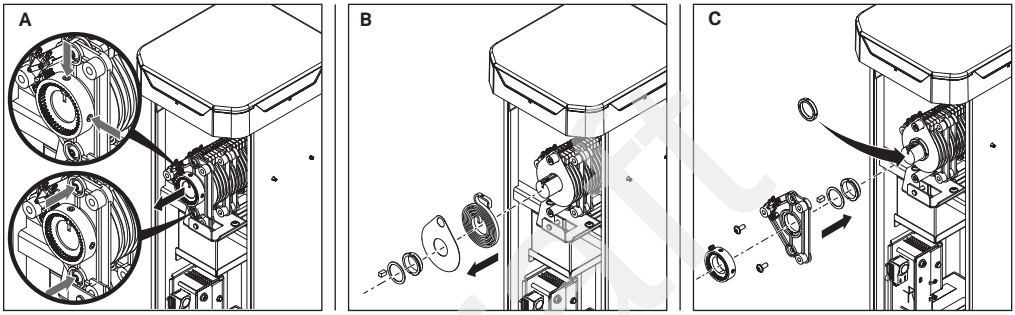

REVERSE THE SPRING HANDING

1. Remove the counterbalance spring assembly by removing three screws that attach the counterbalance spring assembly to the gearbox. Take care not to damage the switch harness.
2. Rotate the counterbalance spring assembly 180° so that the two end plates swap position. The spring arrows should still be on the top of the assembly after rotating.
3. Install the three attachment screws again to secure the counterbalance spring assembly to the gearbox.

Draft

Installation (continued)

4 Prepare the Arm

1. Reference arm installation instructions included with the arm packaging. Arm should be mounted with the edge mounting channel facing toward the ground.
2. Arm Sensor Setup: The Breakaway Arm Setup uses a breakaway sensor that is located on the arm bracket and a magnet that is located on the arm to detect the presence of the arm. **This magnet must be in place for all arm bracket configurations**.**

   ****If the sensor is not installed, the operator will not run.**

NOTE: *The magnet position is fixed in the bracket. The position of the magnet on the arm needs to align with the magnet in the bracket. The two flat portions should make contact as shown in figure.*

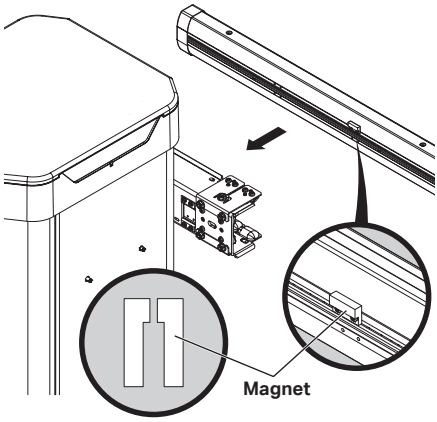

NOTE ON BREAKAWAY OPTION

The barrier arm may be installed with or without the Arm Breakaway setup.

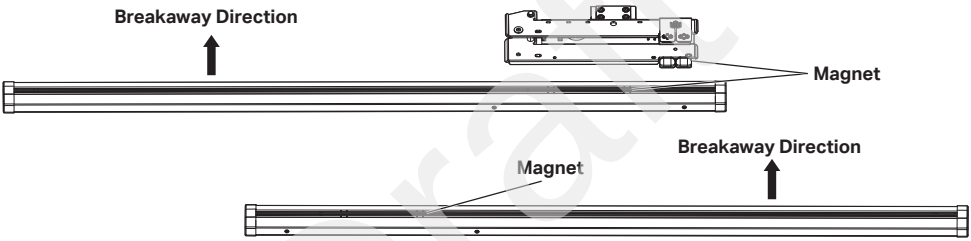

Draft

5 Install the Barrier Arm

ATTENTION: *Torque the 3 bolts fastening the counterbalance spring assembly to 30ft*lbs. If springs are removed, the hub set screws and the 2 end plate bolts need to be torqued to 30ft*lbs.*

ATTENTION: *Before installing the arm, verify the arrow printed on the springs points in the direction of the arm in the closed position. If it does not, refer to "Reverse the Spring Handing" on page 16 for instructions.*

1. Ensure the operator is powered off.
2. Remove the operator cabinet door and set aside.
3. Unpack the arm bracket and hardware from the operator cabinet.
4. Cut the barrier arm to desired length if modification is necessary.

   IMPORTANT: *Do not cut end with mounting system.*
5. Verify that the appropriate number of counterbalance springs are installed and align the arrows to match the intended arm direction. If the arrows pointing opposite the intended arm direction, remove the counterbalance spring assembly and flip to ensure the arrows align with the intended arm direction. Follow the instructions and warnings in "Modify Spring Count" on page 16.
6. Loosen the four screws on the arm bracket remove the hinge screw from the arm bracket.
7. Slide the arm bracket on to the output shaft of the operator. Do NOT tighten down the hub bolts. The arm bracket should freely rotate at this point.
8. With the far end of the arm resting on the ground, push the arm into the arm bracket. Be sure to install the arm with the arm magnet toward the operator.

Installation (continued)

9. Choose the arm installation type using the table below and follow the corresponding instructions:

Swingaway Arm Installation (compatible with PBG and CBG models)	**Breakaway Arm Installation (recommended for PBG and CBG models)**	**Fixed Arm Installation (required for IBG and compatible with PBG and CBG models) ** Permanent damage may occur to the system if the arm is struck.**
1. Install the pivot screw (removed earlier) through the bracket and arm. 2. Tighten the nut to the hinge screw.	1. Install the two 3-inch carriage bolts through the back of the arm bracket and through the arm. 2. Install a flat washer and nylon nut to each. 3. Ensure that pivot pin is not in place. If it is, the arm will pivot when dislodged instead of being dislodged perpendicular to the lane.	1. Install the pivot bolt to the back end of the arm and secure with a flat washer and metal nut. 2. Fix the breakaway shut by installing a carriage bolt through the back of the arm bracket and through the arm. 3. Install a flat washer and metal nut to each.
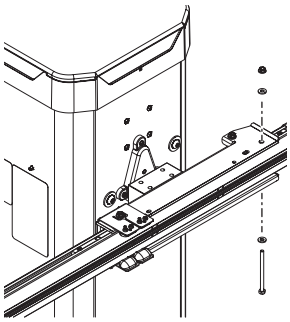	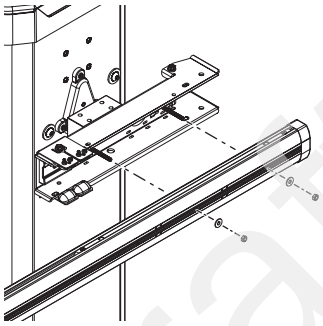	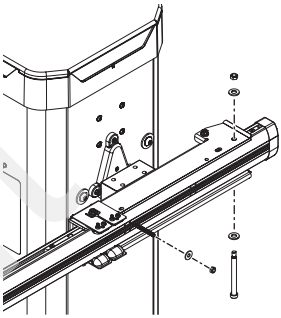
Do not tighten hub bolts on output shaft until rotated to the vertical position.		

10. Rotate the arm bracket vertically so that the arm is in the open position.

    NOTE: *Fasten each of the four hub bolts with the arm in vertical postion.*

11. Torque each of the four hub bolts to 60 ft-lbs (this torque is critical).
12. Connect the operator wiring harness to the barrier arm wire harness.
13. Route the arm bracket wiring harness through the hold down. Install harness hold down to the appropriate location for the handing of the operator using the standoff and washer (see image below).
14. If an LED arm is being installed, connect the arm LED harness to the arm bracket harness (see detailed instructions included in the arm documentation).
15. Turn on barrier arm gate operator power.
16. Set the Arm length and the arm speed on the LCD Menu.

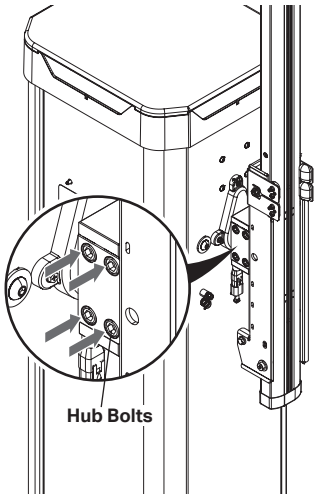

Draft

Installation (continued)

FIXED BARRIER ARM SENSOR SETUP

The Fixed Barrier Arm Sensor Setup also requires the use of a breakaway sensor that is located on the arm bracket and a magnet that is located on the arm to detect the presence of the fixed arm.

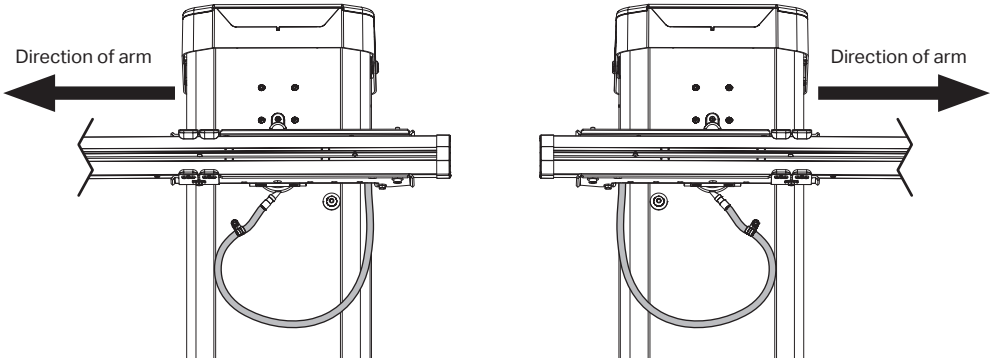

6 Install External Safety Devices

WIRE SAFETY DEVICES

There are three options for external safety devices depending on the specific device and how the device functions. Refer to the manual included with your device for more information. These device inputs are for monitored devices, which include pulsed photoelectric sensors, resistive edge sensors, and pulsed edge sensors. **Only one monitored safety device may be wired to each input.** Additional monitored safety devices may be wired to the expansion board.

NOTE: *Board inputs for safety devices are yellow.*

NOTE: *Any monitored devices that are removed from the unit need to be unlearned in the menu. Otherwise the operator will not function.*

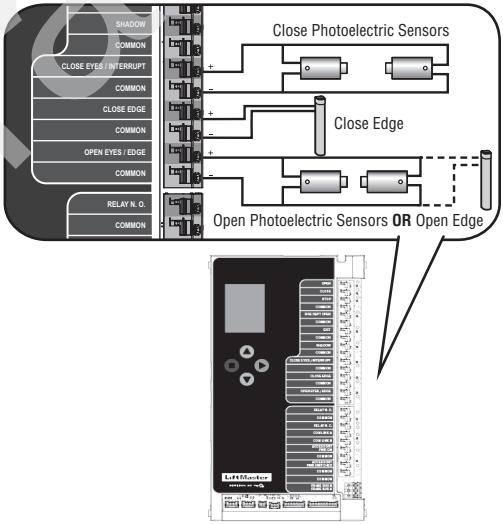

MAIN CONTROL BOARD

CLOSE EYES/INTERRUPT

(2 Terminals) The CLOSE EYES/INTERRUPT input is for photoelectric sensor detection for the close direction. When an obstruction is sensed during barrier gate closing, the barrier gate opens to the full open position and resets the Timer-to-Close. This input is disregarded during barrier gate opening.

CLOSE EDGE

(2 Terminals) The CLOSE EDGE input is for edge sensor detection for the close direction. When an obstruction is sensed during barrier gate closing, the barrier gate reverses to the full open position and resets the Timer-to-Close. This input is disregarded during barrier gate opening.

OPEN EYES/EDGE

(2 Terminals) The OPEN EYES/EDGE input is for photoelectric sensor or edge sensor detection for the open direction. When an obstruction is sensed during barrier gate opening, the barrier gate stops. This input is disregarded during barrier gate closing.

Draft

Installation (continued)

EXPANSION BOARD

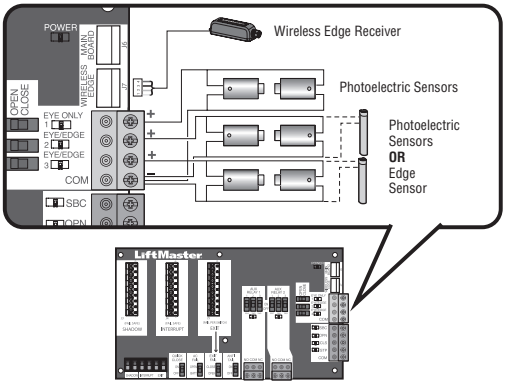

EYE ONLY and COM: Open or Close Direction Photoelectric Sensors, the functionality is based on the switch settings (located next to the terminals).

- **Switch set to CLOSE:** Barrier gate reverses fully when an obstruction is sensed.
- **Switch set to OPEN:** Gate stops when an obstruction is sensed.

EYE/EDGE and COM: Open or Close Direction Photoelectric Sensors or Edge Sensor, the functionality is based on the switch settings (located next to the terminals).

- **Switch set to CLOSE:** Barrier gate reverses fully when an obstruction is sensed.
- **Switch set to OPEN:** Gate stops when an obstruction is sensed.

WIRELESS EDGE: Connection for wireless edge receiver.

NOTE: *ONLY one wireless edge receiver may be connected to an operator. Up to 4 wireless edge transmitters LMWETXU may be programmed to the receiver.*

ACCESSORY WIRING

All control wiring used to connect external devices to Class 2 circuits of the operator must be (QPTZ) Power-Limited Circuit Cables, Type CL2, CL2P, CL2R, or CL2X or other cable with equivalent or better electrical, mechanical, and flammability ratings.

EXTERNAL CONTROL DEVICES

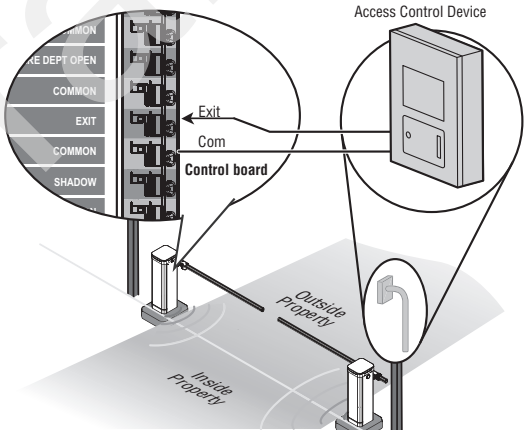

EXIT (2 Terminals)

This input is a soft open command (maintained switch does not override external safeties and does not reset alarm condition). Used for exit probe, telephone entry, external exit loop detector, or any device that would command the gate to open.

- Opens a closed or closing gate and holds open an open gate, if maintained, pauses Timer-to-Close at OPEN limit.

SHADOW (2 Terminals)

This input is used for external shadow loop detector when loop is positioned under the swing of the gate.

- Holds open gate at open limit.
- Only active when the gate is at the OPEN limit, disregarded at all other times.
- Pauses Timer-to-Close at OPEN limit.

INTERRUPT (2 Terminals)

This input is used for an external interrupt loop detector when loop is on the outside of the gate.

- Holds open gate at open limit.
- Stops and reverses a closing gate to open limit.
- Pauses Timer-to-Close at OPEN limit, activates quick close and anti-tailgate features when enabled on the expansion board.

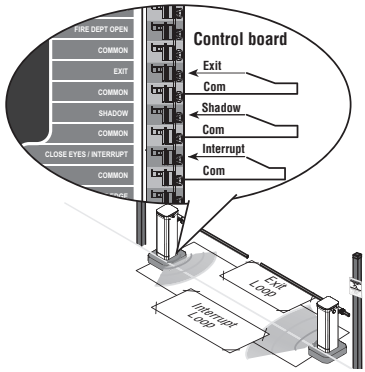

Draft

Installation (continued)

MISCELLANEOUS WIRING

Three Button Control Station (4 Terminals)

- OPEN and COM: Opens a closed gate. Hard open (maintained switch overrides external safeties). If maintained, pauses Timer-to-Close at OPEN limit. Opens a closing gate and holds open an open gate (within line-of-sight). Re-enables Timer-To-Close at OPEN limit if canceled by Stop command.
- CLOSE and COM: Closes an open gate. Hard close (maintained switch overrides external safeties within line-of-sight)
- STOP and COM: Stops a moving gate. Hard stop (maintained switch overrides Open and Close commands). Cancels Timer-to-Close at OPEN limit. Overrides Open and Close commands (within line-of-sight).

Fire Department Open Input (2 Terminals)

- Acts as hard open.
- Maintained input overrides (ignores) external safeties (photoelectric sensor and edge), pauses Timer-to-Close momentary input logic as single button control and safeties remain active, re-enables Timer-to-Close.

Accessory Power Class 2 Supply 24 VDC, MAX 1 Amp (4 Terminals)

- SWITCHED: Switched ON with gate motion and at the open limit when Timer-to-Close is active. Turns off 5 seconds after motion.
- UNSWITCHED: 24 VDC voltage out to power accessories, always ON.

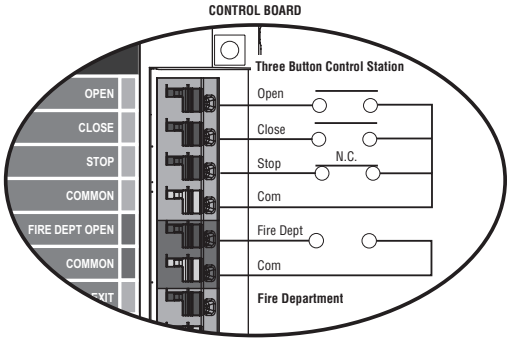

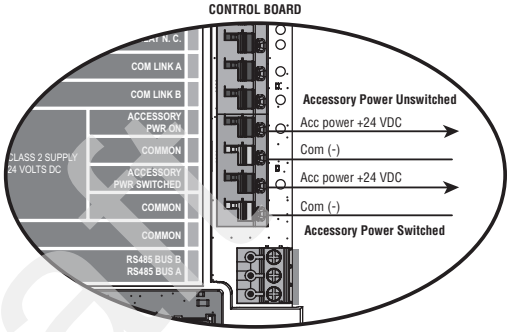

Draft

Installation (continued)

⚠ CAUTION

- To AVOID damaging the circuit board, relays or accessories, DO NOT connect more than 42 VDC (32 VAC) to the AUX relay contact terminal blocks.

EXPANSION AND RELAY ADAPTER BOARDS OVERVIEW

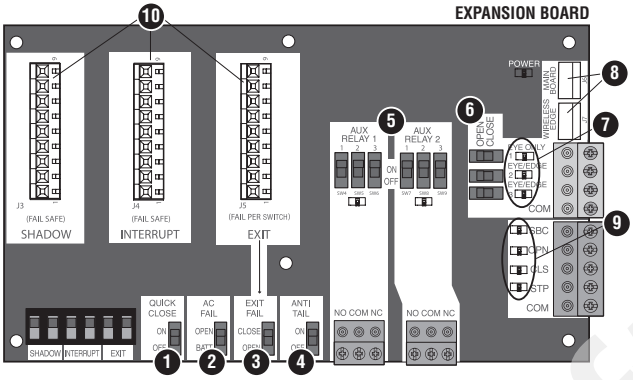

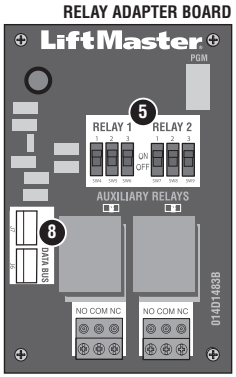

1. **QUICK CLOSE switch:**
   - OFF: No change to the gate's normal operation.
   - ON: When Interrupt loop is deactivated it causes an opening or a stopped gate to close (ignores the Timer-to-Close).
2. **AC FAIL switch:**
   - OPEN: Loss of AC power causes the gate to open approximately 15 seconds after AC power fail and remain OPEN until AC power is restored (enabling the Timer-to-Close).
   - BATT: With loss of AC power, gate remains in present position and operator is powered from batteries.
3. **EXIT FAIL switch:** When set to OPEN, if the EXIT plug-in loop detector (Model LOOPDETLM) detects a fault, then the gate opens and remains open until fault is cleared. When set to CLOSE, then plug-in EXIT loop detector faults are ignored (EXIT loop is faulted and inoperative).
4. **ANTI-TAIL switch:**
   - OFF: When Interrupt loop is activated it causes a closing gate to stop and reverse.
   - ON: When Interrupt loop is activated it causes a closing gate to pause. Once the vehicle is clear the gate continues to close.
5. **AUX RELAY switches:** Set the AUX RELAY switches as needed to obtain the desired function as shown on the following page.
6. **EYE/EDGE switches:** Set the EYE/EDGE switches as needed to obtain the desired OPEN or CLOSE functionality.
7. **1, 2, and 3 LEDs:** LEDs indicating the status of the EYE/EDGE inputs. Also used to check the firmware version of the expansion board:
   a. Locate the 1, 2, and 3 LEDs on the expansion board.
   b. Disconnect AC/DC power to the main control board for 15 seconds.
   c. Connect power. The 1, 2, and 3 LEDs flash in sequence until the main control board firmware revision is displayed. When the green POWER LED glows solid the LED 1 flashes the version number, then stops, then the LED 2 flashes the revision number. (For example: For version 5.1 when the green POWER LED is solid the LED 1 flashes 5 times, then stop, then the LED 2 flashes once).
8. **J6 and J7 inputs:** Communication bus connects the main control board, expansion board, or relay adapter board. Also connects LiftMaster wireless edge receiver LMWEKITU.

   NOTE: *ONLY one wireless edge receiver may be connected to an operator. Up to 4 wireless edge transmitters LMWETXU may be programmed to the receiver.*
9. **Input LEDs:** LEDs indicating the status of the SBC, OPN, CLS, and STP inputs.
10. **Loop detector inputs:** Inputs for the Plug-In Loop Detectors (Model LOOPDETLM).

Draft

Installation (continued)

AUXILLARY RELAYS

The expansion board and relay adapter board provide Normally Open (N.O.) and Normally Closed (N.C.) relay contacts to control external devices, for connection of Class 2, low voltage (42 VDC [34 VAC] max 5 Amps) power sources only. Function of relay contact activation determined by switch settings.

AUX Relay Setting	Switch Settings			AUX Relay 1	AUX Relay 2
	1	2	3		
Off / SAMS Soft Open Output	OFF	OFF	OFF	Relays off (default). When SAMS is enabled in LCD Menu, pulses on Soft Open. Use with SAMS (Sequence Access Management System, jointly with swing / slide gate operators).	
Open Limit Switch	OFF	OFF	ON	Energizes at open limit.	
Close Limit Switch	OFF	ON	OFF	Energizes when not at close limit. For an additional audible or visual display, connect an external light (low voltage).	
Gate Motion	OFF	ON	ON	Energizes when motor is on (gate in motion). For an additional audible or visual display, connect an external buzzer or light (low voltage).	
Pre-Motion Delay - Expansion Board Only	ON	OFF	OFF	Energizes 3 seconds before gate motion and remains energized during gate motion. The onboard alarm sounds. For an additional audible or visual display, connect an external buzzer or light (low voltage).	Energizes 3 seconds before gate motion and remains energized during gate motion. For an additional audible or visual display, connect an external buzzer or light (low voltage).
Power	ON	ON	OFF	Energizes when AC power or solar power is present. There is approximately a 10-12 second delay before relay cutoff, after AC shutdown.	Energizes when on battery power. There is approximately a 10-12 second delay before relay cutoff, after AC shutdown.
Tamper	ON	OFF	ON	Energizes if gate is manually tampered with by being pushed off of close limit. For an additional audible or visual display, connect an external buzzer or light (low voltage).	
Cycle Count - Expansion Board Only	ON	ON	ON	The 1, 2, and 3 LEDs blink out the cycle count (cycle count is stored on the main control board). See “LED Relay Light Adjustments” on page 24.	Red/green light functionality, see “LED Relay Light Adjustments” on page 24.

Draft

Installation (continued)

LED RELAY LIGHT ADJUSTMENTS

RED/GREEN LIGHT FUNCTIONALITY						
Red light wired to AUX RELAY 1. Green light wired to AUX RELAY 2.						
GATE STATE	AUX RELAY 1 SWITCHES			AUX RELAY 2 SWITCHES		
	1 OFF	2 OFF	3 OFF	1 ON	2 ON	3 ON
Closed	Red light OFF*			Green light OFF		
Opening	Red light ON/Flash			Green light OFF		
Open	Red light OFF			Green light ON		
Closing	Red light ON/Flash			Green light OFF		
Defined Mid Stop	N/A			N/A		
Undefined Mid Stop	Red light ON			Green light OFF		
Timer more than 5 seconds	Red light OFF			Green light ON		
Timer less than 5 seconds	Red light ON/Flash			Green light OFF		
* For red light ON when gate is closed, set switch 1 on AUX RELAY 1 to ON						

Draft

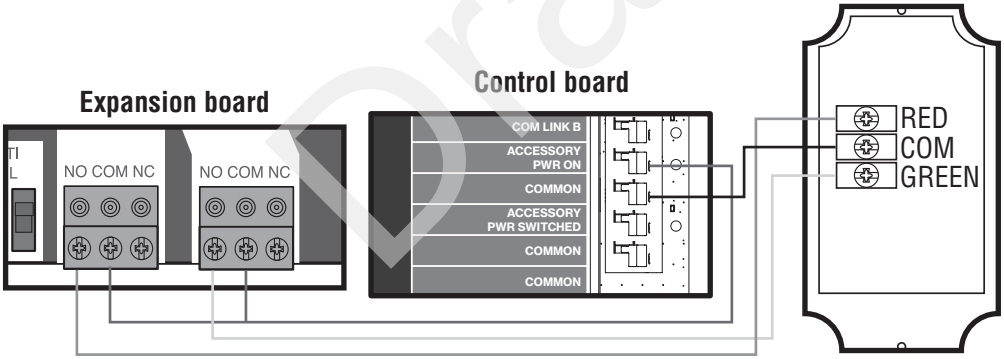

Red/green light RGL24LY

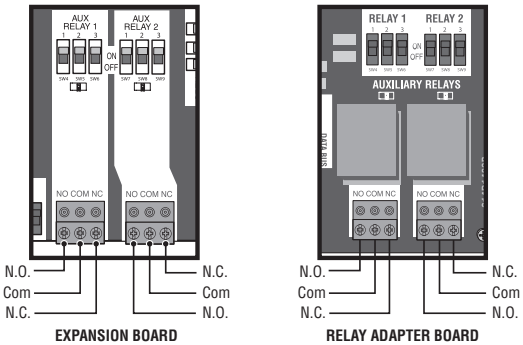

WIRING ACCESSORIES TO THE EXPANSION BOARD

Refer to the chart below and the corresponding image for a description of the expansion board inputs.

1	**Wireless edge, main control board, or relay adapter board**	Connection for wireless edge receiver, main control board, or relay adapter board. ***NOTE:*** *ONLY one wireless edge receiver may be connected to an operator. Up to 4 wireless edge transmitters LMWETXU may be programmed to the receiver.*
2	**Safety Device Inputs (4 terminals total), Open or Close Direction based on switch setting next to inputs**	EYES ONLY Input: Open or Close Direction Photoelectric Sensors, Close: reverses fully, Open: stops. EYES/EDGE Input(s): Open or Close Direction Photoelectric Sensors, Infra-red detector wired or Edge Sensor, Close: reverses fully, Open: stops.
3	**Single Button Control, SBC (2 terminals)**	Gate command sequence - Open, Stop, Close, Stop, ... Soft Open, Soft Close, Soft Stop (maintained switch does not override external safeties and does not reset alarm condition
4	**Open Input (& common) (3-Button Control Station, 4 terminals total)**	Open command - opens a closed gate. • Soft open (maintained switch does not override external safeties and does not reset alarm condition) If maintained, pauses • Timer-to-Close at OPEN limit. • Opens a closing gate and holds open an open gate
5	**Close Input (& common) (3-Button Control Station, 4 terminals total)**	• Close command - closes an open gate. • Soft close (maintained switch does not override external safeties and does not reset alarm condition).
6	**Stop Input (& common) (3-PB station, 4 terminals total)**	Stop command - stops a moving gate. • Hard stop (maintained switch overrides Open and Close commands and resets • alarm condition) If maintained, pauses • Timer-to-Close at OPEN limit. • Overrides an Open or Close command
7	**Exit Loop Input (2 terminals**	Loop wire connection for plug-in loop detector when loop is inside secured area near gate. Open command - opens a closed gate. • Soft open (maintained switch does not override external safeties and does not reset alarm condition) If maintained, pauses • Timer-to-Close at OPEN limit. • Opens a closing gate and holds open an open gate.
8	**Shadow Loop Input (2 terminals)**	Loop wire connection for plug-in loop detector when loop is positioned under the gate. • Holds open gate at open limit • Disregarded during gate motion • Pauses Timer-to-Close at Open Limit
9	**Interrupt Loop Input (2 terminals)**	Loop wire connection for plug-in loop detector when loop is along the side of the gate. • Holds open gate at open limit • Stops and reverses a closing gate • Pauses Timer-to-Close at Open Limit

Draft

Installation (continued)

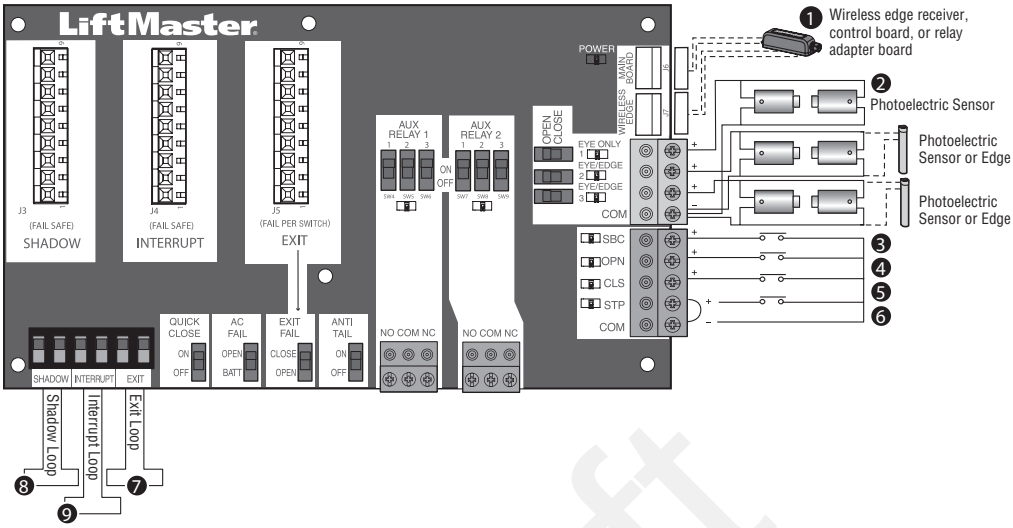

7 Earth Ground Rod

Use the proper earth ground rod for your local area. The ground wire must be a single, whole piece of wire. Never splice two wires for the ground wire. If you should cut the ground wire too short, break it, or destroy its integrity, replace it with a single wire length.

NOTE: *If the operator is not grounded properly, the range of the remote controls is reduced and the operator is more susceptible to lightning and surge damage.*

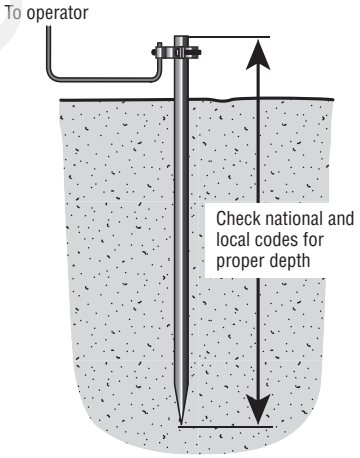

Draft

8 Power Wiring

WARNING

To reduce the risk of SEVERE INJURY or DEATH:

- ANY maintenance to the operator or in the area near the operator MUST NOT be performed until disconnecting the electrical power (AC or solar and battery) and locking-out the power via the operator power switch. Upon completion of maintenance the area MUST be cleared and secured, at that time the unit may be returned to service.
- Disconnect power at the fuse box BEFORE proceeding. Operator MUST be properly grounded and connected in accordance with national and local electrical codes.

  NOTE: *The operator should be on a separate fused line of adequate capacity.*
- ALL electrical connections MUST be made by a qualified individual. DO NOT install ANY wiring or attempt to run the operator without consulting the wiring diagram.
- ALL power wiring should be on a dedicated circuit and well protected. The location of the power disconnect should be visible and clearly labeled.
- ALL power and control wiring MUST be run in separate conduit.

The operator can be wired for either 120 VAC or 240 VAC or a solar panel (not provided). Follow the directions according to your application. An optional Transformer Kit (Model 3PHCONV) can be used to change the input voltage (208/240/480/575 VAC) to an output voltage of 120 VAC (see "Accessories" on page 57). For dual gate applications, power has to be connected to each operator. Main power supply and control wiring MUST be run in separate conduits.

PBG* & CBG* Models Maximum Wire Length (Feet)

AMERICAN WIRE GAUGE (AWG)	STANDARD OPERATOR			3PHCONV kit powering operator + heater + 1 Amp on outlets			
	120 VAC, 12.5 A (includes fully loaded outlets)	120 VAC, 6.5 A	240 VAC, 1.8 A	208 VAC, 4.8 A	240 VAC, 4.2 A	480 VAC, 2.1 A	575 VAC, 1.7 A
14	80	150	530	360	470	1,900	2,800
12	130	240	840	570	750	3,000	4,500
10	200	390	1,300	910	1,200	4,800	7,100
8	320	620	3,100	1,400	1,900	7,600	11,000
6	510	980	3,400	2,300	3,000	12,000	18,000
4	810	1,600	5,400	3,700	4,800	19,000	28,500

Chart assumes: copper wire, 65°C, 5% drop

IBG* Models Maximum Wire Length (Feet)

AMERICAN WIRE GAUGE (AWG)	STANDARD OPERATOR			3PHCONV kit powering operator + heater + 1 Amp on outlets			
	120 VAC, 13 A (includes fully loaded outlets)	120 VAC, 7 A	240 VAC, 3.5 A	208 VAC, 5.2 A	240 VAC, 4.5 A	480 VAC, 2.3 A	575 VAC, 1.9 A
14							
12							
10							
8							
6							
4							

Chart assumes: copper wire, 65°C, 5% drop

Draft

Installation (continued)

All control wiring used to connect external devices to Class 2 circuits of the operator must be (QPTZ) Power-Limited Circuit Cables, Type CL2, CL2P, CL2R, or CL2X or other cable with equivalent or better electrical, mechanical, and flammability ratings.

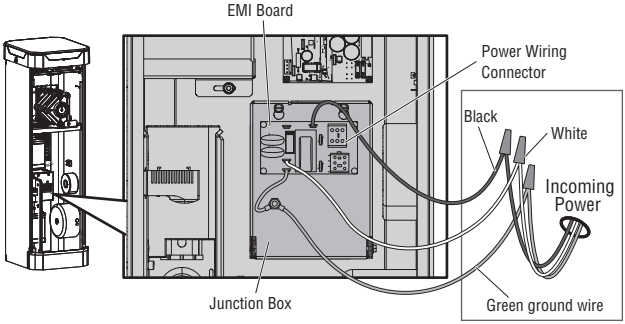

1. Turn off the AC power from the main power source circuit breaker.
2. Run the AC power wires to the operator.
3. Make sure the operator AC switch is in the OFF position. See "AC Power Switch" on page 29.
4. Open the junction box cover by loosening the top two screws and rotating the cover down.
5. **120 VAC:** Factory default is 120 VAC. Skip to 6.
   240 VAC: Unplug the power wiring connector from the 120 VAC socket (factory default location) and plug it into the 240 VAC socket. ***NOTE:*** *The accessory outlets are disabled and cannot be used with the 240 VAC option.*

   208/240/480/575 VAC*: See instructions for the Optional Transformer Kit Model 3PHCONV.*
6. Connect the green ground wire to the incoming earth ground using a wire nut.
7. Connect the white wire to NEUTRAL using a wire nut.
8. Connect the black wire to HOT using a wire nut.
9. Replace the junction box cover. Ensure the wires are not pinched.
10. Turn on the AC power from the main power source circuit breaker.

Draft