TAOGLAS®

Datasheet

2.4GHz 5dBi Terminal Mount Dipole Antenna

Part No:
GW.34.5153

Description:

Wi-Fi 2.4GHz 5dBi Dipole Terminal Mount Antenna RP-SMA(M) Hinged

Features:

2.4GHz Band Operation

5dBi Gain

High Efficiency up to 80%

Hinged RP-SMA (M) Connector

Height: 198mm

Diameter: 13mm

RoHS & Reach Compliant

1.	Introduction	3
2.	Specifications	4
3.	Antenna Characteristics	6
4.	Radiation Patterns	8
5.	Mechanical Drawing	11
6.	Packaging	12
	Changelog	13

Taoglas makes no warranties based on the accuracy or completeness of the contents of this document and reserves the right to make changes to specifications and product descriptions at any time without notice. Taoglas reserves all rights to this document and the information contained herein. Reproduction, use or disclosure to third parties without express permission is strictly prohibited.

Ireland ISO 9001: 2015 Certified

Taiwan ISO 9001: 2015 Certified

1. Introduction

The Taoglas GW.34 is a 2.4 & 5.8GHz Wi-Fi terminal mount dipole antenna. At just 198mm in height and 13mm in diameter, the robust TPEE enclosure can be mounted straight or at right angle to the device with its hinged RP-SMA(M) connector. It is ideal for applications such as Bluetooth, BLE, ZigBee and Wireless LAN. The GW.82, designed for superior performance and reliability, has an omnidirectional radiation pattern and extremely high efficiency and gain on both the 2.4 & 5.8GHz bands.

Typical applications include:

- Smart Home - Gateways/Routers - Connected Agriculture

The GW.34 has up to 5dBi Peak making it a cost-effective, high-performing choice for any indoor or outdoor application. Many module manufacturers specify peak gain limits for any antennas that are to be connected to that module. Those peak gain limits are based on free-space conditions. In practice, the peak gain of an antenna tested in free-space can degrade by at least 1 or 2dBi when installed. So ideally you should go for a slightly higher peak gain antenna than mentioned on the module specification to compensate for this effect. This provides you with improved performance. Upon testing of any of our antennas with your device and appropriate layout, integration technique, or cable, we can work with you to make any of our antennas' perform below the peak gain limits. Taoglas can then issue a specification and/or report for the selected antenna in your device that will clearly show it complying with the peak gain limits. You can be assured that you are meeting the regulatory requirements for that module whilst getting the best performance possible, without exceeding the peak gain limits.

For further information, or support to test and integrate this product please contact your regional Taoglas customer support team.

2. Specifications

Electrical	
Frequency (MHz)	**2400~2500**
Efficiency (%)	
Straight	78.56
Bent	83.20
Average Gain (dB)	
Straight	-1.05
Bent	-0.80
Peak Gain (dBi)	
Straight	4.22
Bent	5.89
Impedance	50Ω
Polarization	Linear
Radiation Pattern	Omni
Max. input power	1W
Mechanical	
Height	198 ±3.3 mm
Planner Dimension	198*Ø13 mm
Casing	TPEE
Connector	RP-SMA(M)
Weight	22.5 g
Environmental	
Temperature Range	-40°C to 85°C
Humidity	Non-condensing 65°C 95% RH

3. Antenna Characteristics

3.1 Return Loss

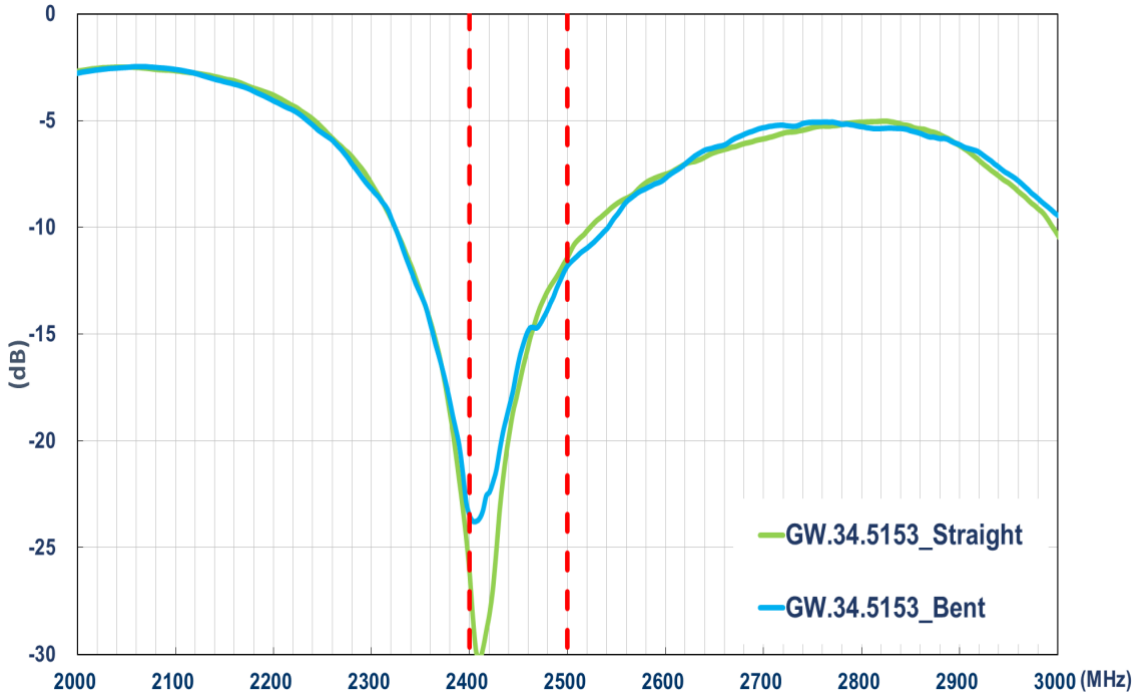

3.2 Efficiency

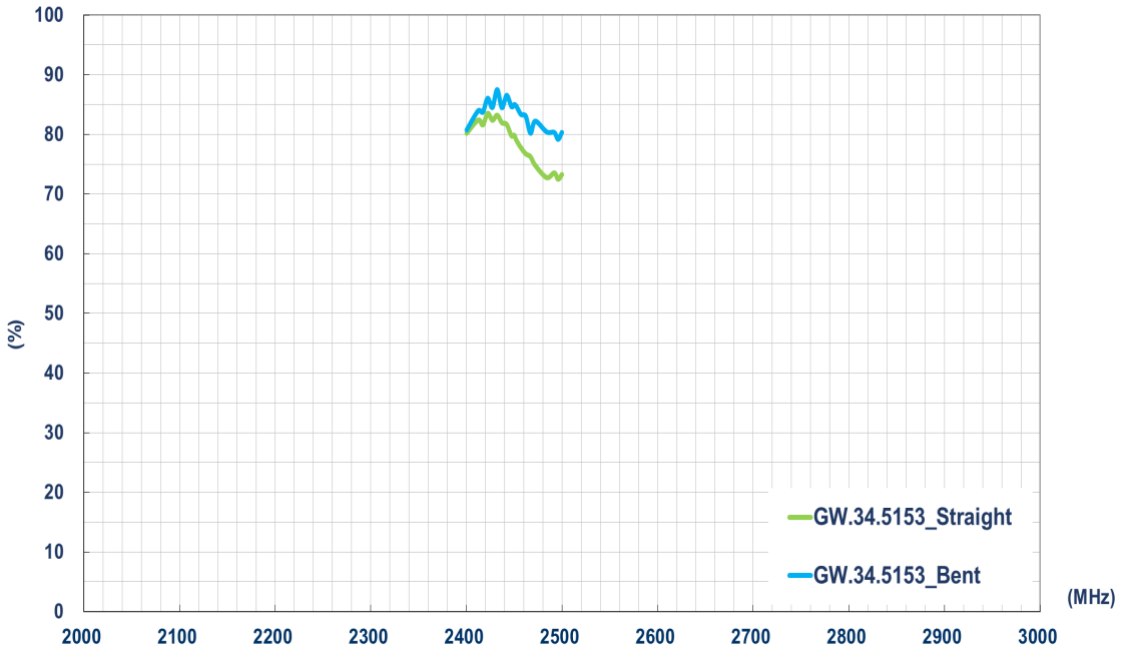

3.3 Average Gain

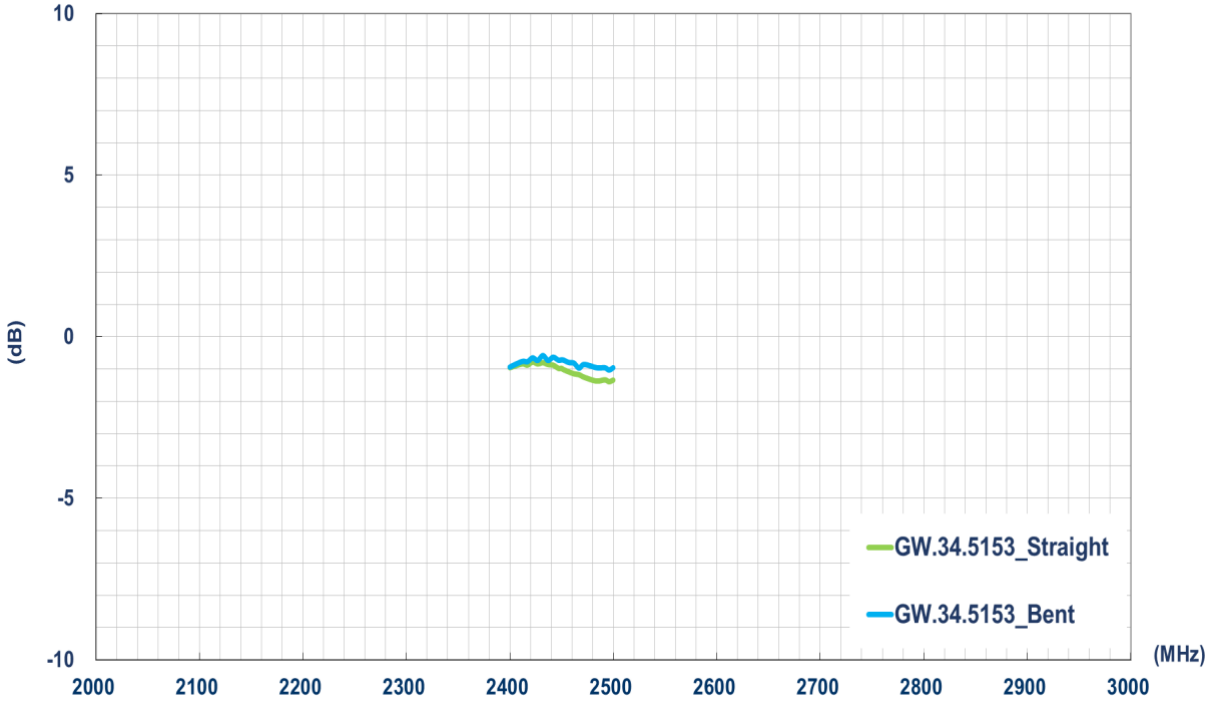

3.4 Peak Gain

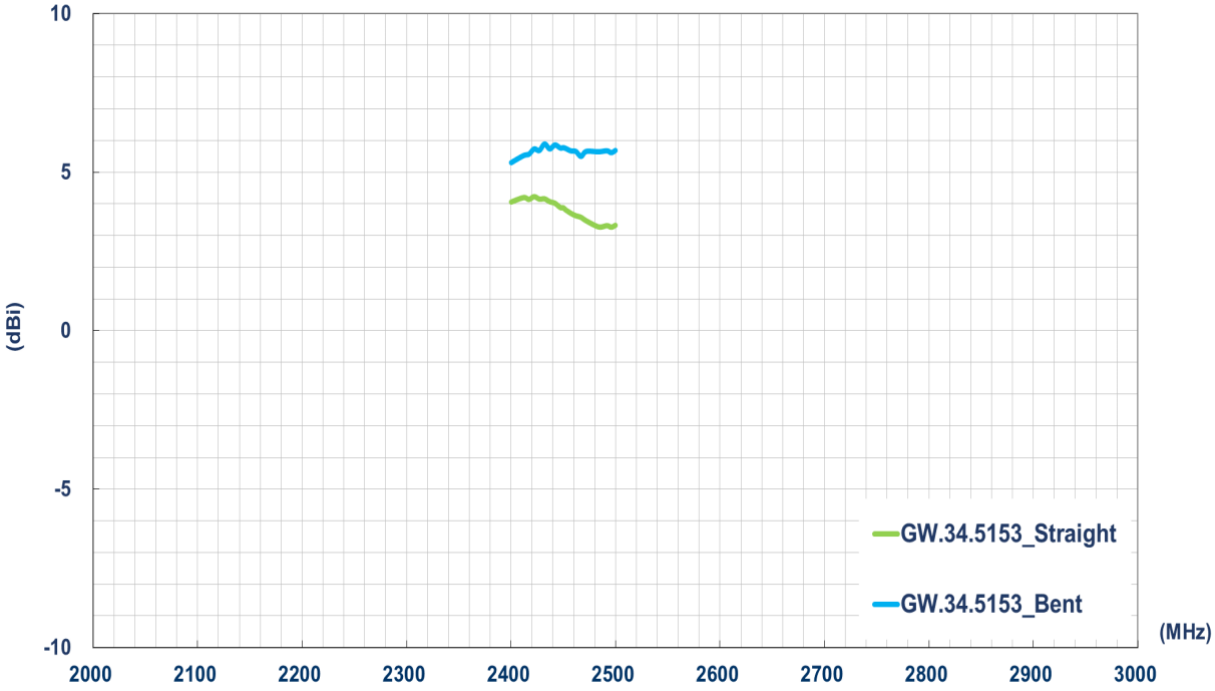

4. Radiation Patterns

4.1 Test Setup

Free space - Straight

Free space - Bent

4.2 2450MHz 3D and 2D Radiation Patterns - Straight

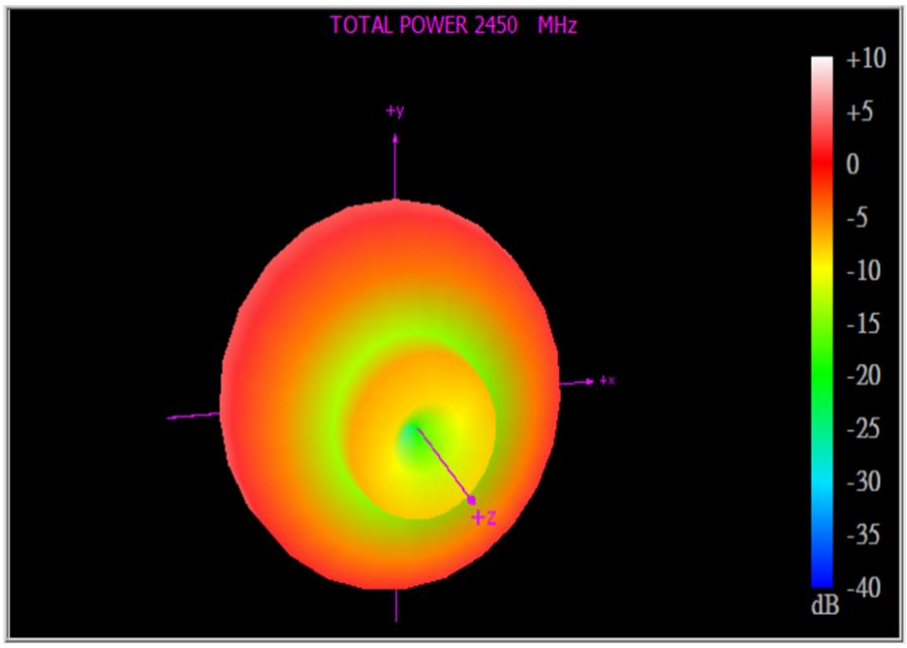

XY Plane	XZ Plane	YZ Plane

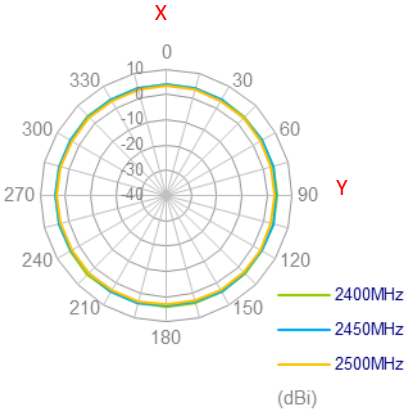

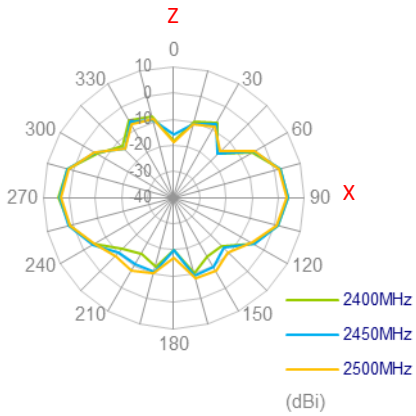

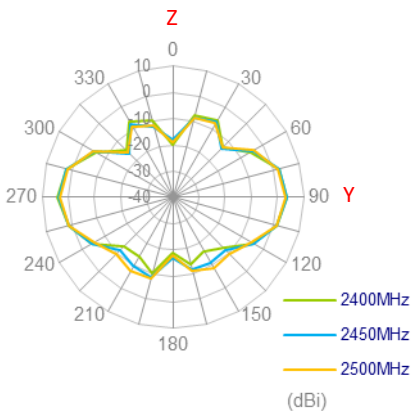

4.3 2450MHz 3D and 2D Radiation Patterns - Bent

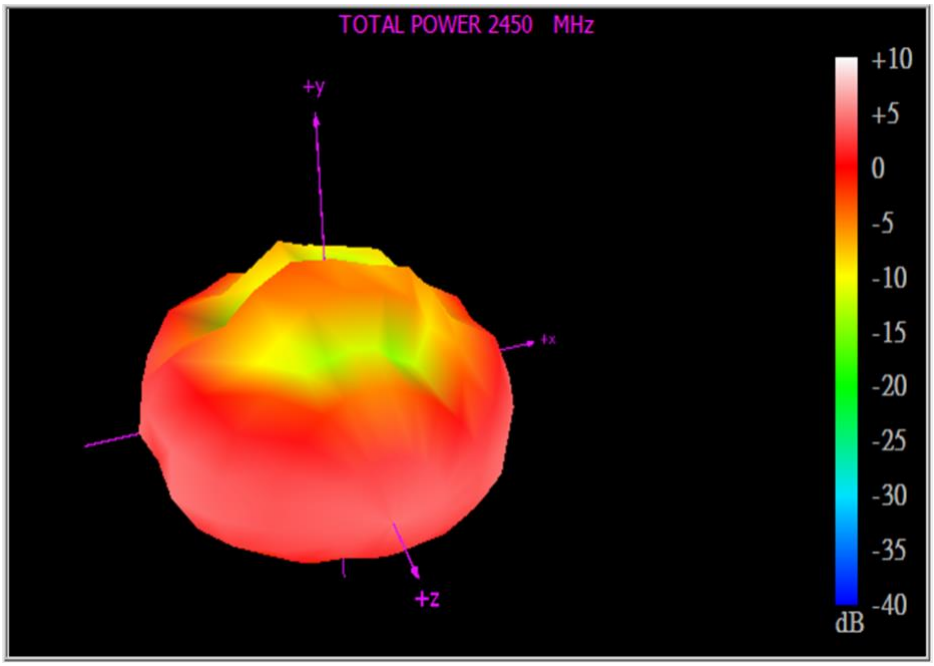

XY Plane	XZ Plane	YZ Plane

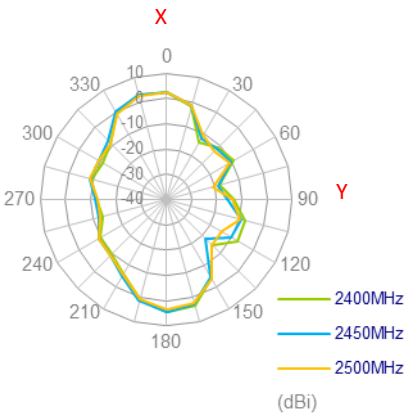

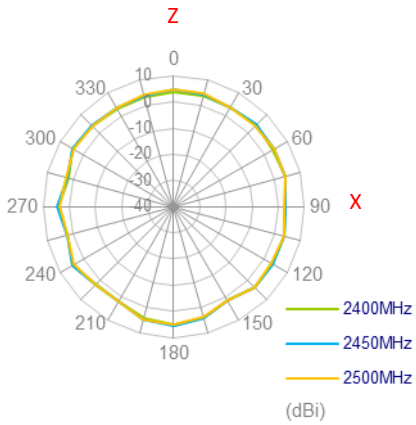

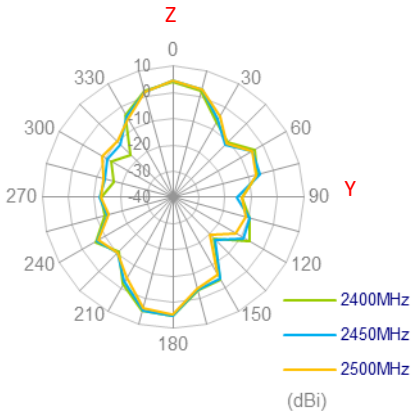

5. Mechanical Drawing (Units: mm)

ISO NO: EDW-19-8-0592

<Release>

REV	ZONE	DESCRIPTION	ENG	APPROVED	ISSUED DATE
D01	ALL	Initial Design	Rachel	Sky	2019/05/09

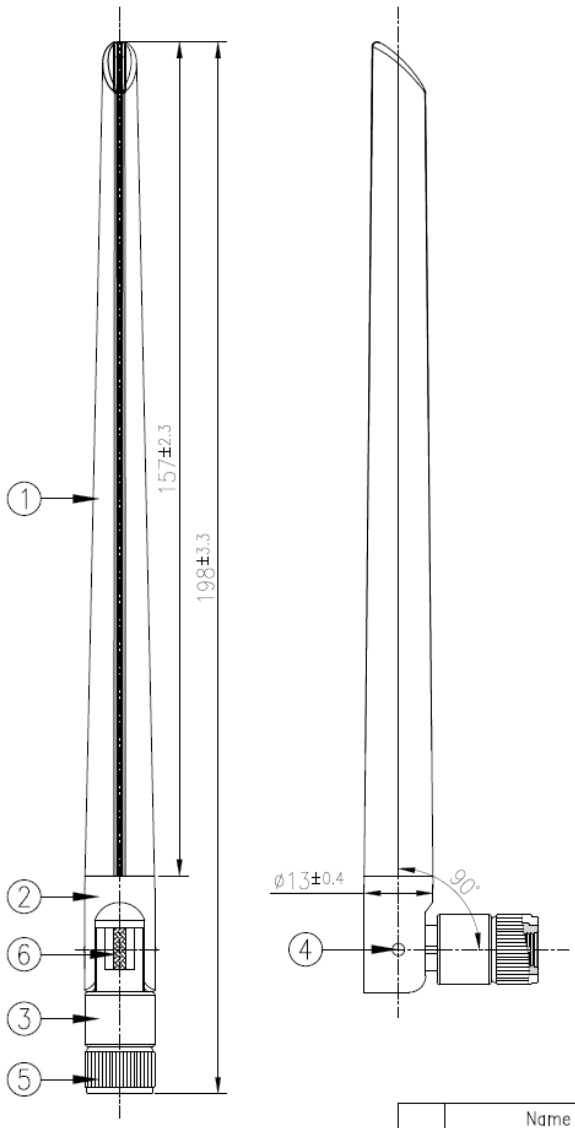

	Name	P/N	Material	Finish	QTY
1	Antenna Cap	000118H120000A	TPEE	Black	1
2	Upper Base	001719E000000A	PBT+PC	Black	1
3	Bottem Base	001719E000000A	PBT+PC	Black	1
4	Rivet	001719E000000A	PBT+PC	Black	2
5	RP-SMA(M)	001719E000000A	Brass	Au Plated	1
6	RG178 Coaxial Cable	001719E000000A	FEP	Brown	1

UNLESS OTHERWISE SPECFIED TOLERANCES ON:
.X± 0.2
XX.± 0.5 .XX± 0.1
X.± 0.3 .XXX± 0.05

DATE: 2019/05/09 | MAT'L:
UNIT: mm | FINISH:
THIRD ANGLE PROJECTION | SCALE: 1/1.25

APPROVED BY: Sky | CHECKED BY: Barry | DRAWN BY: Rachel | CUSTOMERS SIGNATURE / DATE

TAOGLAS. TW Design Centre
This drawing and its inherent design concepts are property of Taoglas. Not to be copied or given to third parties without the written consent of Taoglas.

REV D01

TITLE. : 5dBi 2.4GHz Dipole Antenna RP-SMA(M) Hinged

PART NO. : GW.34.5153

6. Packaging

1pc GW.34.5153 per PE Bag
Bag Dimension: 245*30mm
Weight: 22.5g

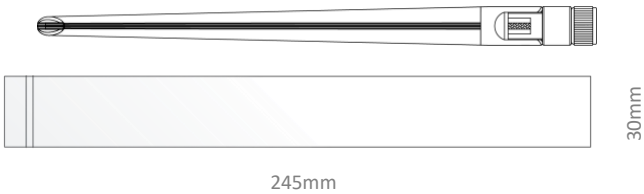

40pcs GW.34.5153 per Large PE Bag
Bag Dimensions: 320*205mm
Weight: 0.9Kg

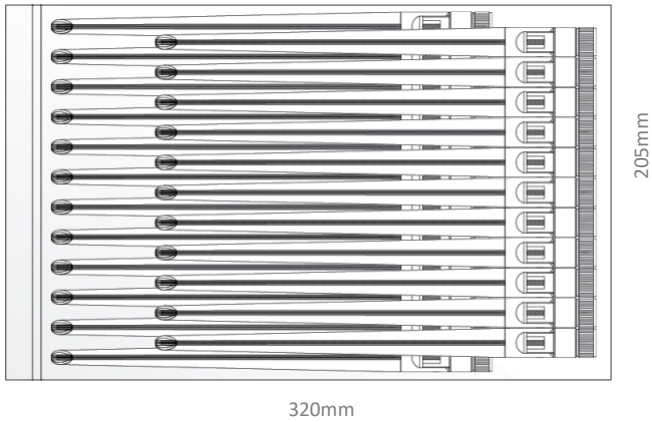

400pcs GW.34.5153 per Carton
Dimensions: 320*250*230mm
Weight: 10Kg

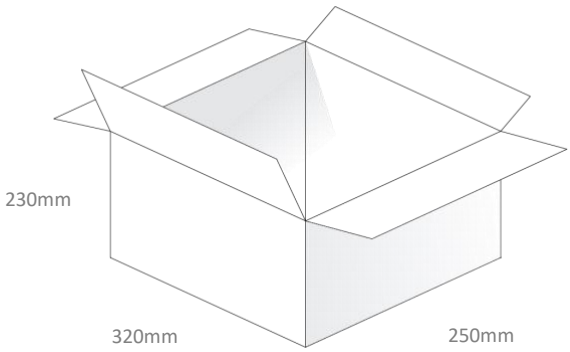

Pallet Dimensions:
1200*1000*1350mm
60 Cartons Per Pallet
12 Cartons Per Layer, 5 Layers

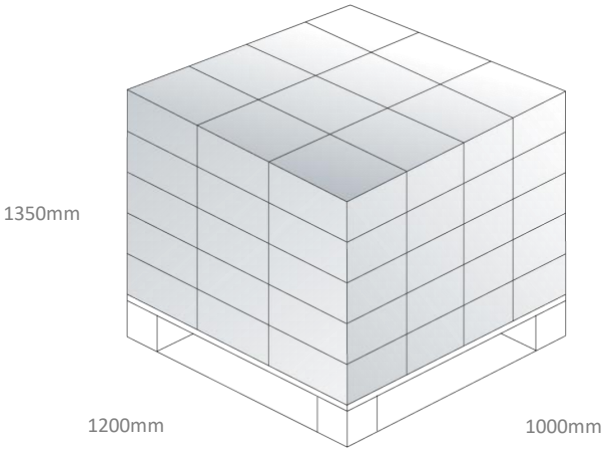

Changelog for the datasheet

SPE-17-8-042 - OMB.868.B12F21

Revision: A (Original First Release)	
Date:	2019-06-24
Notes:	
Author:	Jack Conroy

Previous Revisions

TAOGLAS®

www.taoglas.com

© Taoglas