MULTI-FUNCTION CONTROL PANEL

MODELS: L955W, 003-0859-000, & 041-0491-000

Product Manual

Overview

Your Multi-Function Control Panel is compatible with Security+ 3.0™ garage door openers. All Security+ 3.0 garage door openers have a white learn button. The images throughout this manual are for reference only and your product may look different.

⚠ WARNING

To prevent possible SERIOUS INJURY or DEATH from electrocution:

- Be sure power is NOT connected BEFORE installing door control.
- Connect ONLY to 12 VOLT low voltage wires.

To prevent possible SERIOUS INJURY or DEATH from a closing garage door:

- Install door control within sight of garage door, out of reach of children at a minimum height of 5 feet (1.5 m), and away from ALL moving parts of door.
- NEVER permit children to operate or play with door control push buttons or remote control transmitters.
- Activate door ONLY when it can be seen clearly, is properly adjusted, and there are no obstructions to door travel.
- ALWAYS keep garage door in sight until completely closed. NEVER permit anyone to cross path of closing garage door.
- Unattended devices and features are to be used ONLY with sectional doors.

WARNING: This product can expose you to chemicals including lead, which are known to the State of California to cause cancer or birth defects or other reproductive harm. For more information go to www.P65Warnings.ca.gov.

Contents

Overview 2

Installation 3

- Tools Required 3
- Hardware Included 3
- Wire the Control Panel 3
- Mount the Control Panel 4
- Wire to Garage Door Opener 5

Programming the Control Panel to Your Garage Door Opener 6

Features and Operation 7

Program a Remote Control or Wireless Keypad to Your Garage Door Opener 8

Additional Resources 9

Installation

Install the control panel within sight of the garage door at a minimum height of 5 feet (1.5m) where small children cannot reach, and away from moving parts of the door.

Tools Required

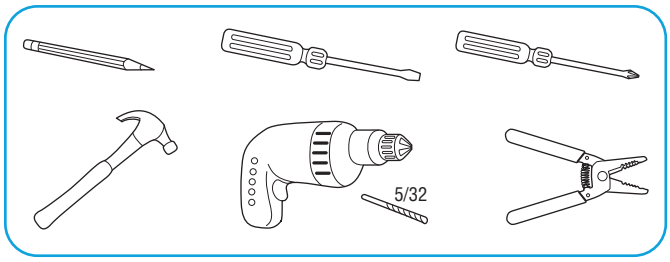

Hardware Included

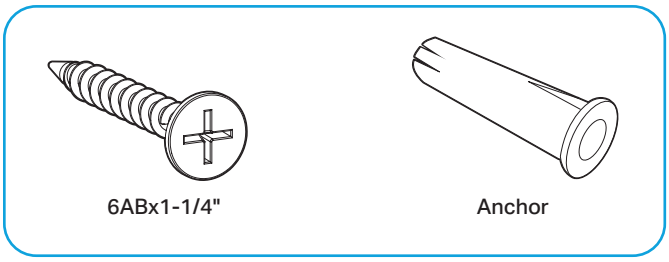

Wire the Control Panel

01 Unplug the garage door opener to prevent the garage door opener from activating during wiring. Disconnect the garage door opener battery (if applicable).

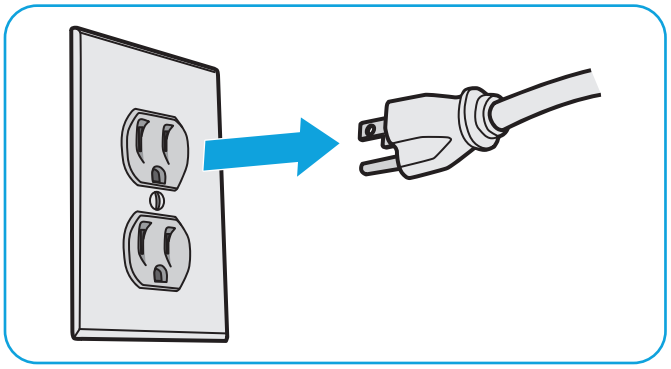

02 Separate the wires and strip 7/16 inch (11 mm) of insulation from the end of each wire.

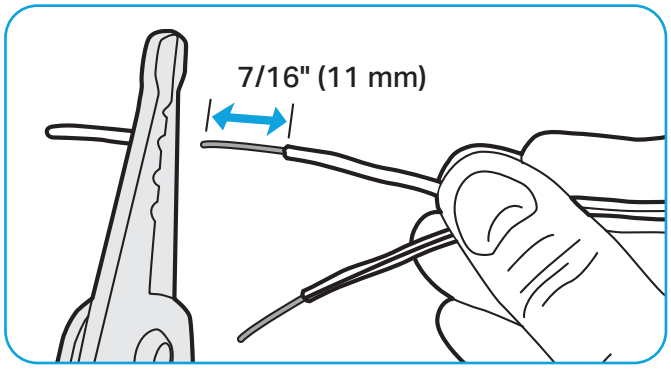

03 Connect one wire to each of the two screws on the back of the door control. The wires can be connected to either screw.

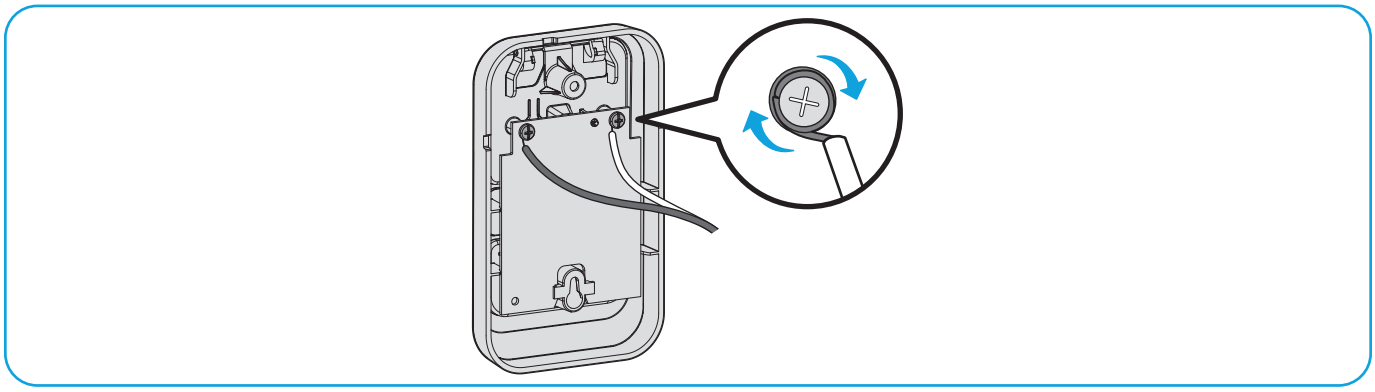

Installation (continued)

Mount the Control Panel

01 Mark the location of the bottom mounting hole and drill a 5/32 inch (4 mm) hole.

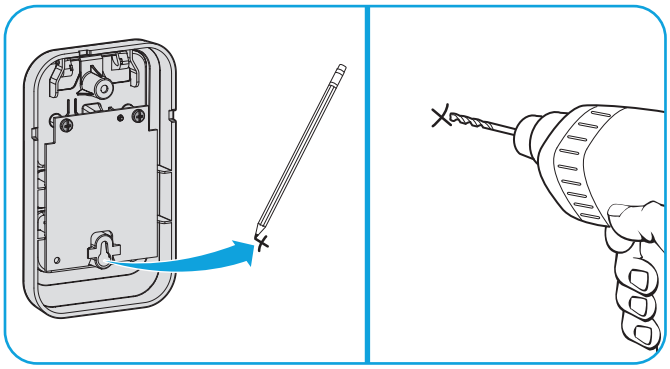

02 Tap in anchor with hammer if installing on drywall. Install the bottom screw, allowing 1/8 inch (3 mm) to protrude from the wall.

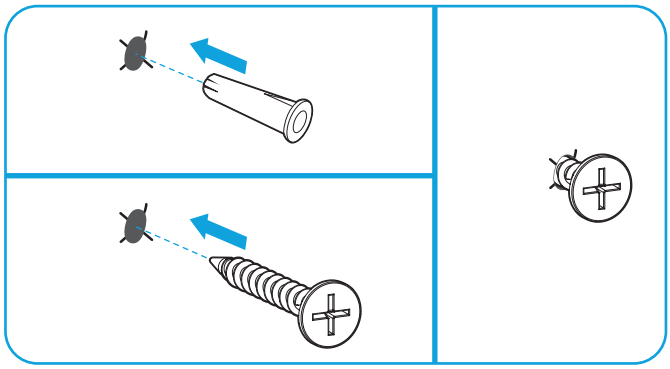

03 Position the bottom hole of the control panel over the screw (a) and slide down into place (b).

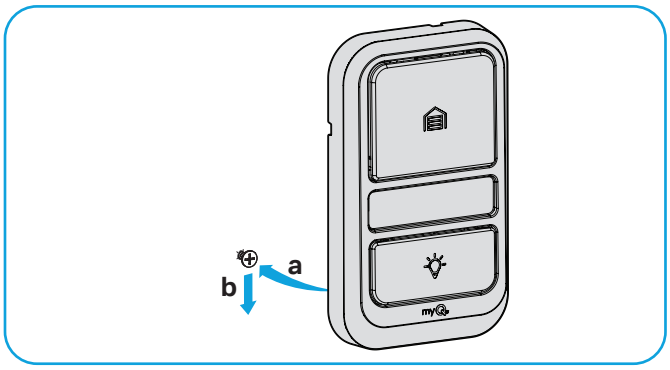

04 Lift up the control panel push bar and mark the top hole.

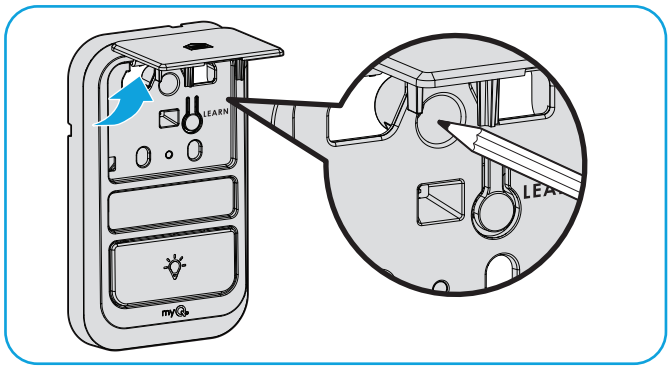

05 Remove the control panel from the wall and drill a 5/32 inch (4 mm) hole for the top screw. Tap in anchor with hammer if installing on drywall.

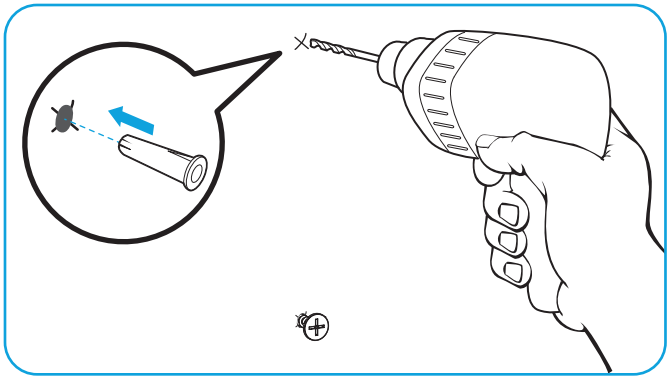

06 Position the bottom hole of the control panel over the screw and slide down into place. Install the top screw and close the push bar.

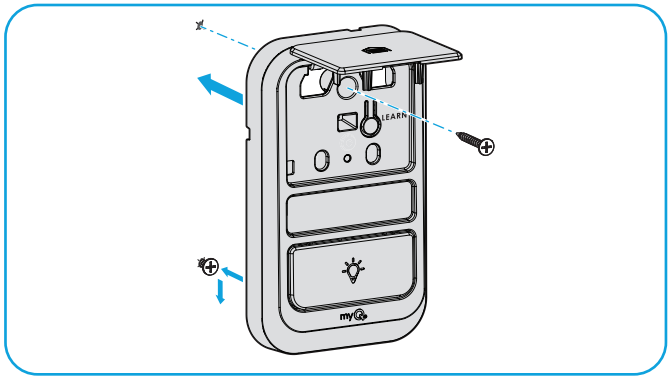

Installation (continued)

Wire to Garage Door Opener

01 Separate the wires and strip 7/16 inch (11 mm) of insulation from the end of each wire.

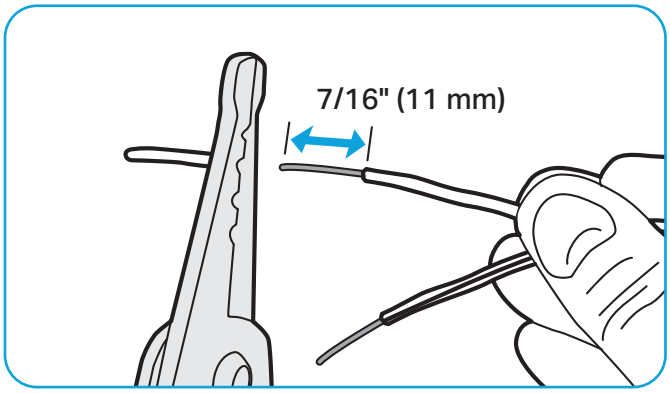

02 Connect one of the wires to the red terminal and the other wire to the white terminal. To insert or release wire, push in tab with screwdriver tip.

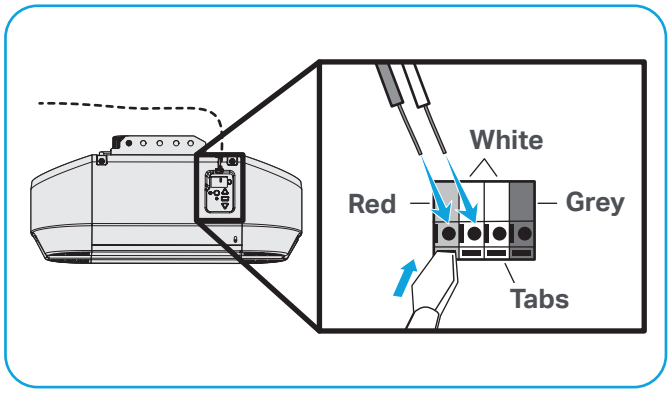

03 Reconnect power to the garage door opener.

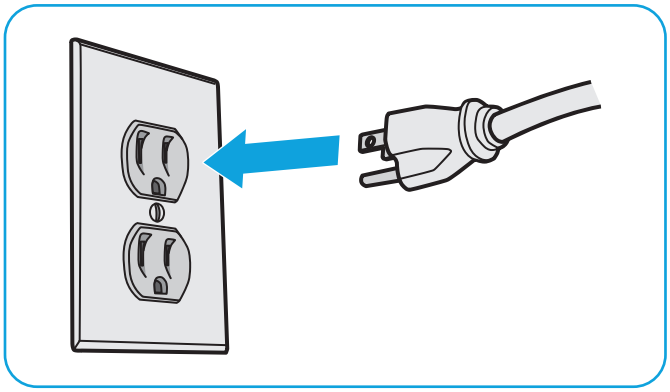

04 The command LED will flash until the control panel has been programmed to the garage door opener. See page 6 for programming instructions.

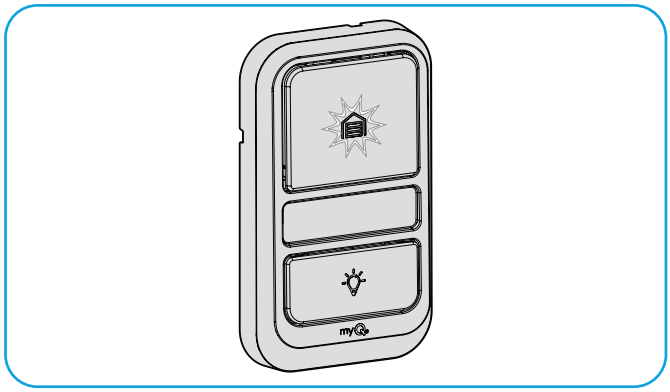

If the control panel command LED does not light up, first, verify the wires to both the control panel and garage door opener are installed properly. Having done so, if the control panel command LED does not light up, check for breaks or a short in the wires. If either are found, replace the wire.

Programming the Control Panel to Your Garage Door Opener

01 Locate the LEARN button on your garage door opener (a ladder may be required). Press and **immediately** release the LEARN button. The LEARN button LED will turn on solid.

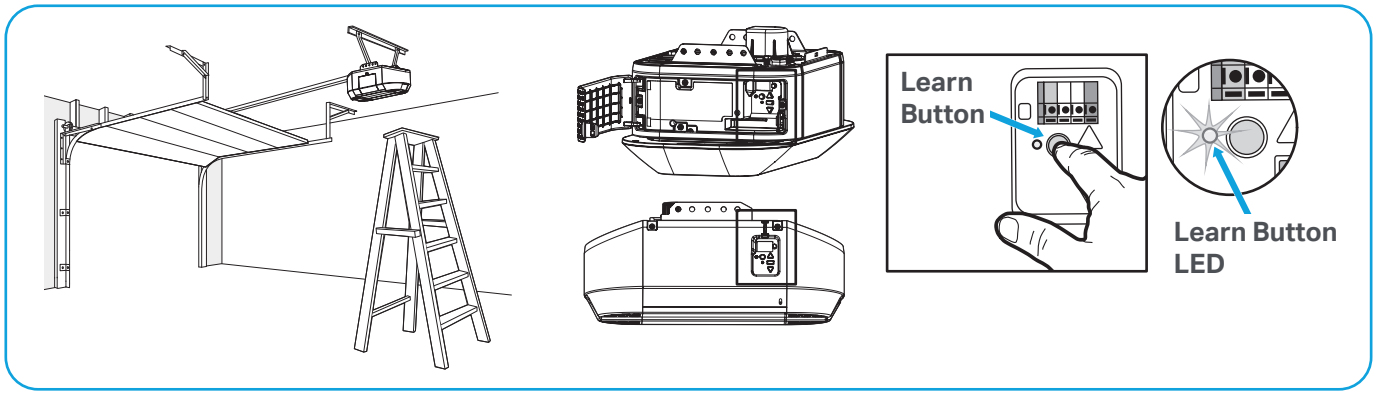

02 Within 30 seconds, press and hold the control panel push bar until the garage door opener lights flash **and/or** two clicks are heard.

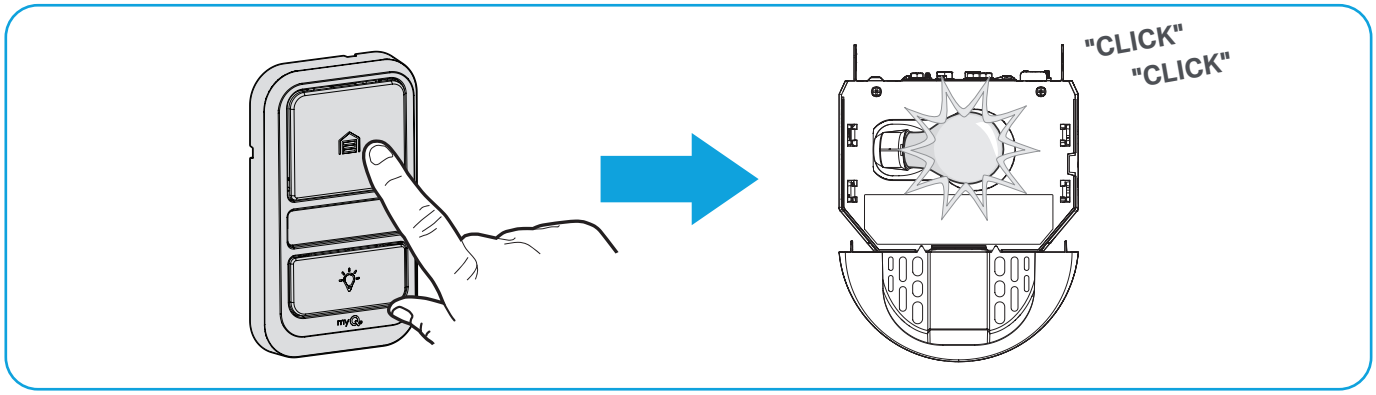

TEST FOR SUCCESS: Press the control panel push bar. The garage door opener will activate. If the garage door does not activate, repeat the programming steps.

Features and Operation

Features

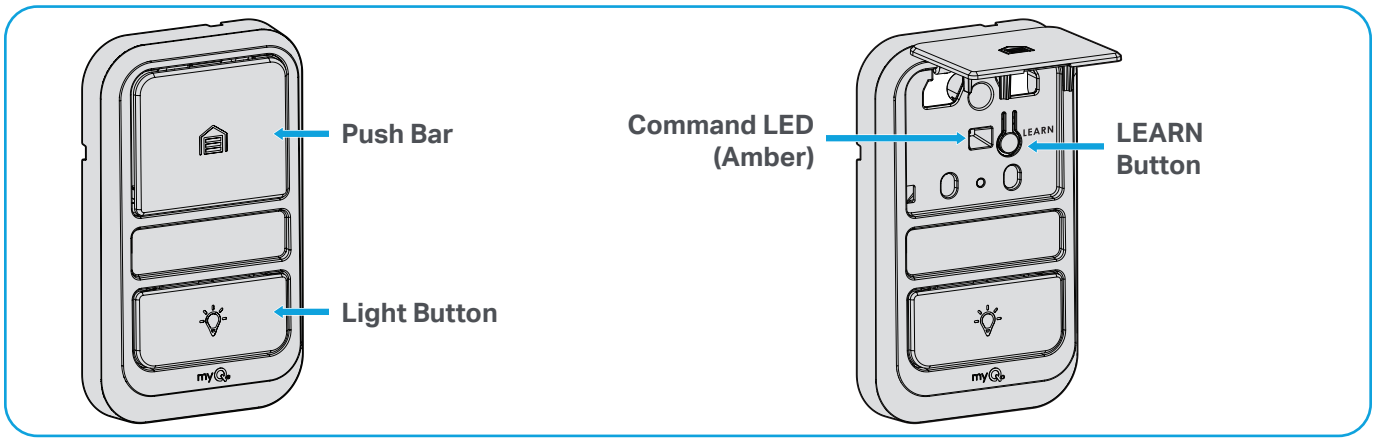

Operation

Push Bar

Press push bar to open / close the garage door.

Light Button

Press the light button to turn the garage door opener lights on or off. When the lights are turned on they will stay on until the light button is pressed again, or until the garage door opener is activated. Once the garage door opener is activated the lights will turn off after a specified period of time (the factory setting is 4 1/2 minutes). The light button will not control the lights when the door is in motion.

NOTE: Connect your garage door opener to the myQ app to manage the length of time the light stays on.

Light Feature for the Safety Reversing Sensors

The garage door opener lights will turn on when the safety reversing sensor beam is interrupted. Factory default is ON.

Turn ON: Start with the garage door opener lights on. Press and hold the light button to turn off the light, continue to hold until the light turns on (about 10 seconds).

Turn OFF: Start with the garage door opener lights off. Press and hold the light button to turn on the light, continue to hold until the light turns off (about 10 seconds).

Program a Remote Control or Wireless Keypad to Your Garage Door Opener

01 Lift the push bar. Press the LEARN button **twice** (after the second press, the LED on the door control panel will pulse repeatedly).

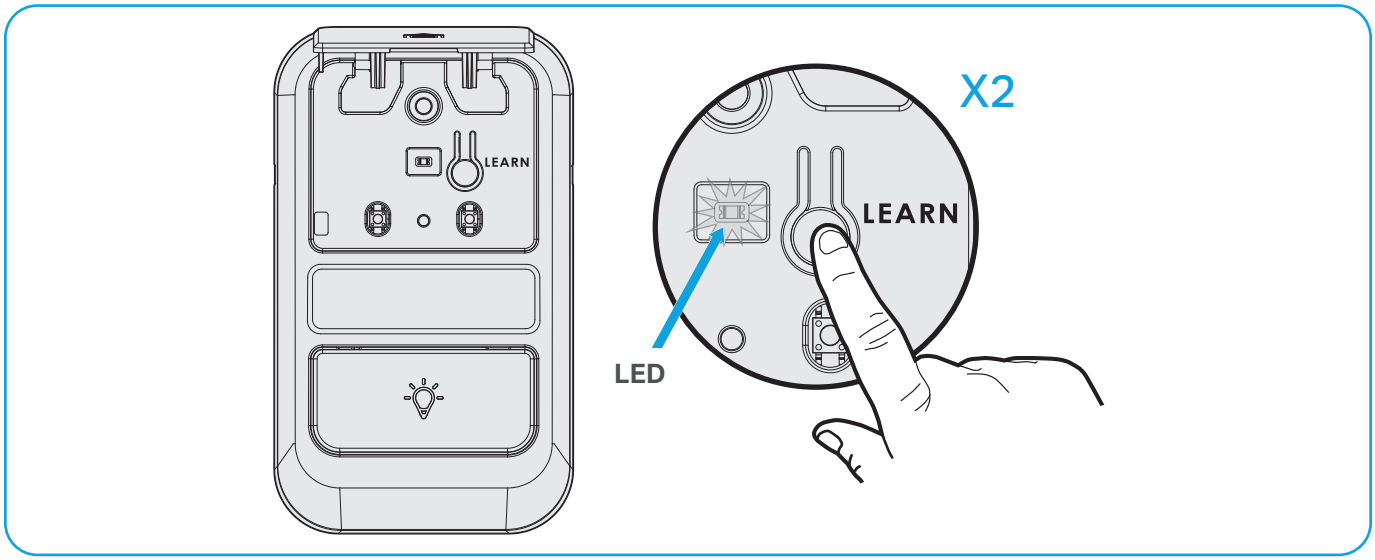

02a Within 30 seconds, press and hold the button on the remote control that you wish to use. Release the button when the garage door opener lights flash **and/or** two clicks are heard.

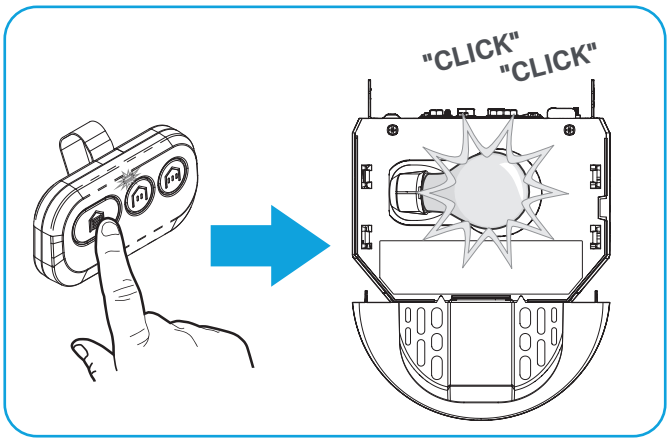

TEST FOR SUCCESS: Press the remote button you programmed. The garage door opener will activate. If the garage door does not activate, repeat the programming steps.

02b Within 30 seconds, enter a 4-8 digit personal identification number (PIN) of your choice. Press and hold the HOME button until the garage door opener lights flash **and/or** two clicks are heard.

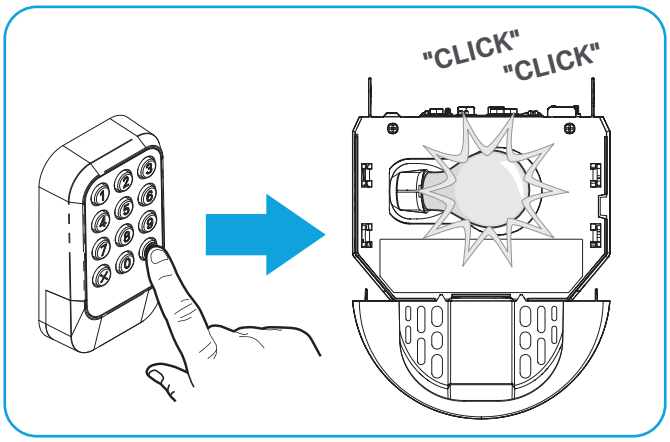

TEST FOR SUCCESS: With the garage door closed, enter the PIN you programmed and press the HOME button. The garage door opener will open the door. If the garage door does not open, repeat the programming steps.

Additional Resources

One Year Limited Warranty

The Chamberlain Group LLC ("Seller") warrants to the first consumer purchaser of this product that it is free from defect in materials and/or worksmanship for a period of 1 year from the date of purchase.

For more information, visit www.myq.com/warranty

Contact Us

For additional information or assistance, please visit: support.chamberlaingroup.com

NOTICE: This device complies with part 15 of the FCC rules and Innovation, Science and Economic Development Canada license-exempt RSSs. Operation is subject to the following two conditions: (1) this device may not cause harmful interference, and (2) this device must accept any interference received, including interference that may cause undesired operation. Any changes or modifications not expressly approved by the party responsible for compliance could void the user's authority to operate the equipment. This device must be installed to ensure a minimum 20 cm (8 in.) distance is maintained between users/ bystanders and device. This device has been tested and found to comply with the limits for a Class B digital device, pursuant to part 15 of the FCC rules and Industry Canada ICES standard. These limits are designed to provide reasonable protection against harmful interference in a residential installation. This equipment generates, uses and can radiate radio frequency energy and, if not installed and used in accordance with the instructions, may cause harmful interference to radio communications. However, there is no guarantee that interference will not occur in a particular installation. If this equipment does cause harmful interference to radio or television reception, which can be determined by turning the equipment off and on, the user is encouraged to try to correct the interference by one or more of the following measures:

- Reorient or relocate the receiving antenna.
- Increase the separation between the equipment and receiver.
- Connect the equipment into an outlet on a circuit different from that to which the receiver is connected.
- Consult the dealer or an experienced radio/TV technician for help.

This Class B digital apparatus complies with Canadian ICES-003.

Cet appareil numérique de la classe B est conforme à la norme NMB-003 du Canada.

©2025 The Chamberlain Group LLC

myQ and the myQ logo are trademarks, service marks, and/or registered trademarks of The Chamberlain Group LLC. All other trademarks, service marks and product names used herein are the property of their respective owners.

The Chamberlain Group LLC. 300 Windsor Drive, Oak Brook, IL, 60523, United States

See chamberlain.com/patents

114-6087-000