NOTES:

1. MATERIAL: G.E. CYCOLOY (POLYCARBONATE & ABS) GRADE 1200, SYMBOL >PC+ABS<.)
2. COLOR: SEE TABLE
3. SEE CHAMBERLAIN STANDARD PRODUCT SPEC. 190A0280 FOR GENERAL TOOLING AND PROCESSING. SECTIONS 1.2 AND 1.3 DO NOT APPLY. REFER TO DATABASE.
4. ANGULAR DIMENSIONS ARE ±1° UNLESS SPECIFIED ON THIS DRAWING.
5. CRITICAL DIMENSIONS ARE MARKED WITH AN ASTERISK (*).
6. PART NO., MATERIAL I.D., ISSUE LETTER TO BE MOLDED IN 1/32 TO 1/8 INCH HIGH CHARACTERS RAISED .010 INCH ABOVE THE SURFACE. VERSION NO. AND DATE CODE (MONTH AND YEAR) TO BE MOLDED IN LOCATIONS AS SHOWN. LETTERS MUST BE LEGIBLE.
7. TEXTURE EXTERIOR SURFACES PER MOLD-TECH MT-11030 EXCEPT WHERE INDICATED OTHERWISE.
8. SURFACES WITH NO SPECIFIED FINISH TO BE IN THE RANGE OF SPI-SPE NO.2 - NO.3.
9. GATE VESTIGE TO BE +.035 MAX. OR BELOW SURFACE.
10. REMOVE THE CANADA I.D. BLOCK FOR PART NO. 093D0207-4 & NO. 093D0207-5.
11. PART NUMBER AND PRODUCT LINE CHART IS LOCATED ON SHEET 2 OF 2.

PART NUMBER: 093D0207 THRU -6			SHEET 1 OF 2	K
ECN/DATE	BY	APP	REVISION	REV
C-101 20MAY97	MF		TOOLING RELEASE	A
L-227 20OCT97	MF		MATERIAL: CYCOLOY 1200 WAS POLYPROPYLENE RPP250208; GATE VESTIGE, .020 MAX. WAS .005 MAX.;TABLE: ADDED PRODUCT LINE AND HOUSING COLUMNS, CHAMBERLAIN AND MASTER MECHANIC ROWS; ADDED FCC, CANADA, MODEL NO. LOCATIONS; ADDED "ASSEMBLED IN MEXICO" LOC. F2; ADDED .069 loc.H3; ADDED TOLERANCES TO 2.021 loc.E5; ADDED (2 PL) TO .549 LOC. D6 and 1.349 LOC. E7; .202 WAS .20 LOC. F7; ADDED (2 PL) TO .15 LOC. D8; 1.355 +/-.010 (2PL) WAS 1.35 loc.E7; ADDED .069 LOC. H8; ADDED TOLERANCES TO .087 LOC. C10; 1.811 WAS 1.821 LOC. E12; ADDED .065 LOC G13; ADDED DETAIL K AND L; ADDED TOLERANCES TO .015 LOC. H2; REVISED ANGLE TOLERANCE 1 DEG WAS 1/2 LOC. H3; SNAP LENGTH .020 WAS .015 LOC.J3; ADDED TOLERANCES TO 1.405, 1.251,1.216,1.107 LOC. J9; REVISED TOLERANCE TO .055 LOC. J8; ADDED (8 PL) LOC. J11; TOLERANCE 2 deg. WAS 1 DEG. LOC. H12; ADDED .065 LOC G13	B
M-213 12NOV98	MF		NOTE 6: "RECYCLING I.D." REMOVED; NOTE 9: .035 WAS .020; LOC. W2: .080 +.005/-.006 WAS .069±.003, 15° ± 2° WAS 15° ±1°. MADE .030 CRITICAL AND ADDED TOL.S.; LOC J3: .021 +.004/-.002 WAS .020 ±.003; LOC. F5: 2.021+.005/-.006 WAS +.005/-.008; LOC. H9: .069 +.003/-.009 WAS ±.003 & 1.251 +.005/-.006 WAS +.005/-.010, 1.216 +.005/-.008 WAS +.005/-.010; LOC. J10: 1.107 +.008/-.006 WAS +.008/-.007; LOC. D9: ADDED .258 & .129; LOC. B13: .070 +.005/-.002 WAS ±.003; LOC. H13: 2° +2°/-1° WAS ±1°. LOC. H12: 30° ±3° WAS ±2°; LOC. J14: .070 +.005/-.002 WAS ±.003; LOC. G13: .075 WAS .065; LOC. D7: .549 +.005/-.008 WAS .549; LOC. E6: 1.349 +.005/-.008 WAS 1.349; LOC. F6: .195 +.011/-.000 WAS .202; LOC. H9: ADDED .012; LOC. D10: .087 +.005/-.007 WAS .087 +.007/-.005; LOC. E11: ADDED TOL. TO 17. ADDED DETAIL M; LOC. G12: ADDED .075 DIMENSION	C
N-123 6-9-99	EWS		REVISED FOR BLANK VERSION. ADDED -3 WITH COLOR SPECIFICATION AND HOUSING I.D. NUMBER	D
P-5143 2/21/00	DV	RM	CHART UNDER CHAMBERLAIN G.E. 1054 (DARK BLUE) WAS G.E. 22902 AND RECYCLING NO. REMOVED	E
R-5854 11/29/01	DV	RM	.021±.004 WAS .021±.003/-.002 AND REMOVED NOTE 10	F
T-117 17APR02	LAK		ADDED 093D0207-4 & NOTE 10	G
T-183 21MAY02	LAK		ADDED 093D0207-5; LOC. B4; ADDED 093D0207-5 TO NOTE 10.	H
T-269 25JUL02	LAK	TH	ADDED 093D0207-6 AND -7; ADDED NOTE 11 AND SHEET 2; MOVED CHART TO SHEET 2.	J
T-305 8AUG02	EWS	RK RF	REMOVED DASH 7; CHANGED MODEL NUMBER ON DASH 6. SEE CHART ON SHEET 2	K

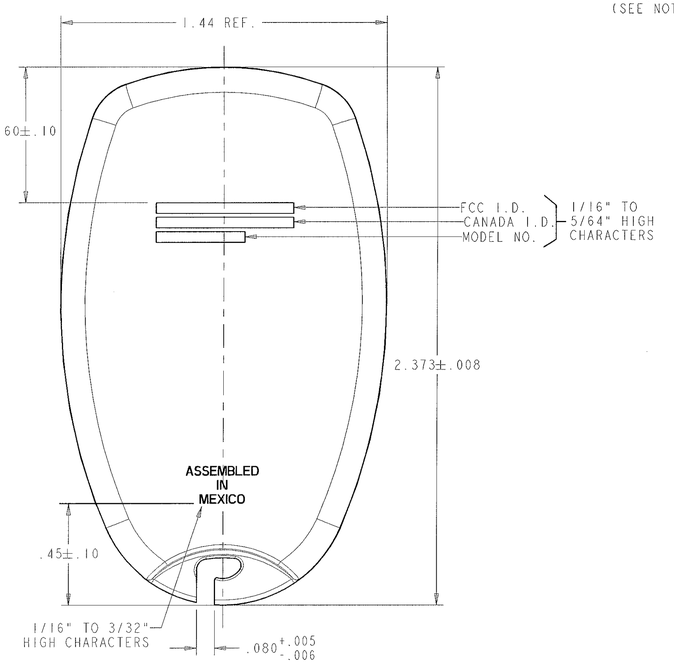

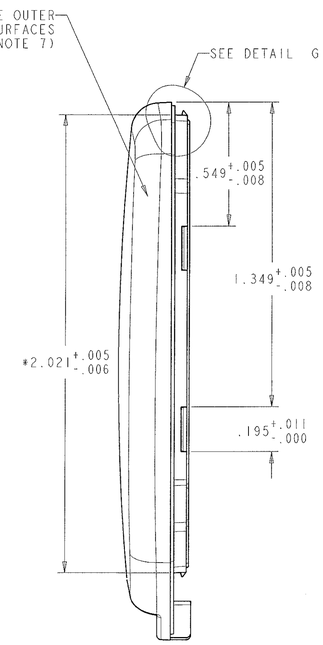

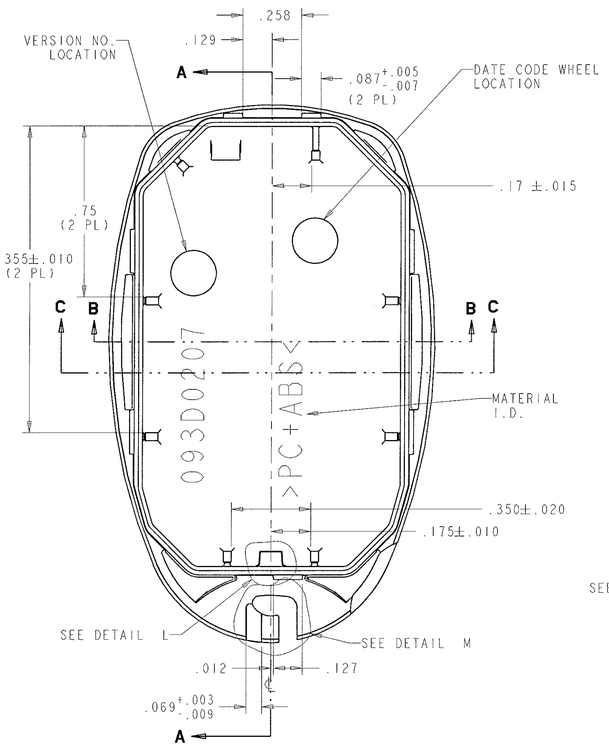

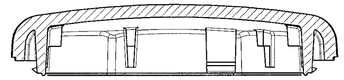

SECTION C-C

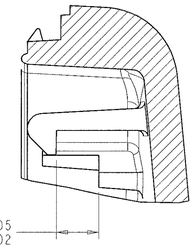

DETAIL J
SCALE 8X

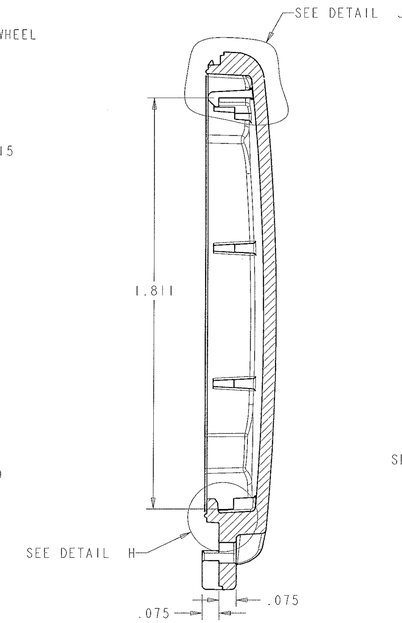

SECTION A-A

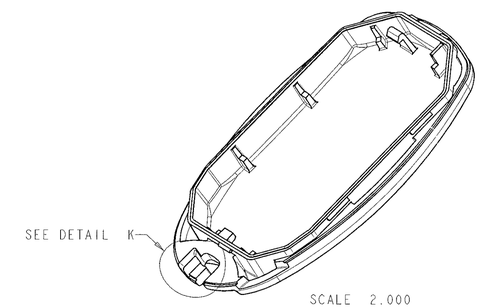

SCALE 2.000

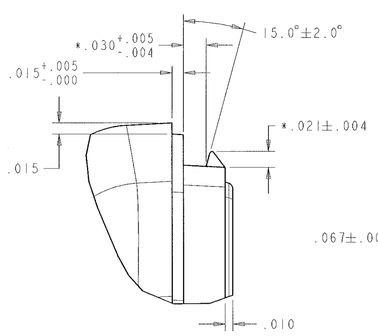

DETAIL G
SCALE 10X
(7 PL)

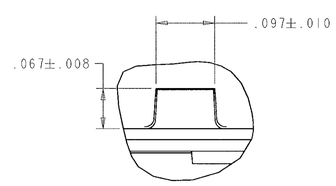

DETAIL L
SCALE 8X

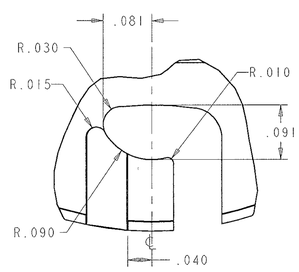

DETAIL M
SCALE 8X

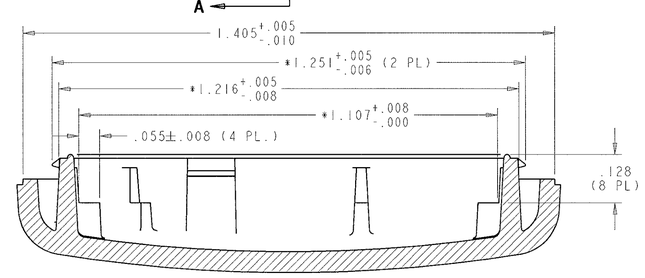

SECTION B-B
SCALE 5X

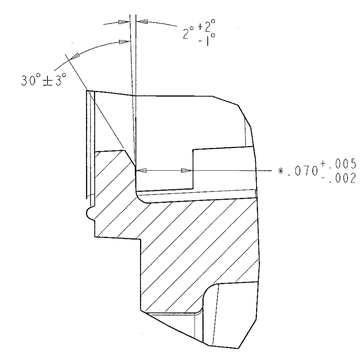

DETAIL H
SCALE 11X

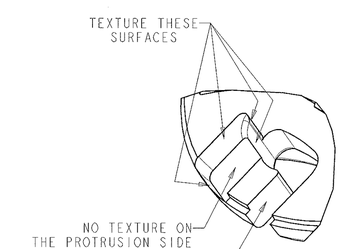

DETAIL K
SCALE 6.000

THIRD ANGLE PROJECTION

CONFIDENTIAL
THIS DRAWING AND/OR INFORMATION CONTAINED HEREIN IS AND REMAINS THE SOLE PROPERTY OF, AND IS PROPRIETARY TO, THE CHAMBERLAIN GROUP, INC. (CHAMBERLAIN). THIS DRAWING AND/OR INFORMATION SHALL BE KEPT CONFIDENTIAL AND NOT DISCLOSED TO OTHERS, EXCEPT WITH THE EXPRESS WRITTEN CONSENT OF CHAMBERLAIN, NOR MADE AVAILABLE TO OTHERS, EXCEPT WITH THE EXPRESS WRITTEN CONSENT OF CHAMBERLAIN. THIS DRAWING AND/OR ALL COPIES, IF ANY, ARE SUBJECT TO RETURN TO CHAMBERLAIN.

THIS IS A COMPUTER GENERATED DRAWING
DO NOT CHANGE THIS DOCUMENT WITHOUT UPDATING THE COMPUTER DATA BASE

TOLERANCES EXCEPT AS NOTED:
±.010 .00 DECIMAL
±.005 .000 DECIMAL
±1/64 ON FRACTIONS
±30' ON ANGLES
±.003 ON HOLES

THIS COPY ISSUED:

DO NOT SCALE DRAWING

FINISH	SEE NOTES		
DRAWN	BY MF	DATE 15MAY97	
CHECKED	RJN	10-20-97	
APPROVED	KJD	10-20-97	

CHAMBERLAIN CONSUMER PRODUCTS GROUP
A UNIT OF DUCHOSSOIS INDUSTRIES, INC

NAME: BOTTOM HOUSING

MATERIAL: SEE NOTES

SCALE	PART NUMBER	REV
3:1	093D0207 THRU -6 SHEET 1 OF 2	K

PRODUCT LINE	PART NO.	COLOR	HOUSING I.D. NUMBER
LIFT MASTER	093D0207	G.E. 701 (BLACK)	FCC HBW 1252 CANADA 102 623 MODEL 970
CHAMBERLAIN	093D0207-1	G.E. 1054 (DARK BLUE)	FCC HBW 1252 CANADA 102 623 MODEL 956
MASTER MECHANIC	093D0207-2	G.E. 701 (BLACK)	FCC HBW 1252 CANADA 102 623 MODEL 956
"BLANK"	093D0207-3	G.E. 701 (BLACK)	FCC HBW 1252 CANADA 102 623 MODEL 956
LIFT MASTER GENERIC	093D0207-4	G.E. 701 (BLACK)	FCC HBW 1630 MODEL 970-315LG (SEE NOTE 10)
CHAMBERLAIN MERIK	093D0207-5	G.E. 1054 (DARK BLUE)	FCC HBW 1630 MODEL 956-315CB (SEE NOTE 10)
PASSPORT	093D0207-6	GY4A469 (CMR#3489 STD)	FCC HBW 1665 MODEL CPTK IC 2666A-TXPP2

PART NUMBER: 093D0207 THRU -6 SHEET 2 OF 2 REV K

ECN/DATE	BY	APP	REVISION	REV
			SEE SHEET 1	

THIRD ANGLE PROJECTION

CONFIDENTIAL

THIS DRAWING AND/OR INFORMATION CONTAINED HEREIN IS AND REMAINS THE SOLE PROPERTY OF, AND IS PROPRIETARY TO, THE CHAMBERLAIN GROUP, INC. (CHAMBERLAIN). THIS DRAWING AND/OR INFORMATION SHOULD BE KEPT CONFIDENTIAL AND NOT DISCLOSED TO OTHERS, EXCEPT WITH THE EXPRESS WRITTEN CONSENT OF CHAMBERLAIN. THIS DRAWING AND/OR ALL COPIES, IF ANY, ARE SUBJECT TO RETURN TO CHAMBERLAIN.

THIS IS A COMPUTER GENERATED DRAWING
DO NOT CHANGE THIS DOCUMENT WITHOUT
UPDATING THE COMPUTER DATA BASE

TOLERANCES EXCEPT AS NOTED:
±.010 .00 DECIMAL
±.005 .000 DECIMAL
±1/64 ON FRACTIONS
±30' ON ANGLES
±.003 ON HOLES

THIS COPY ISSUED:

DO NOT SCALE DRAWING

FINISH	SEE NOTES (ON SHEET 1)		
DRAWN	BY MP	DATE 15MAY97	
CHECKED	RJN	10-20-97	
APPROVED	KJD	10-20-97	

CHAMBERLAIN CONSUMER PRODUCTS GROUP
A UNIT OF DUCHOSSOIS INDUSTRIES, INC

NAME: BOTTOM HOUSING

MATERIAL: SEE NOTES (ON SHEET 1)

SCALE	PART NUMBER	REV
	093D0207 THRU -6 SHEET 2 OF 2	K