Wall Mount Wi-Fi® Garage Door Opener

Model 8500W

For Residential Use
Install On Sectional Doors With Torsion Assemblies Only

DRAFT 5

This product is intended for installation only by trained garage door technicians. This product may require adjustments to door springs and/or track configurations. This product is not intended for use on low headroom tracks with outside pickup drum or garage doors utilizing extension springs.

- **Please read this manual and the enclosed safety materials carefully!**
- **The door WILL NOT CLOSE unless the Protector System® and cable tension monitor are connected and properly aligned.**
- **Periodic checks of the garage door opener are required to ensure safe operation.**
- **The model number is located on the front cover of the opener.**
- **This garage door opener is ONLY compatible with MyQ® and Security+ 2.0® accessories.**
- **Attach warning labels to the location indicated on label.**

Register your garage door opener to receive updates and offers from LiftMaster

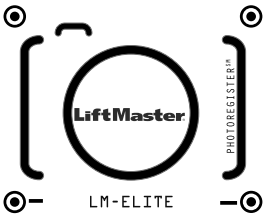

1. **Take a photo** of the camera icon including the points (⦿).
2. **Send it in** by texting the photo to 71403 (US) **or visit** www.liftmaster.photo (Global)

LISTED
LiftMaster
300 Windsor Drive
Oak Brook, IL 60523

LiftMaster®

Table of Contents

MYQ SERIAL NUMBER 2
UNATTENDED OPERATION 2
INTRODUCTION 2
Safety Symbol and Signal Word Review 2
Planning 3
Before You Connect with Your Smartphone 4
Preparing Your Garage Door 5
Tools Needed 5
Carton Inventory 6
Included Accessories 6
Hardware 6
Additional Items You May Need 6
ASSEMBLY 7
Attach the Collar to the Garage Door Opener 7
Attach Mounting Bracket to Garage Door Opener 8
INSTALLATION 8
Position and Mount the Garage Door Opener 9
Attach the Emergency Release Rope and Handle 10
Install Automatic Door Lock 10
Attach the Cable Tension Monitor (Required) 11
Install the Door Control (Smart Control Panel) 12
Install MyQ® LED Remote Light 13
Install the Protector System® 14
Connect Power 17
Install the Battery Backup 19
ADJUSTMENT 20
Program the Travel 20
Test the Safety Reversal System 21
Test the Protector System® 21
Test Cable Tension Monitor 22
Test Automatic Door Lock 22
To Open the Door Manually 22
OPERATION 23
Using Your Garage Door Opener 24
Connect with Your Smartphone 25
Using the Door Control 26
PROGRAMMING 28
893MAX Remote Control 28
Reprogramming MyQ® LED Remote Light 29
To Erase the Memory 29
MAINTENANCE 30
Care of Your Garage Door Opener 30
TROUBLESHOOTING 31
Diagnostic Chart 31
Additional Troubleshooting 32
REPAIR PARTS 34
Installation Parts 34
Garage Door Opener Assembly Parts 35
CONTACT INFORMATION 35
ACCESSORIES 36
WARRANTY 37

MyQ® Serial Number

Write down the following information for future reference:

MyQ® Serial Number:

Product S/N:

Date of Purchase:

/ /

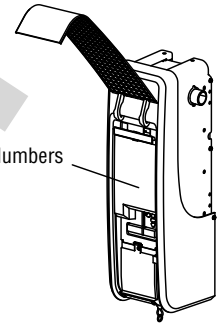

Unattended Operation

The Timer-to-Close (TTC) feature, the MyQ® Smartphone Control app, and MyQ® Garage Door and Gate Monitor are examples of unattended close and are to be used ONLY with sectional doors. Any device or feature that allows the door to close without being in the line of sight of the door is considered unattended close. The Timer-to-Close (TTC) feature, the MyQ® Smartphone Control, and any other MyQ® devices are to be used ONLY with sectional doors.

MyQ Remote LED Light must be installed to enable use of Timer To Close or MyQ Smartphone Control of the door.

Introduction

Safety Symbol and Signal Word Review

This garage door opener has been designed and tested to offer safe service provided it is installed, operated, maintained and tested in strict accordance with the instructions and warnings contained in this manual.

When you see these Safety Symbols and Signal Words on the following pages, they will alert you to the possibility of ***serious injury or death*** if you do not comply with the warnings that accompany them. The hazard may come from something mechanical or from electric shock. Read the warnings carefully.

⚠ WARNING
Mechanical

⚠ WARNING
Electrical

When you see this Signal Word on the following pages, it will alert you to the possibility of damage to your garage door and/or the garage door opener if you do not comply with the cautionary statements that accompany it. Read them carefully.

CAUTION

⚠ **WARNING:** This product can expose you to chemicals including lead, which are known to the State of California to cause cancer or birth defects or other reproductive harm. For more information go to *www.P65Warnings.ca.gov*

DRAFT 5

Introduction

Planning

Survey your area to see if any of the conditions below apply to your installation. Depending on your requirements, additional materials may be required.

NOTE: *Inspect the torsion bar while the door is raised and lowered. It is important that there is no noticeable movement up and down or left and right. If the movement is not corrected, the life of the garage door opener will be greatly reduced.*

THIS DOOR OPENER IS COMPATIBLE WITH:

- Doors that use a torsion bar and springs. The torsion bar must be 1" (2.5 cm) diameter. NOT compatible with reverse wound drums.
- 4-6" (10-15 cm) drums, not to be used on tapered drums over 6" (15 cm).
- High lift (up to 54" (137.2 cm) high) and standard lift sectional doors up to 14 ft. (4.3 m) high.
- Doors up to 18 ft. (5.5 m) wide.
- Doors up to 180 sq. ft. (16.7 sq. m).

Review or inspect proposed installation area. The door opener can be installed on the left or right side of door. Select the side that meets the requirements listed below.

a. Must have minimum of 2.5" (6.4 cm) between the wall and the center of the torsion bar.

b. Must have minimum of 3" (7.6 cm) between the ceiling and the center of torsion bar.

c. Must have minimum of 8.5" (21.6 cm) between the side wall (or obstruction) and the end of torsion bar.

d. The torsion bar must extend at least 1.5" (3.81 cm) past the bearing. This may vary depending on your installation requirements.

e. An electric outlet is required within 6 ft. (1.83 m) of the installation area. If outlet does not exist, contact a qualified electrician.

f. Depending upon building construction, extension brackets or wood blocks may be needed to install safety reversing sensors and cable tension monitor.

g. Alternate floor mounting of the safety reversing sensors will require hardware (not provided).

h. Any gap between the floor and the bottom of the door must not exceed 1/4" (6 mm), otherwise the safety reversing sensors may not work properly.

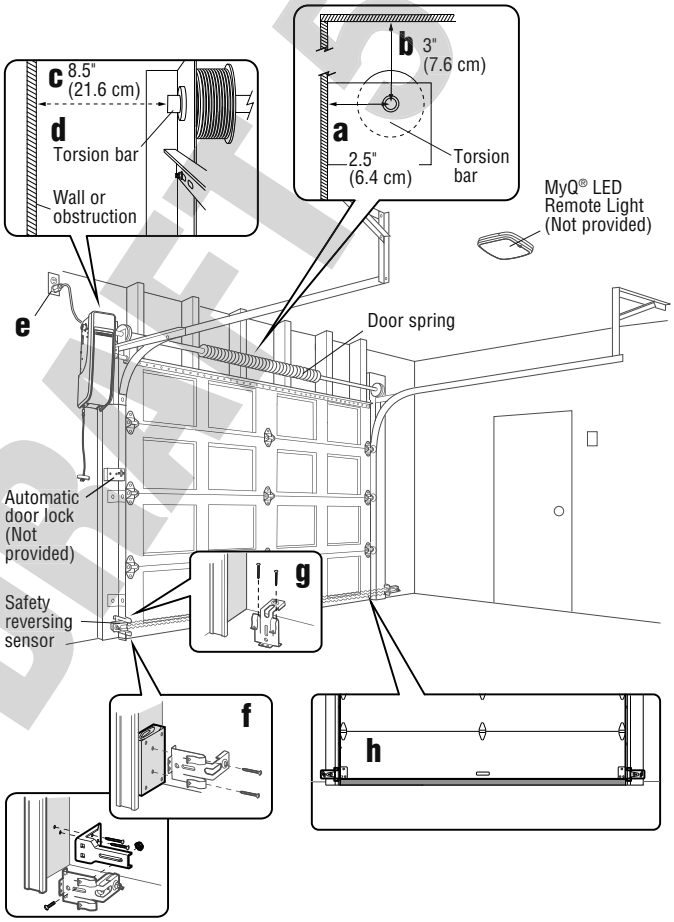

DRAFT 5

Introduction

Before You Connect with Your Smartphone

Monitor and control your garage door from anywhere using the MyQ® app.

BEFORE YOU BEGIN:

You will need:

- Wi-Fi enabled smartphone, tablet or laptop
- Broadband Internet Connection
- Wi-Fi signal in the garage **(2.4 Ghz, 802.11b/g/n required)**
- Password for your home network (router's main account, not guest network)

TEST THE WI-FI SIGNAL STRENGTH

Make sure your mobile device is connected to your Wi-Fi network. Hold your mobile device in the place where your garage door opener will be installed and check the Wi-Fi signal strength.

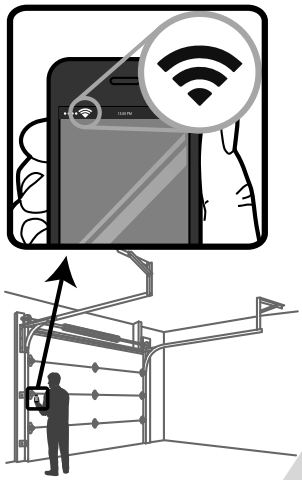

Check Signal Strength. If you see:

Wi-Fi signal is strong.
The garage door opener will connect to your Wi-Fi network.

Wi-Fi signal is weak.
The garage door opener may connect to your Wi-Fi network. If not, try one of the options below to improve the Wi-Fi signal:

No Wi-Fi signal.
The garage door opener will not be able to connect to your Wi-Fi network. Try one of the options below to improve the Wi-Fi signal:

- Move your router closer to the garage door opener to minimize interference from walls and other objects
- Buy a Wi-Fi range extender

For compatible router specifications and help, visit WiFiHelp.LiftMaster.com.
See page 25 to connect the garage door opener to a mobile device.

DRAFT 5

Introduction

Preparing Your Garage Door

BEFORE YOU BEGIN:

- Disable locks.
- Remove any ropes connected to the garage door.

Complete the following test to make sure the garage door is balanced and is not sticking or binding:

1. Lift the door halfway up. Release the door. If balanced, it should stay in place, supported entirely by its springs.
2. Raise and lower the door to check for binding or sticking.
3. Doors heavier than 650 lbs. should NOT open or fall rapidly.

If your door binds, sticks, or is out of balance, call a trained door systems technician.

4. Verify equal cable tension on each side of door. Cable tension should remain equal during the entire travel of the door.

Sectional Door

⚠ WARNING

To prevent possible SERIOUS INJURY or DEATH:

- ALWAYS call a trained door systems technician if garage door binds, sticks, or is out of balance. An unbalanced garage door may NOT reverse when required.
- NEVER try to loosen, move or adjust garage door, door springs, cables, pulleys, brackets or their hardware, ALL of which are under EXTREME tension.
- Disable ALL locks and remove ALL ropes connected to garage door BEFORE installing and operating garage door opener to avoid entanglement.
- This opener system is equipped with an unattended operation feature. The door could move unexpectedly. NO ONE SHOULD CROSS THE PATH OF THE MOVING DOOR.

CAUTION

To prevent damage to garage door and opener:

- ALWAYS disable locks BEFORE installing and operating the opener.
- ONLY operate garage door opener at 120V, 60 Hz to avoid malfunction and damage.

SPECIFICATIONS

Volts	120 Vac - 60 Hz, ONLY
Current	1.5 AMP
LED Light Current (independently powered)	0.2 AMPS

DRAFT 3

Tools Needed

During assembly, installation and adjustment of the garage door opener, instructions will call for hand tools as illustrated below.

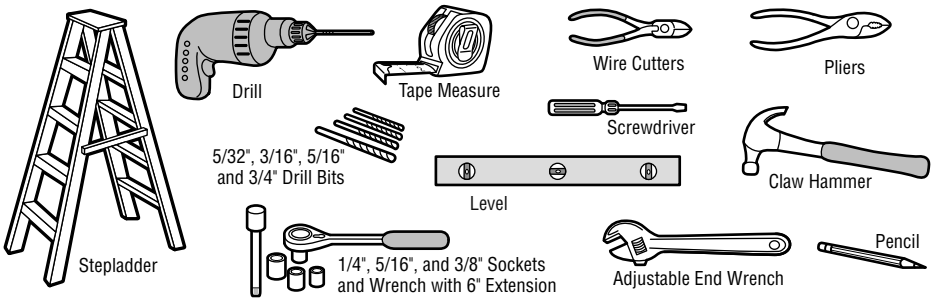

Introduction

Carton Inventory

If anything is missing, carefully check the packing material.

Included Accessories

DRAFT

Hardware

Screw #10-32 (2)
Screw 14-10x2" (4)
Handle
Rope
Screw 1/4"-20x1/2" (2)
Drywall Anchor (Screw-In) (2)
Screw 8-32x1" (2)
Screw 6ABx1-1/4" (2)
Drywall Anchor (2)
Screw 6-32x1" (2)
Carriage Bolt 1/4"-20x1/2" (2)
Wing Nut 1/4"-20 (2)

REMOTE LIGHT HARDWARE:
MyQ® LED Remote Light Model 827LM
Drywall Anchor (Screw-In) (2)
Screw #6x1" (2)

Additional Items You May Need

Extension brackets (Model 041A5281-1) or wood blocks: Depending upon garage construction, extension brackets or wood blocks may be needed to install the safety reversing sensor.

Fastening hardware: Alternate floor mounting of the safety reversing sensor will require hardware not provided.

90˚ connector for cable conduit or flex cable adapter: Required for permanent wiring.

Assembly

1 Attach the Collar to the Garage Door Opener

To avoid installation difficulties, do not run the garage door garage door opener until instructed to do so.

The garage door opener can be installed on either side of the door (see Planning section page 3). The illustrations shown are for installation on the left side.

1. Loosen the set screws.
2. Attach collar to the garage door opener motor shaft. The side of the collar with the larger hole should be placed on the motor shaft. Ensure that the collar is seated all the way on motor shaft until stop is reached.
3. Position the collar so the screws are facing out and are accessible when attached to the torsion bar.
4. Securely tighten the 2 square head set screws closest to the motor shaft by turning the screws 1/4 - 1/2 turn after making contact with the motor shaft.

⚠ WARNING

To prevent possible SERIOUS INJURY or DEATH, the collar MUST be properly tightened. The door may NOT reverse correctly or limits may be lost due to collar slip.

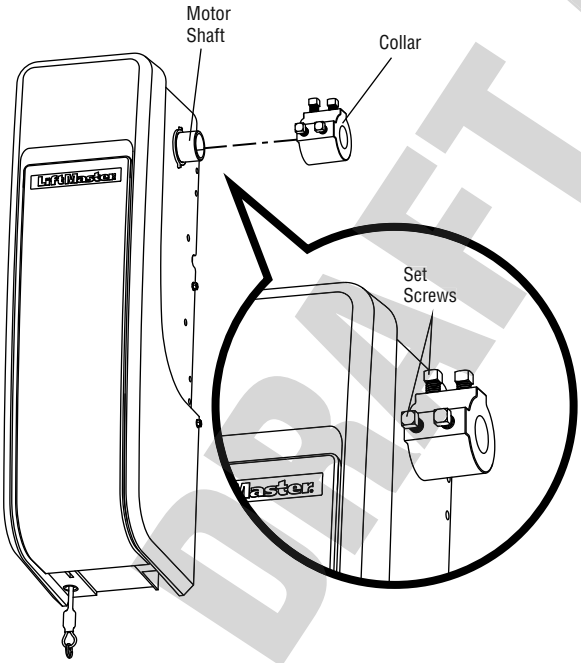

DRAFT 5

Assembly

2 Attach Mounting Bracket to Garage Door Opener

HARDWARE

Screw
#10-32 (2)

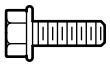

1. Loosely attach slotted side of mounting bracket to the same side of the garage door opener as the collar, using screws provided.

   NOTE: *Do not tighten screws until instructed.*

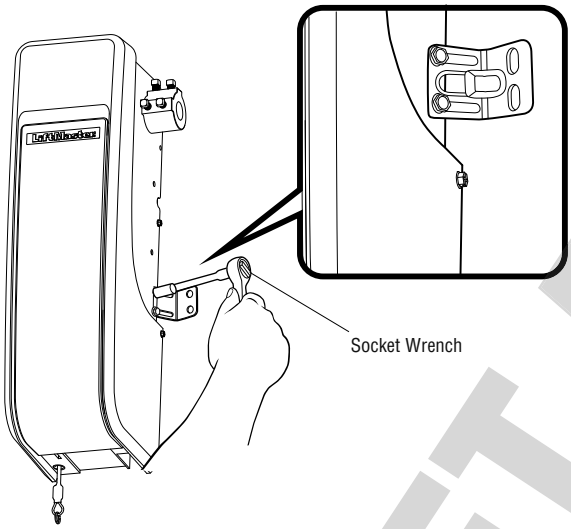

Installation

IMPORTANT INSTALLATION INSTRUCTIONS

⚠ WARNING

To reduce the risk of SEVERE INJURY or DEATH:

1. Read and follow all warnings and instructions.
2. Install garage door opener ONLY on properly balanced and lubricated garage door. An improperly balanced door may NOT reverse when required and could result in SEVERE INJURY or DEATH.
3. ALL repairs to cables, spring assemblies and other hardware MUST be made by a trained door systems technician BEFORE installing opener.
4. Disable ALL locks and remove ALL ropes connected to garage door BEFORE installing opener to avoid entanglement.
5. Where possible, install the door opener 7 feet (2.13 m) or more above the floor.
6. Mount the emergency release within reach, but at least 6 feet (1.83 m) above the floor and avoiding contact with vehicles to avoid accidental release.
7. NEVER connect garage door opener to power source until instructed to do so.
8. NEVER wear watches, rings or loose clothing while installing or servicing opener. They could be caught in garage door or opener mechanisms.
9. Install wall-mounted garage door control:
   - within sight of the garage door.
   - out of reach of small children at a minimum height of 5 feet (1.53 m) above floors, landings, steps or any other adjacent walking surface.
   - away from ALL moving parts of the door.
10. Install the emergency release marking. Attach the marking on or next to the emergency release. Install the entrapment warning placard next to the door control in a prominent location.
11. Place emergency release/safety reverse test label in plain view on inside of garage door.
12. Upon completion of installation, test safety reversal system. Door MUST reverse on contact with a 1-1/2" (3.8 cm) high object (or a 2x4 laid flat) on the floor.
13. To avoid SERIOUS PERSONAL INJURY or DEATH from electrocution, disconnect ALL electric and battery power BEFORE performing ANY service or maintenance.
14. **SAVE THESE INSTRUCTIONS.**

DRAFT 5

Installation

1 Position and Mount the Garage Door Opener

NOTE: *For additional mounting options refer to the accessories page.*

1. Close the garage door completely.
2. Slide the garage door opener onto the end of the torsion bar. If the torsion bar is too long or damaged, you may need to cut the torsion bar.

   Ensure the collar does NOT touch the bearing.
3. Use a level to position and vertically align the garage door opener. Verify the mounting bracket is located on a solid surface such as wood, concrete or door/flag bracket. If installing on drywall, the mounting bracket MUST be attached to a stud.
4. When the garage door opener is properly aligned, mark the mounting bracket holes. If necessary, tighten collar screws on the torsion bar to hold garage door opener in place while marking holes.

   NOTE: *The garage door opener does not have to be flush to wall.*
5. Remove the garage door opener from torsion bar. Drill 3/16 inch pilot holes at the marked locations. Drill through metal door rail plates if necessary.
6. Slide the garage door opener back onto the torsion bar until pilot holes align with bracket.
7. Tighten the 2 square head set screws on the torsion bar. For a hollow torsion bar, tighten screws 3/4 - 1 full turn after making contact with the bar. For a solid shaft torsion bar, tighten screws 1/4 - no more than 1/2 turn after making contact with the shaft. If installing on a keyed torsion bar, DO NOT tighten the screws into the keyway.
8. Secure the mounting bracket to the wall and to the garage door opener. Use the 14-10 x 2" screws to secure the mounting bracket to the wall.

⚠ WARNING

To prevent possible SERIOUS INJURY or DEATH:

- Concrete anchors MUST be used if mounting bracket into masonry.
- NEVER try to loosen, move or adjust garage door, springs, cables, pulleys, brackets or their hardware, ALL of which are under EXTREME tension.
- ALWAYS call a trained door systems technician if garage door binds, sticks or is out of balance. An unbalanced garage door might NOT reverse when required.
- Garage door opener MUST be mounted at a right angle to the torsion bar to avoid premature wear on the collar.

HARDWARE

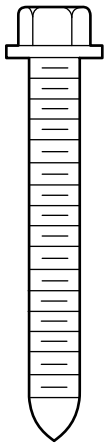

Screw
14-10 x 2" (2)

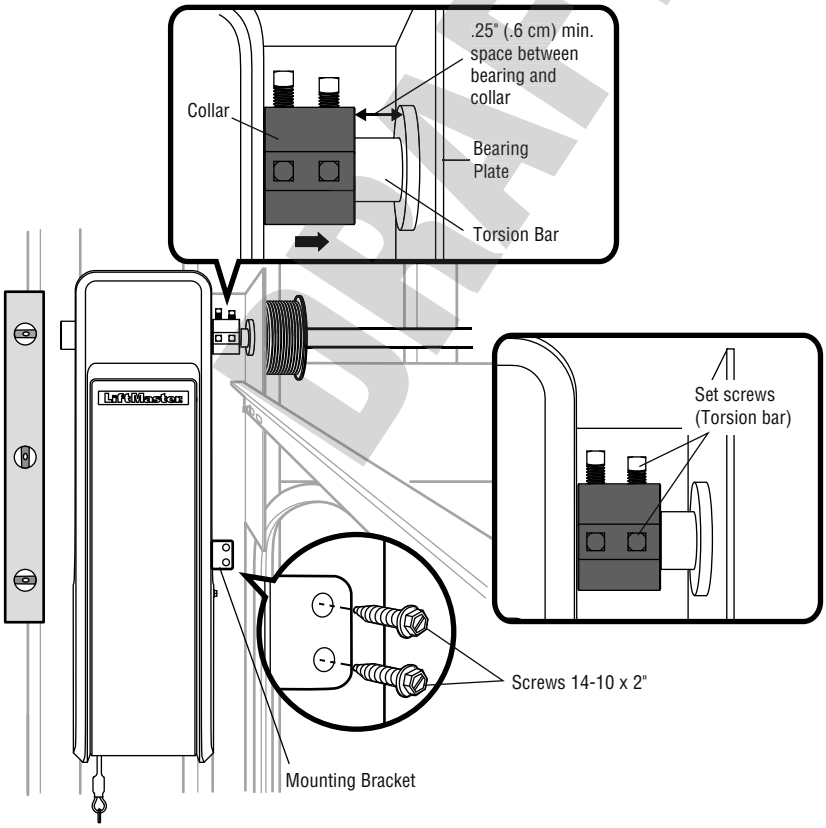

DRAFT 5

2 Attach the Emergency Release Rope and Handle

1. Insert one end of the emergency release rope through the handle. Make sure that "NOTICE" is right side up. Secure with an overhand knot at least 1" (2.5 cm) from the end of the rope to prevent slipping.
2. Insert the other end of the emergency release rope through the hole in the trolley release arm. Mount the emergency release within reach, but at least 6 feet (1.83 m) above floor, avoiding contact with vehicles to prevent accidental release and secure with an overhand knot.

NOTE: *If it is necessary to cut the rope, heat seal the cut end with a match or lighter to prevent unraveling.*

⚠ WARNING

To prevent possible SERIOUS INJURY or DEATH from a falling garage door:

- If possible, use emergency release handle to disengage door ONLY when garage door is CLOSED. Weak or broken springs or unbalanced door could result in an open door falling rapidly and/or unexpectedly.
- NEVER use emergency release handle unless garage doorway is clear of persons and obstructions.

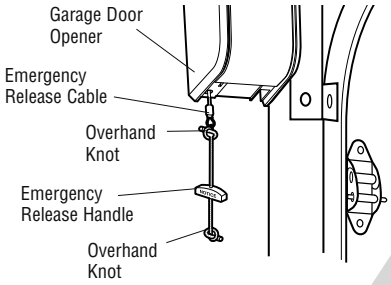

HARDWARE

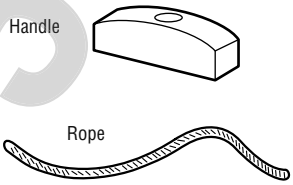

3 Install the Automatic Door Lock

The automatic door lock (model 841LM) is used to prevent the door from being manually opened once the door is fully closed, see Accessories page 36

NOTE: *Older model 24 V door locks are incompatible.*

1. The lock must be mounted within 10 ft. (3.05 m) of door opener If possible, mount on same side as door opener. The third roller from the bottom is ideal for most installations.
2. Ensure rail surface is clean and attach the lock template to the track so that the bolt hole is approximately 3" (7.6 cm) from the center of a door roller.
3. Drill holes as marked on the template.
4. Fasten automatic door lock to the outside of the door track with hardware provided.
5. Run bell wire up wall to door opener. Use insulated staples to secure wire in several places. Insert wire through the bottom of the door opener.
6. Plug the connector into either plug in the door opener.

A secondary door lock can be installed on the opposite side of the door following the instructions above.

HARDWARE

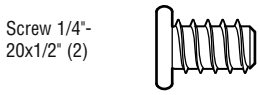

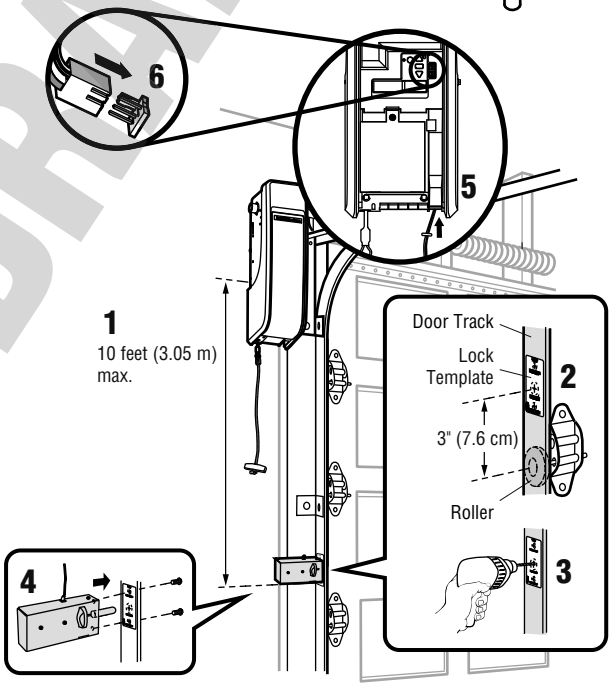

DRAFT 5

Installation

4 Attach the Cable Tension Monitor (Required)

NOTE: *The cable tension monitor is shipped for left side installation. It is recommended that the cable tension monitor be installed on the same side of the door as the door opener. For right side installation, remove the snap-ring holding the roller in place and reassemble it on the opposite side of the cable tension monitor.*

1. Make sure the door cable is approximately 3/4" (19 mm) from the mounting surface. Door adjustments or shimming may be required to achieve proper depth for the door cable.
2. Position the cable tension monitor so the roller is 2"-6" from the drum and the roller extends 1/8"-1/4" past the cable. Make sure cable tension monitor is located over a wood support member and the roller is free from any obstructions.
   NOTE: *There must be no obstructions in the installation area that prevent the cable tension monitor from closing completely when slack is detected.*
3. Mark and drill 3/16" pilot holes for screws (pilot holes are not required for anchors).
4. Attach the cable tension monitor to the wall using the hardware provided. Make sure that the roller is on top of the cable.
5. Run bell wire to door opener. Use insulated staples to secure wire.
6. Connect bell wire to the green quick-connect terminals on the door opener (polarity is not important).
   NOTE: *Cable must have tension through entire door travel. Make sure there is no slack in cable on opposite side of door during normal operation. If slack occurs during door travel, adjust cables as required.*

A second cable tension monitor may be installed for additional security. When two cable tension monitors are installed, the door will not move in the down direction or will reverse if one of the monitors detects slack or is disconnected.

If one of the cable tension monitors is removed, unplug both monitors from the opener. Then plug in the monitor you wish to use and unplug and plug in the opener three times to relearn the monitor to the opener.

The cable tension monitor MUST be connected and properly installed before the garage door opener will move in the down direction.

The cable tension monitor detects ANY slack that may occur in the cables and will reverse the door, eliminating service calls.

HARDWARE

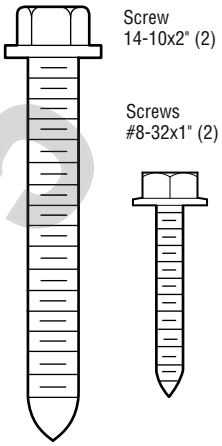

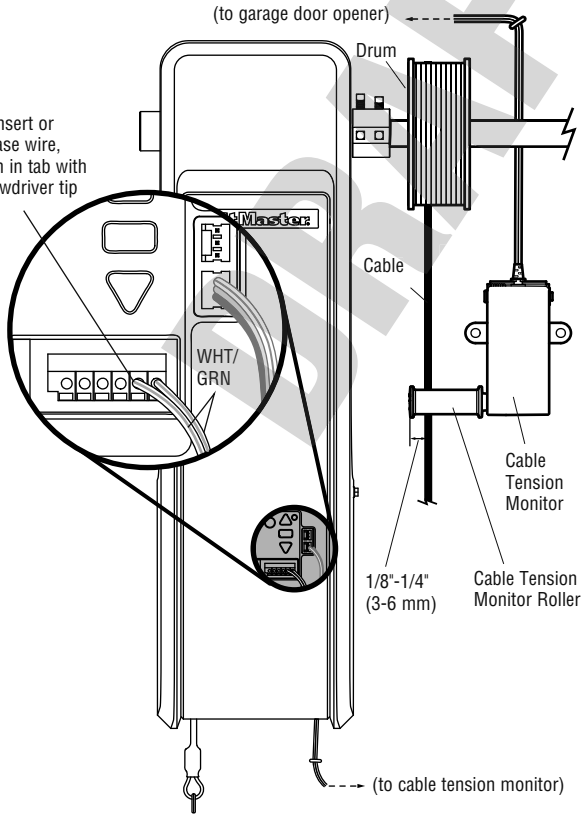

SIDE VIEW

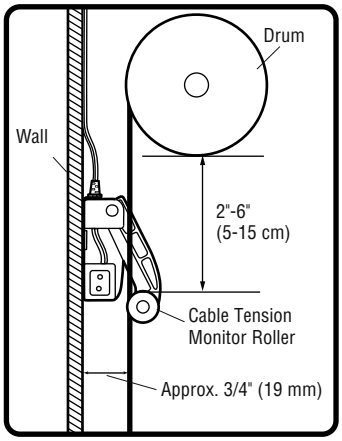

DRAFT 5

5 Install the Door Control (Smart Control Panel)

Install door control within sight of garage door, out of reach of small children at a minimum height of 5 feet (1.5 m) above floors, landings, steps or any other adjacent walking surface, and away from ALL moving parts of door.

Your garage door opener is compatible with up to 2 Smart Control Panels or 4 of any other Security+ 2.0® door controls. ***NOTE:*** *Older LiftMaster door controls and third party products are not compatible.*

For gang box installations it is not necessary to drill holes or install the drywall anchors. Use the existing holes in the gang box.

1. Strip 7/16" (11 mm) of insulation from one end of the wire and separate the wires.
2. Connect one wire to each of the two screws on the back of the door control. The wires can be connected to either screw. **PRE-WIRED INSTALLATIONS:** Choose any two wires to connect, but make note of which wires are used.
3. Mark the location of the bottom mounting hole and drill a 5/32" (4 mm) hole.
4. Install the bottom screw, allowing 1/8" (3 mm) to protrude from the wall.
5. Position the bottom hole of the door control over the screw and slide down into place.
6. Lift the push bar up and mark the top hole.
7. Remove the door control from the wall and drill a 5/32" (4 mm) hole for the top screw.
8. Position the bottom hole of the door control over the screw and slide down into place. Attach the top screw.
9. Run the white and red/white wire from the door control to the garage door opener. Attach the wire to the wall and ceiling with the staples (not applicable for gang box or pre-wired installations). Do not pierce the wire with the staple as this may cause a short or an open circuit.
10. Connect the wire to the red and white terminals on the garage door opener. The wires can be connected to either terminal.
11. Fasten the warning placard to the wall next to the door control.

NOTE: *DO NOT connect the power and operate the garage door opener at this time. The door will travel to the full open position but will not return to the close position until the safety reversing sensors are connected and properly aligned.* *See page 14.*

⚠ WARNING

To prevent possible SERIOUS INJURY or DEATH from electrocution:
- Be sure power is NOT connected BEFORE installing door control.
- Connect ONLY to 7-28 VOLT low voltage wires.

To prevent possible SERIOUS INJURY or DEATH from a closing garage door:
- Install door control within sight of garage door, out of reach of small children at a minimum height of 5 feet (1.5 m) above floors, landings, steps or any other adjacent walking surface, and away from ALL moving parts of door.
- NEVER permit children to operate or play with door control push buttons or remote control transmitters.
- Activate door ONLY when it can be seen clearly, is properly adjusted, and there are no obstructions to door travel.
- ALWAYS keep garage door in sight until completely closed. NEVER permit anyone to cross path of closing garage door.

HARDWARE

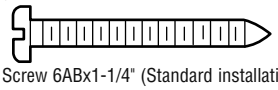

Screw 6ABx1-1/4" (Standard installation) (2)

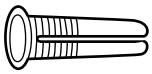

Drywall Anchors (2)

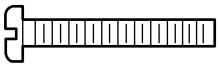

Screw 6-32x1" (pre-wired) (2)

Insulated Staples (Not shown)

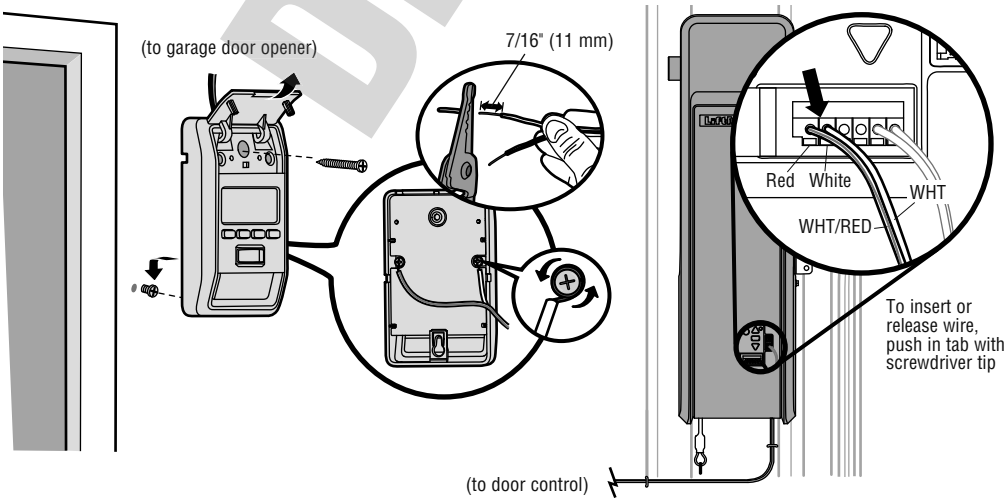

DRAFT

IMPORTANT INSTALLATION INSTRUCTIONS

⚠⚠ WARNING

To reduce the risk of SEVERE INJURY or DEATH:

- This portable luminaire has a polarized plug (one blade is wider than the other) as a feature to reduce the risk of electric shock.
- This plug will fit in a polarized outlet ONLY one way. If the plug does not fit fully in the outlet, reverse the plug. If it still does not fit, contact a qualified electrician.
- DO NOT alter the plug.
- Light is intended for ceiling or wall mount and indoor applications ONLY.

6 Install MyQ® LED Remote Light

The MyQ LED Remote Light is designed to plug directly into a standard 120V outlet. Select an appropriate location on the ceiling or wall to mount the light within 6 feet (1.83 m) of an electrical outlet so that the cord and light are away from moving parts.

NOTE: *If installing light on drywall and a ceiling joist cannot be located, use drywall anchors provided. No pilot hole is required for drywall anchors.*

1. Drill pilot holes 6-1/8" (15.6 cm) apart if mounting to joist.

   OR

   Screw in drywall anchors 6-1/8" (15.6 cm) apart if mounting to drywall.
2. Determine the length of power cord needed to reach the nearest outlet. Wind any excess cord around cord retainer on the top side of the light base. Route the cord through the channel so the light mounts flush.
3. Open the light lens.
4. Mount the light with the screws provided.
5. Close the light lens.
6. Plug in the light to the outlet.

   NOTE: *The LED light is very bright. DO NOT stare at the light while on a ladder.*

Your garage door opener remote light has already been programmed at the factory to operate with your opener. Any additional or replacement remote lights will need to be programmed.

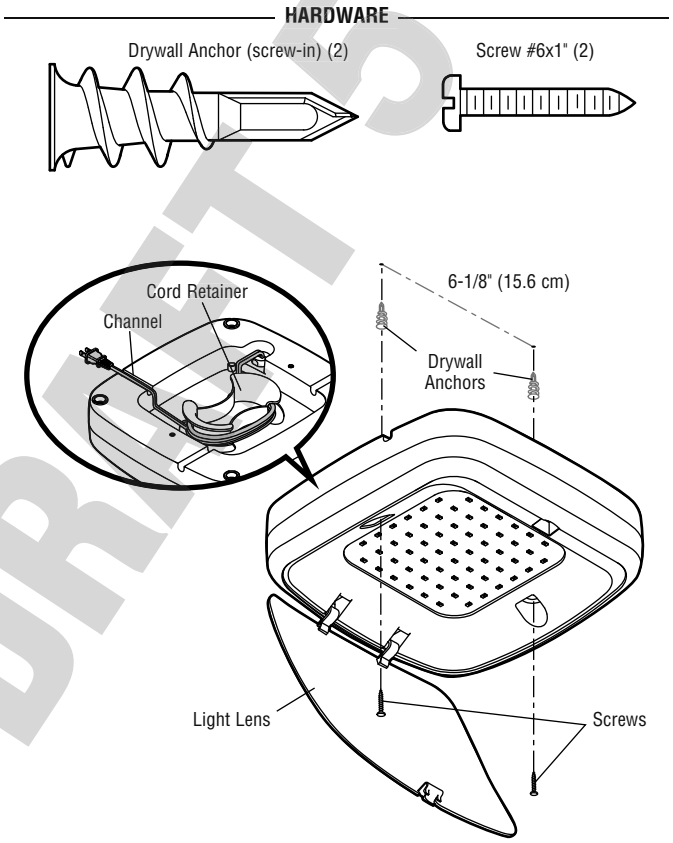

DRAFT 5

7 Install the Protector System®

The safety reversing sensor must be connected and aligned correctly before the garage door will move in the down direction. This is a required safety device and cannot be disabled.

IMPORTANT INFORMATION ABOUT THE SAFETY REVERSING SENSOR

When properly connected and aligned, the safety reversing sensor will detect an obstacle in the path of its electronic beam. The sending sensor (with an amber indicator light) transmits an invisible light beam to the receiving sensor (with a green indicator light). If an obstruction breaks the light beam while the door is closing, the door will stop and reverse to full open position, and the opener lights will flash 10 times.

The sensors must be installed inside the garage so that the sending and receiving sensors face each other across the door, no more than 6 inches (15 cm) above the floor. Either can be installed on the left or right of the door as long as the sun never shines directly into the receiving sensor lens.

The mounting brackets are designed to clip onto the track of sectional garage doors without additional hardware.

If it is necessary to mount the sensors on the wall, the brackets must be securely fastened to a solid surface such as the wall framing. Extension brackets (see accessories) are available if needed. If installing in masonry construction, add a piece of wood at each location to avoid drilling extra holes in masonry if repositioning is necessary.

The invisible light beam path must be unobstructed. No part of the garage door (door tracks, springs, hinges, rollers or other hardware) may interrupt the beam while the door is closing.

⚠ WARNING

Be sure power is NOT connected to the garage door opener BEFORE installing the safety reversing sensor.

To prevent SERIOUS INJURY or DEATH from a closing garage door:

- Correctly connect and align the safety reversing sensor. This required safety device MUST NOT be disabled.
- Install the safety reversing sensor so beam is NO HIGHER than 6" (15 cm) above garage floor.

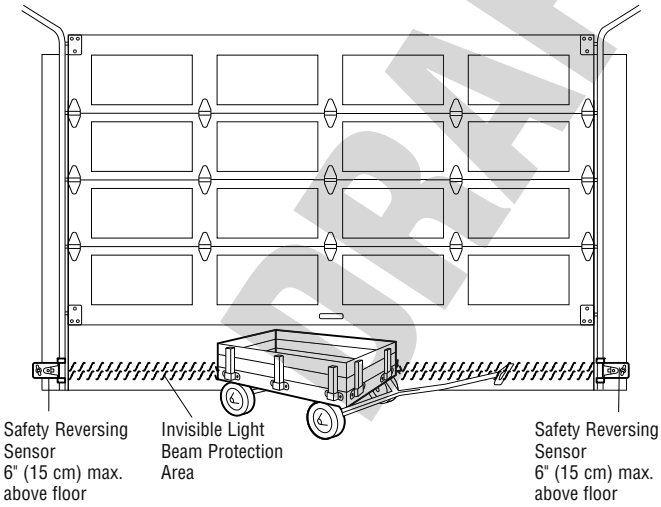

Facing the door from inside the garage.

DRAFT 5

Installation

INSTALLING THE BRACKETS

Be sure power to the opener is disconnected. Install and align the brackets so the safety reversing sensors will face each other across the garage door, with the beam no higher than 6" (15 cm) above the floor. Choose one of the following installations.

OPTION A: Track Installation

1. Slip the curved arms over the rounded edge of each door track, with the curved arms facing the door. Snap into place against the side of the track. It should lie flush, with the lip hugging the back edge of the track, as shown.

If your door track will not support the bracket securely, wall installation is recommended.

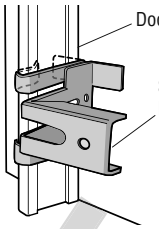

OPTION B: Wall Installation

1. Place the bracket against the wall with curved arms facing the door. Be sure there is enough clearance for the sensor beam to be unobstructed.
2. If additional depth is needed, an extension bracket (see Accessories) or wood blocks can be used.
3. Use bracket mounting holes as a template to locate and drill (2) 3/16" diameter pilot holes on the wall at each side of the door, no higher than 6" (15 cm) above the floor.
4. Attach brackets to wall with lag screws (not provided).

If using extension brackets or wood blocks, adjust right and left assemblies to the same distance out from the mounting surface. Make sure all door hardware obstructions are cleared.

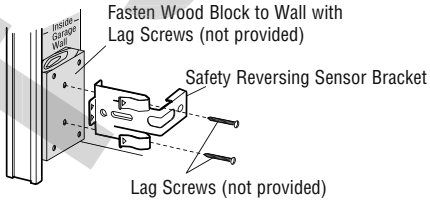

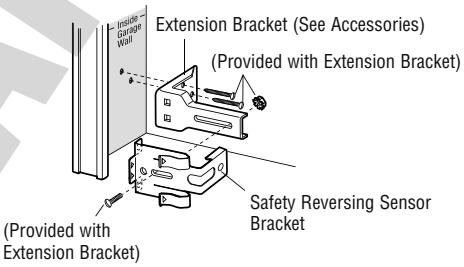

OPTION C: Floor Installation

1. Use wood blocks or extension brackets (see Accessories) to elevate sensor brackets so the lenses will be no higher than 6" (15 cm) above the floor.
2. Carefully measure and place right and left assemblies at the same distance out from the wall. Be sure all door hardware obstructions are cleared.
3. Fasten to the floor with concrete anchors as shown.

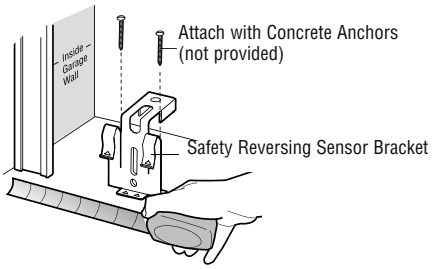

DRAFT 5

Installation

MOUNTING THE SAFETY REVERSING SENSORS

1. Slide a 1/4"-20x1/2" carriage bolt head into the slot on each sensor.
2. Use wing nuts to fasten safety reversing sensors to brackets, with lenses pointing toward each other across the door. Be sure the lens is not obstructed by a bracket extension.
3. Finger tighten the wing nuts.

HARDWARE

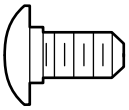

Carriage Bolt
1/4"-20x1/2" (2)

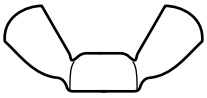

Wing Nut
1/4"-20 (2)

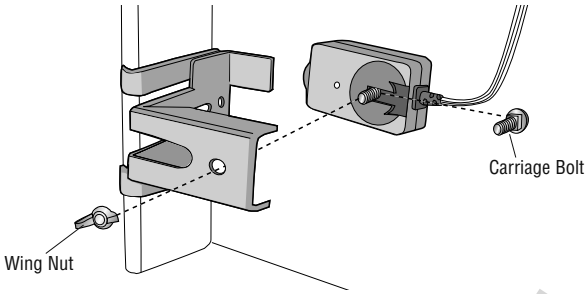

WIRE THE SAFETY REVERSING SENSORS

1. Run the wire from both sensors to the garage door opener. Attach the wire to the wall and ceiling with the staples.
2. Strip 7/16 inch (11 mm) of insulation from each set of wires. Separate the wires. Twist the white wires together. Twist the white/black wires together.
3. Insert the white wires into the white terminal on the garage door opener. Insert the white/black wires into the grey terminal on the garage door opener. To insert or remove the wires from the terminal, push in the tab with a screwdriver tip.

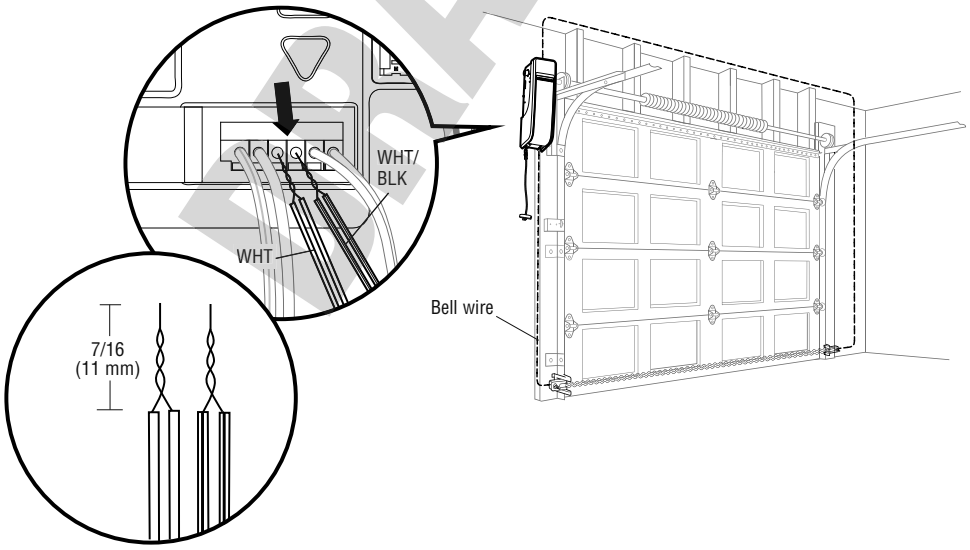

DRAFT 5

8 Connect Power

To avoid installation difficulties, do not run the garage door opener at this time.

To reduce the risk of electric shock, your garage door opener has a grounding type plug with a third grounding pin. This plug will only fit into a grounding type outlet. If the plug doesn't fit into the outlet you have, contact a qualified electrician to install the proper outlet.

There are two options for connecting power:

⚠ WARNING

To prevent possible SERIOUS INJURY or DEATH from electrocution or fire:

- Be sure power is NOT connected to the opener, and disconnect power to circuit BEFORE removing cover to establish permanent wiring connection.
- Garage door installation and wiring MUST be in compliance with ALL local electrical and building codes.
- NEVER use an extension cord, 2-wire adapter or change plug in ANY way to make it fit outlet. Be sure the opener is grounded.

OPTION A: TYPICAL WIRING

1. Plug in the garage door opener into a grounded outlet.
2. DO NOT run garage door opener at this time.

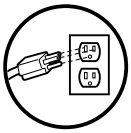

RIGHT

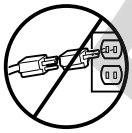

WRONG

OPTION B: PERMANENT WIRING CONNECTION

If permanent wiring is required by your local code, refer to the following procedure.

To make a permanent connection through the 7/8 inch hole in the back of the garage door opener (according to local code):

1. Be sure power is NOT connected to the opener, and disconnect power to circuit.
2. Remove the garage door opener from the torsion bar, remove cover screws and set the cover aside.
3. Cut the line cord 6" (15.2 cm) above the strain relief.
4. Squeeze the strain relief and push into motor unit, then remove the strain relief from the line cord.
5. Install a 90° conduit (not provided) or flex cable adapter (not provided) to the 7/8" hole. Reinstall garage door opener to torsion bar.
6. Run wires through conduit, cut to proper length and strip installation.
7. Strip 1/2" (1.3 cm) of insulation from the existing black, white and green wires.
8. Connect the line to the black wire and neutral to the white wire with wire nuts (not provided). Connect ground wire to the green ground screw.
9. Properly secure wires under plastic ties so that they do not come into contact with moving parts.
10. Reinstall cover.

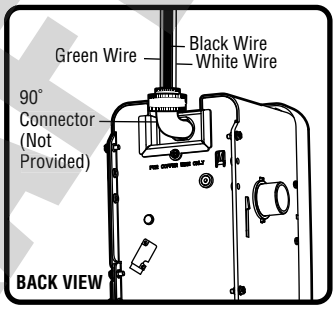

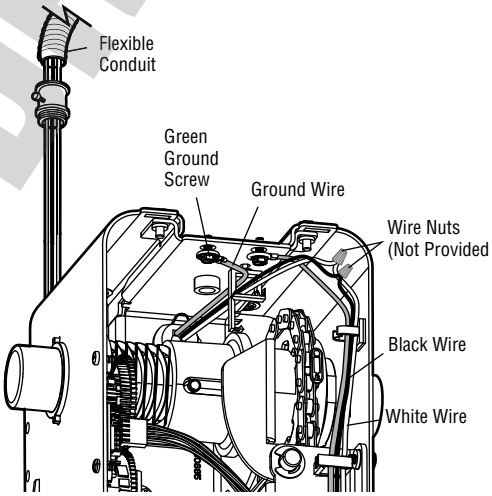

DRAFT 5

Installation

ENSURE THE SAFETY REVERSING SENSORS ARE ALIGNED

The door will not close if the sensors have not been installed and aligned correctly.

When the light beam is obstructed or misaligned while the door is closing, the door will reverse and the garage door opener lights will flash ten times. If the door is already open, it will not close. The sensors can be aligned by loosening the wing nuts, aligning the sensors, and tightening the wing nuts.

1. Check to make sure the LEDs in both sensors are glowing steadily. The LEDs in both sensors will glow steadily if they are aligned and wired correctly.

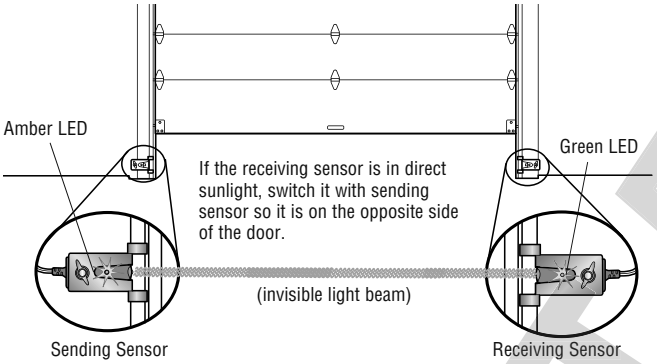

IF THE AMBER LED ON THE SENDING SENSOR IS NOT GLOWING:

- Make sure there is power to the garage door opener.
- Make sure the sensor wire is not shorted/broken.
- Make sure the sensor has been wired correctly: white wires to white terminal and white/black wires to grey terminal.

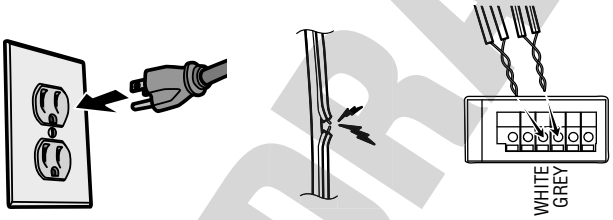

IF THE GREEN LED ON THE RECEIVING SENSOR IS NOT GLOWING:

- Make sure the sensor wire is not shorted/broken.
- Make sure the sensors are aligned.

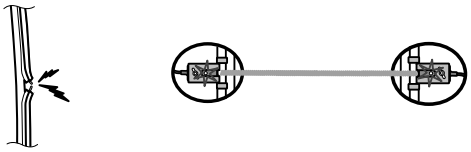

ENSURE THE DOOR CONTROL IS WIRED CORRECTLY

The yellow command LED and the red learn LED on the door control will blink quickly for up to 5 minutes as the door control recharges. When the door control is operational, the yellow command LED will glow steadily.

DRAFT 5

9 Install the Battery Backup

When in Battery Backup mode, MyQ® Smartphone Control and wireless MyQ devices will be disabled. In battery backup mode, the automatic garage door lock will unlock when the garage door is opened, and will remain disabled until power is restored.

1. Unplug the garage door opener.
2. Use a Phillips head screwdriver to remove the battery cover on the garage door opener.
3. Partially insert the battery into the battery compartment with the terminals facing out.
4. Connect red (+) and black (-) wires from the garage door opener to the corresponding terminals on the battery.
5. Replace the battery cover.
6. Plug in the garage door opener.

BATTERY STATUS LED

GREEN LED:

All systems are normal.

- A solid green LED light indicates the battery is fully charged.
- A flashing green LED indicates the battery is being charged.

ORANGE LED:

The garage door opener has lost power and is in battery backup mode.

- A solid orange LED with beep, sounding approximately every 2 seconds, indicates the garage door opener is operating on battery power.
- A flashing orange LED with beep, sounding every 30 seconds, indicates the battery is low.

RED LED:

The garage door opener's 12V battery needs to be replaced.

- A solid red LED with beep, sounding every 30 seconds, indicates the 12V battery will no longer hold a charge and needs to be replaced. Replace the battery back up to maintain the battery backup feature.

NOTE: *Battery does not have to be fully charged to operate the garage door opener.*

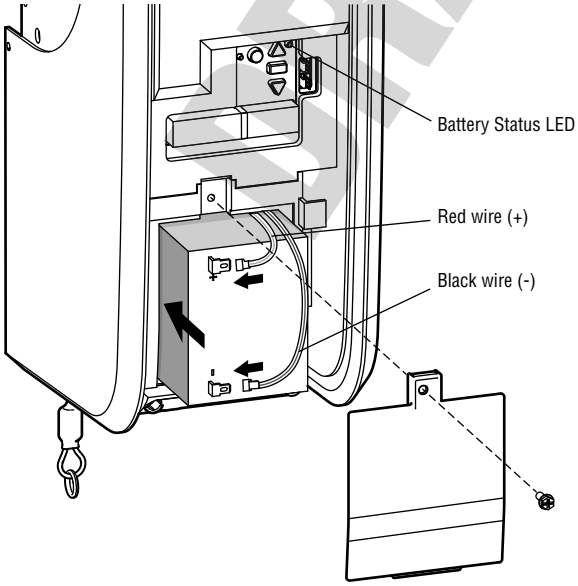

⚠ WARNING

To reduce the risk of FIRE or INJURY to persons:

- Disconnect ALL electric and battery power BEFORE performing ANY service or maintenance.
- Use ONLY LiftMaster part #485LM for replacement battery.
- DO NOT dispose of battery in fire. Battery may explode. Check with local codes for disposal instructions.

CAUTION

ALWAYS wear protective gloves and eye protection when changing the battery or working around the battery compartment.

DRAFT

Adjustment

1 Program the Travel

Travel limits regulate the points at which the door will stop when moving up or down.

While programming, the UP and DOWN buttons can be used to move the door as needed.

1. Press and hold the Adjustment Button until the UP Button begins to flash and/or a beep is heard.
2. Press and hold the UP Button until the door is in the desired UP position.
3. Once the door is in the desired UP position press and release the Adjustment Button. The garage door opener lights will flash twice and the DOWN Button will begin to flash.
4. Press and hold the DOWN Button until the door is in the desired DOWN position.
5. Once the door is in the desired DOWN position press and release the Adjustment Button. The garage door opener lights will flash twice and the UP Button will begin to flash.
6. Press and release the UP Button. When the door travels to the programmed UP position, the DOWN Button will begin to flash.
7. Press and release the DOWN Button. The door will travel to the programmed DOWN position. Programming is complete.

If the garage door opener lights are flashing 5 times during the steps for Program the Travel, the programming has timed out. If the cable tension monitor is not installed or is sensing too much slack in the cable, the garage door opener light will flash 5 times. Ensure the cable tension monitor is correctly installed then follow the steps for Program the Travel. If the garage door opener lights are flashing 10 times during the steps for Program the Travel, the safety reversing sensors are misaligned or obstructed (refer to page 18). When the sensors are aligned and unobstructed, cycle the door through a complete up and down cycle using the remote control or the UP and DOWN buttons. Programming is complete. If you are unable to operate the door up and down, repeat the steps for Programming the Travel.

⚠ AVERTISSEMENT

Without a properly installed safety reversal system, persons (particularly small children) could be SERIOUSLY INJURED or KILLED by a closing garage door.

- Incorrect adjustment of garage door travel limits will interfere with proper operation of safety reversal system.
- After ANY adjustments are made, the safety reversal system MUST be tested. Door MUST reverse on contact with 1-1/2" high (3.8 cm) object (or 2x4 laid flat) on floor.

ATTENTION

To prevent damage to vehicles, be sure fully open door provides adequate clearance.

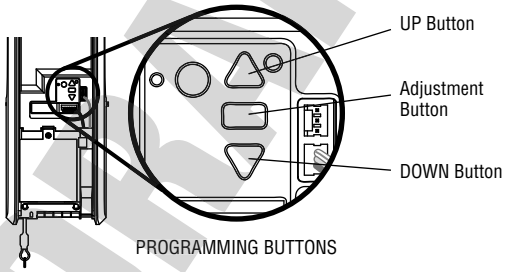

PROGRAMMING BUTTONS

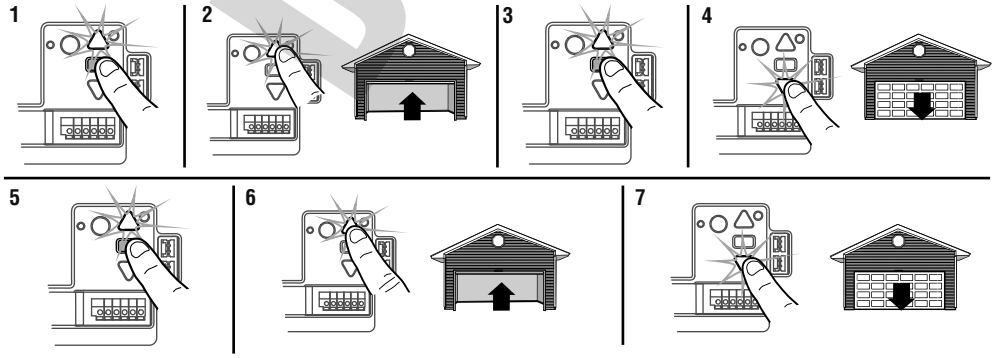

DRAFT

Adjustment

2 Test the Safety Reversal System

TEST

1. With the door fully open, place a 1-1/2 inch (3.8 cm) board (or a 2x4 laid flat) on the floor, centered under the garage door.
2. Press the remote control push button to close the door. The door MUST reverse when it makes contact with the board.

ADJUST

If the door stops but does not reverse:

1. Review the installation instructions provided to insure all steps were followed;
2. Repeat Program the Travel (see Adjustment Step 1);
3. Repeat the Safety Reversal test.

If the test continues to fail, call a trained door systems technician.

IMPORTANT SAFETY CHECK:

Test the Safety Reverse System after:

- Each adjustment of limits.
- Any repair to or adjustment of the door (including springs and hardware).
- Any repair to or buckling of the floor.
- Any repair to or adjustment of the garage door opener.

⚠ WARNING

Without a properly installed safety reversal system, persons (particularly small children) could be SERIOUSLY INJURED or KILLED by a closing garage door.

- Safety reversal system MUST be tested every month.
- After ANY adjustments are made, the safety reversal system MUST be tested. Door MUST reverse on contact with 1-1/2" (3.8 cm) high object (or 2x4 laid flat) on the floor.

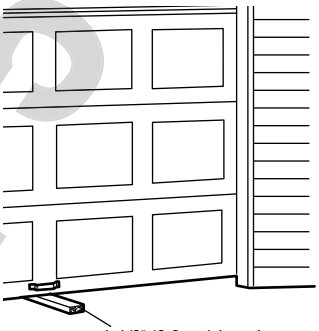

3 Test the Protector System®

1. Open the door. Place an obstruction in the path of the door.
2. Press the remote control push button to close the door. The door will not move more than an inch (2.5 cm), and the garage door opener lights will flash 10 times.

The garage door opener will not close from a remote control if the LED in either safety reversing sensor is off (alerting you to the fact that the sensor is misaligned or obstructed).

If the garage door opener closes the door when the safety reversing sensor is obstructed (and the sensors are no more than 6 inches [15 cm] above the floor), call for a trained door systems technician.

⚠ WARNING

Without a properly installed safety reversing sensor, persons (particularly small children) could be SERIOUSLY INJURED or KILLED by a closing garage door.

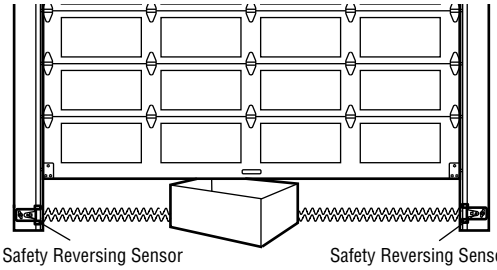

DRAFT 5

Adjustment

4 Test Cable Tension Monitor

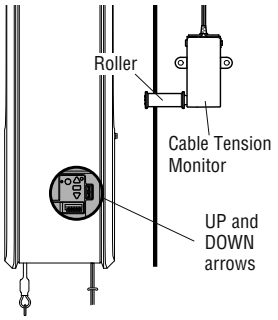

1. With the door fully closed, push on the front of the cable tension monitor. A click should be heard. If there is no click, the roller may be hitting the jamb and not allowing the switch to detect slack in the cable. Make sure the cable tension monitor is mounted flush with the wall and the roller is free from any obstructions.

If your cable tension monitor has been activated the UP and DOWN arrows will flash diagnostic code 3-5, see page 31.

5 Test Automatic Door Lock

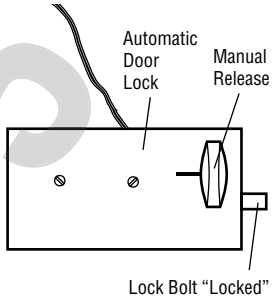

1. With the door fully closed, the automatic door lock bolt should be protruding through the track.
2. Operate the door in the open direction. The automatic door lock should retract before the door begins to move.
3. Operate the door in the down direction. When the door reaches the fully closed position, the automatic door lock should move into lock position to secure the door.

   NOTE: *If the automatic door lock does not function, the lock can be manually released by sliding the manual release handle to the open position.*

6 To Open the Door Manually

Disengage any door locks before proceeding. The door should be fully closed if possible. Pull down on the emergency release handle until a click noise is heard from the door opener and lift the door manually.

To reconnect the door to the door opener, pull the emergency release handle straight down a second time until a click noise is heard from the door opener. The door will reconnect on the next UP or DOWN operation.

TEST THE EMERGENCY RELEASE:

1. Make sure the door is closed.
2. Pull the emergency release handle. The door should then be able to be opened manually.
3. Return the door to the closed position.
4. Pull the emergency handle a second time.
5. Reconnect the door to the door opener.

⚠ WARNING

To prevent possible SERIOUS INJURY or DEATH from a falling garage door:

- If possible, use emergency release handle to disengage door ONLY when garage door is CLOSED. Weak or broken springs or unbalanced door could result in an open door falling rapidly and/or unexpectedly.
- NEVER use emergency release handle unless garage doorway is clear of persons and obstructions.

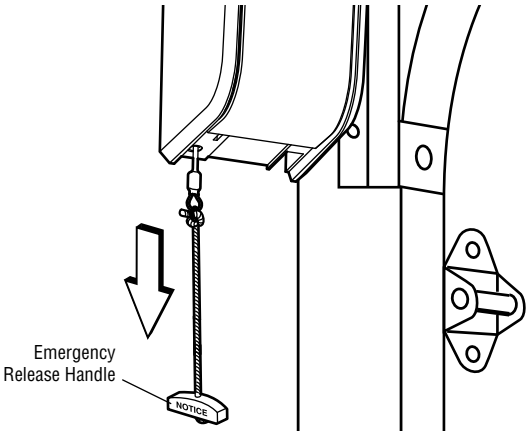

DRAFT 5

IMPORTANT SAFETY INSTRUCTIONS

⚠⚠ WARNING

To reduce the risk of SEVERE INJURY or DEATH:

1. Read and follow all warnings and instructions.
2. ALWAYS keep remote controls out of reach of children. NEVER permit children to operate or play with garage door control push buttons or remote controls.
3. ONLY activate garage door when it can be seen clearly, it is properly adjusted, and there are no obstructions to door travel.
4. ALWAYS keep garage door in sight and away from people and objects until completely closed. NO ONE SHOULD CROSS THE PATH OF THE MOVING DOOR.
5. NO ONE SHOULD GO UNDER A STOPPED, PARTIALLY OPENED DOOR.
6. If possible, use emergency release handle to disengage trolley ONLY when garage door is CLOSED. Use caution when using this release with the door open. Weak or broken springs or unbalanced door could result in an open door falling rapidly and/or unexpectedly and increasing the risk of SEVERE INJURY or DEATH.
7. NEVER use emergency release handle unless garage doorway is clear of persons and obstructions.
8. NEVER use emergency release handle to pull garage door open or closed. If rope knot becomes untied, you could fall.
9. After ANY adjustments are made, the safety reversal system MUST be tested.
10. Safety reversal system MUST be tested every month. Garage door MUST reverse on contact with 1-1/2" high (3.8 cm) object (or a 2x4 laid flat) on the floor. Failure to adjust the garage door opener properly increases the risk of SEVERE INJURY or DEATH.
11. ALWAYS KEEP GARAGE DOOR PROPERLY BALANCED. An improperly balanced door may NOT reverse when required and could result in SEVERE INJURY or DEATH.
12. ALL repairs to cables, spring assemblies and other hardware, ALL of which are under EXTREME tension, MUST be made by a trained door systems technician.
13. ALWAYS disconnect electric power to garage door opener BEFORE making ANY repairs or removing covers.
14. This garage door opener system is equipped with an unattended operation feature. The door could move unexpectedly. NO ONE SHOULD CROSS THE PATH OF THE MOVING DOOR.
15. **SAVE THESE INSTRUCTIONS.**

DRAFT

Operation

Using Your Garage Door Opener

FEATURES

Your garage door opener is equipped with features to provide you with greater control over your garage door operation.

Alert2Close

The Alert2Close feature provides a visual and an audible alert that an unattended door is closing.

TIMER-TO-CLOSE (TTC)

The TTC feature automatically closes the door after a specified time period that can be adjusted using a TTC enabled door control (Models 881LMW or 880LMW). Prior to and during the door closing the garage door opener lights will flash and the garage door opener will beep.

MyQ®

MyQ allows you to control your garage door opener from your mobile device or computer from anywhere. MyQ technology uses a 900Mhz signal to provide two way communication between the garage door opener and MyQ enabled accessories. The garage door opener has an internal gateway that allows the garage door opener to communicate directly with a home Wi-Fi® network and access your MyQ account.

THE PROTECTOR SYSTEM® (SAFETY REVERSING SENSORS)

When properly connected and aligned, the safety reversing sensors will detect an obstruction in the path of the infrared beam. If an obstruction breaks the infrared beam while the door is closing, the door will stop and reverse to full open position, and the opener lights will flash 10 times. If the door is fully open, and the safety reversing sensors are not installed, or are misaligned, the door will not close from a remote control. However, you can close the door if you hold the button on the door control or keyless entry until the door is fully closed. The safety reversing sensors do not affect the opening cycle. For more information see page 21.

ENERGY CONSERVATION

For energy efficiency the garage door opener will enter sleep mode when the door is fully closed. The sleep mode shuts the garage door opener down until activated. The sleep mode is sequenced with the garage door opener light; as the light turns off the sensor LEDs will turn off and whenever the garage door opener lights turn on the sensor LEDs will light. The garage door opener will not go into the sleep mode until the garage door opener has completed 5 cycles upon power up.

MEMORY CAPACITY

SECURITY+ 2.0® ACCESSORIES	MEMORY CAPACITY
Remote Controls	Up to 40
Door Controls	Up to 2 Smart Control Panels or 4 of any other Security+ 2.0® door controls
Keyless Entries	Up to 4
MyQ® Acccessories	Up to 16

LIGHTS

The garage door opener light will turn on when the opener is initially plugged in; power is restored after interruption, or when the garage door opener is activated. The light will turn off automatically after 4-1/2 minutes.

Light Feature

The garage door opener is equipped with an added feature; the lights will turn on when someone enters through the open garage door and the safety reversing sensor infrared beam is broken. For added control over the light on your garage door opener, see page 27.

USING YOUR GARAGE DOOR OPENER

The garage door opener can be activated through a wall-mounted door control, remote control, wireless keyless entry or MyQ® accessory. When the door is closed and the garage door opener is activated the door will open. If the door senses an obstruction or is interrupted while opening the door will stop. When the door is in any position other than closed and the garage door opener is activated the door will close. If the garage door opener senses an obstruction while closing, the door will reverse. If the obstruction interrupts the sensor beam the garage door opener lights will blink 10 times. However, you can close the door if you hold the button on the door control or keyless entry until the door is fully closed. The safety reversing sensors do not affect the opening cycle. The safety reversing sensor must be connected and aligned correctly before the garage door opener will move in the down direction.

BATTERY BACKUP

The battery backup system allows access in and out of your garage, even when the power is out. When the garage door opener is operating on battery power, the garage door opener will run slower, the light will not function, the Battery Status LED will glow solid orange, and a beep will sound approximately every 2 seconds.

DRAFT

Operation

Connect With Your Smartphone

The Wi-Fi® Garage Door Opener is compatible with up to 16 MyQ enabled accessories. Up to 10 devices can be paired to the Wi-Fi garage door opener's internal gateway. These devices can be controlled with the MyQ app. These devices include any combination of MyQ garage door openers, Wi-Fi garage door openers, MyQ light controls, MyQ gate operators or MyQ commercial door operators. A LiftMaster Internet Gateway (828LM) can be added if you need to control more than 10 devices using the MyQ app. Up to 6 devices can be paired to garage door opener itself (controlled by garage door opener through 900MHz). These devices include any combination of MyQ light controls or a garage door and gate monitor.

You will need:

- Wi-Fi enabled smartphone, tablet or laptop
- Broadband Internet Connection
- Wi-Fi signal in the garage **(2.4 Ghz, 802.11b/g/n required)**, see page 4
- Password for your home network (router's main account, not guest network)
- MyQ® serial number located on the garage door opener

SYNCHRONIZE THE DOOR CONTROL

To synchronize the door control to the garage door opener, press the push bar until the garage door opener activates (it may take up to 3 presses).The garage door opener must run through a complete cycle before it will activate Wi-Fi® programming.

CONNECT YOUR GARAGE DOOR OPENER TO YOUR HOME WI-FI NETWORK

1. Use the Smart Control Panel®, go to Menu > Program > Wi-Fi Setup **OR** press and release the yellow LEARN button on the garage door opener 3 times. The garage door opener will beep once. You have 20 minutes to complete the connection process.
2. On your mobile device, go to Settings > Wi-Fi and select the network with the "MyQ-" prefix.
3. Launch the web browser on your smartphone or tablet. Enter **setup.myqdevice.com** into the browser address bar. Follow the on screen prompts to connect the garage door opener to your Wi-Fi network. The MyQ serial number will display on screen.

   Write the serial number in the space below.

4. Download the MyQ app from the App Store® or Google Play™ store. Sign up for your MyQ account and add the MyQ serial number to your account.

To add a second Wi-Fi garage door opener, repeat steps 1-3. Add the second MyQ serial number to your account in the MyQ app.

LED	Definition
Blue	**Off** - Wi-Fi is not turned on. **Blinking** - Garage door opener is in Wi-Fi learn mode. **Solid** - Mobile device connected to the garage door opener.
Blue and Green	**Blinking** - Attempting to connect to router.
Green	**Blinking** - Attempting to connect to the Internet server. **Solid** - Wi-Fi has been set up and garage door opener is connected to the Internet.

NOTES:
The MyQ® Smartphone Control WILL NOT work if the garage door opener is operating on battery power.

To erase the Wi-Fi settings, see page 29.

If you need help adding devices to your MyQ account, or to learn more go to WiFiHelp.LiftMaster.com.

DRAFT 5

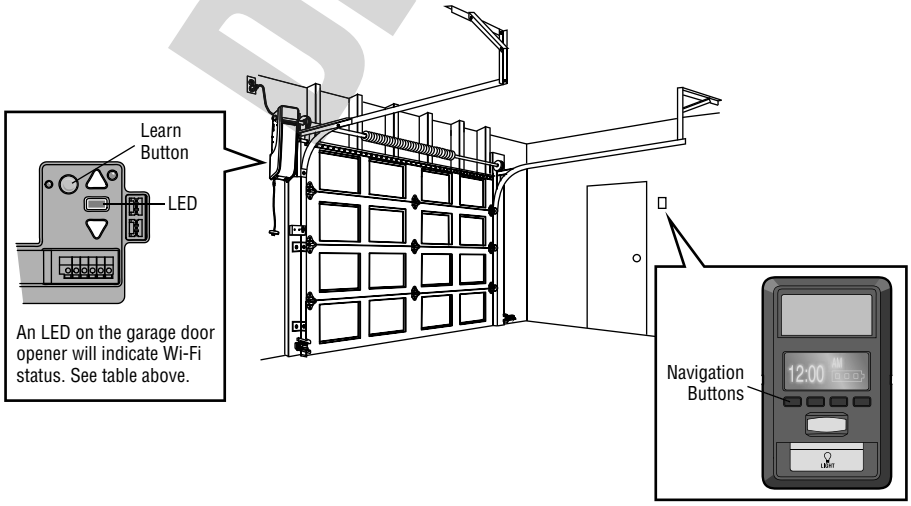

Operation

Using the Door Control

SYNCHRONIZE THE DOOR CONTROL
To synchronize the door control to the garage door opener, press the push bar until the garage door opener activates (it may take up to 3 presses). Test the door control by pressing the push bar, each press of the push bar will activate the garage door opener.

Up to 2 Smart Control Panels® or 4 of any other Security+ 2.0® door controls can be connected to the garage door opener.

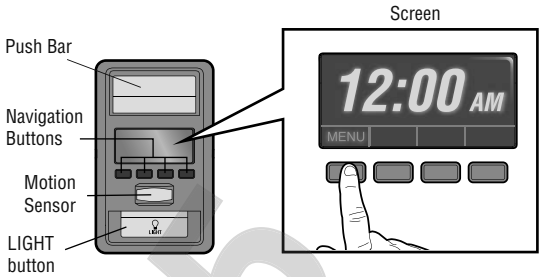

PUSH BAR
Press the push bar to open or close the door.

NAVIGATION BUTTONS
Use the navigation buttons to make selections and program features.

LIGHT BUTTON
Press the LIGHT button to turn the garage door opener lights on or off. When the lights are turned on they will stay on until the LIGHT button is pressed again, or until the garage door opener is activated. Once the garage door opener is activated the lights will turn off after the specified period of time (the factory setting is 4-1/2 minutes). The LIGHT button will not control the lights when the door is in motion.

SCREEN
The screen will display the time and temperature until the menu button is pressed, and then it will display the menu options. If there is a problem with the garage door opener the screen will display the Diagnostic Code. Refer to the Troubleshooting section.

The following features are accessible through the screen using the navigation buttons:

LEARN A DEVICE
Any compatible remote controls, wireless keyless entry, Wi-Fi garage door openers, or MyQ® accessories can be programmed to the garage door opener by accessing the menu and using the navigation buttons.

LOCK
The LOCK feature is designed to prevent activation of the garage door opener from remote controls while still allowing activation from the door control and keyless entry. This feature is useful for added peace of mind when the home is empty (i.e. vacation).

TIMER-TO-CLOSE (TTC)
DO NOT enable TTC if operating a one-piece door. TTC is to be used ONLY with sectional doors. Factory default is set to off. TTC can be set to automatically close your garage door from the fully open position after a specified period of time (1, 5, 10 minute intervals or a custom setting up to 99 minutes). The garage door opener will beep and the lights will flash before closing the door. The screen on the door control can display the status of the TTC. TTC WILL NOT work if the garage door opener is operating by battery power or if the safety reversing sensors are misaligned. This feature is NOT intended to be the primary method of closing the door. **A keyless entry should be installed in the event of an accidental lock out when using this feature.**
NOTE*: Before enabling the TTC for the first time, or if you experience a power outage, cycle the garage door opener open and closed to allow the TTC to set.*

AUTOMATIC LIGHT

Motion Sensor
Factory default is set to on. This feature automatically turns on the garage door opener lights when motion is sensed. The lights will come on for the set period of time, then shut off. If using the garage door opener light as a work light disable the motion sensor, otherwise the light will turn off automatically if you are beyond the range of the sensor.

Light Feature
The lights will turn on when someone enters through the open garage door and the safety reversing sensor infrared beam is broken.

MAINTENANCE ALERT (MAS)
This feature assists the homeowner in ensuring the garage door opener system stays in good working condition. When the garage door opener needs to be serviced (approximately 4500 garage door opener cycles) the command (yellow) and service (red) LEDs will begin to alternately flash back and forth. The factory setting for the MAS feature is off and can be activated at time of installation. Contact your installing dealer for service.

DRAFT 5

Operation

SETUP

The features on the door control can be programmed through a series of menus on the screen and the navigation buttons. Refer to the descriptions below.

SCREEN

The main screen displays the time, temperature, and current battery charge (if applicable)

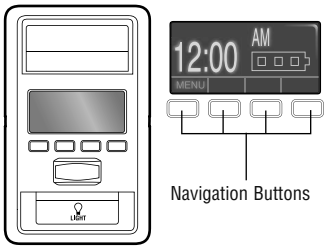

FEATURES

Press the navigation button below "MENU" to view the Features menu.

- CLOCK SETUP: Set the time, choose 12 or 24 hour clock and show/hide clock.
- TTC OFF: For sectional doors ONLY. Set the Timer-to-Close feature off/on and set the time interval before door closes. ***NOTE:*** *DO NOT enable TTC if operating a one-piece door. TTC is to be used ONLY with sectional doors.*
- LOCK DISABLED: Enable/disable lock.
- PROGRAM: Set up Wi-Fi*, add remote controls, MyQ® devices, an extra remote button to control your garage door opener lights, or a keyless entry.
  * The garage door opener must run through a complete cycle before it will activate Wi-Fi® programming. For help related to Wi-Fi, visit WiFiHelp.LiftMaster.com.

SETTINGS

Press the navigation button below the down arrow till you see TEMPERATURE to view the Settings menu.

- TEMPERATURE: Display the temperature in Fahrenheit or Celsius and show/hide the temperature.
- LANGUAGE ENGLISH: Select a language.
- LIGHT SETTINGS: Set duration for garage door opener light to stay on after operation, selectable range of 1-1/2 to 4-1/2 minutes. Turn the Motion sensor off/on, and turn the entry light feature off/on.
- CONTRAST ADJUST 50: Adjust the contrast of the screen.

SERVICE

Press and hold the LIGHT button, then press the second navigation button to view the Service menu.

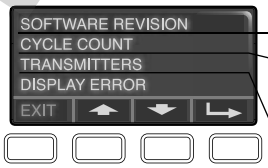

- SOFTWARE REVISION: Displays software version information.
- CYCLE COUNT: Turn the Maintenance Alert (MAS) on/off.
- TRANSMITTERS: Displays the number of remote controls, MyQ® devices, door controls and keyless entries currently programmed to operate the garage door opener.
- DISPLAY ERROR: Displays any errors that have occurred.

To program a remote control or keyless entry to the garage door opener using the door control, see page 28.

DRAFT

Programming

893MAX Remote Control

Your remote control has been programmed at the factory to operate with your garage door opener. If the remote does not work or you would like to program additional devices, follow the programming steps below.

Up to 40 Security+ 2.0® remote controls can be programmed to the garage door opener. Older LiftMaster remote controls are NOT compatible, see page 36 for compatible accessories. Programming can be done through the door control or the learn button on the garage door opener. To program additional accessories refer to the instructions provided with the accessory or visit LiftMaster.com. If your vehicle is equipped with a Homelink®, you may require an external adapter depending on the make, model, and year of your vehicle. Visit www.homelink.com for additional information.

TO ADD, REPROGRAM, OR CHANGE A 893MAX REMOTE CONTROL/877LM KEYLESS ENTRY PIN USING THE DOOR CONTROL

1. Press the navigation button below "MENU" to view the Features menu.
2. Use the navigation buttons to scroll to "PROGRAM".
3. Select "REMOTE" or "KEYPAD" to program from the program menu.
4. **Remote Control:** Press the button on the remote control that you wish to operate your garage door.

   Keyless Entry: Enter a 4-digit personal identification number (PIN) of your choice on the keyless entry keypad. Then press the ENTER button.

The garage door opener lights will flash (or two clicks will be heard) when the code has been programmed. Repeat the steps above for programming additional remote controls or keyless entry devices. If programming is unsuccessful, program the remote using the learn button.

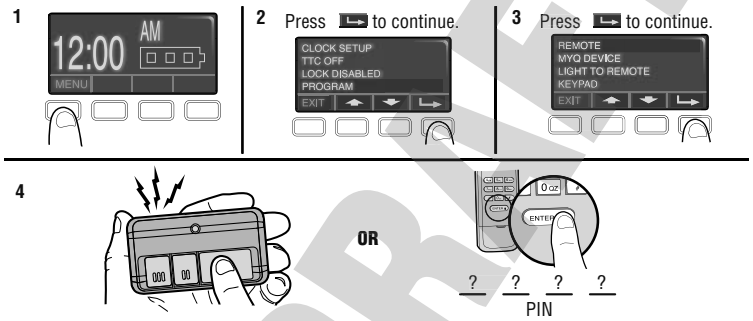

PROGRAM A 893MAX REMOTE CONTROL USING THE LEARN BUTTON ON THE GARAGE DOOR OPENER

1. Press and hold the program button on the remote control until the LED on the front of the remote control turns on.
2. Press and release the remote control button you wish to use and then press any other button to exit programming.
3. Press and release the Learn button on the garage door opener. The Learn LED will light. Within 30 seconds...
4. Press the remote control button programmed in step 2 until the garage door opener light flashes or two clicks are heard.

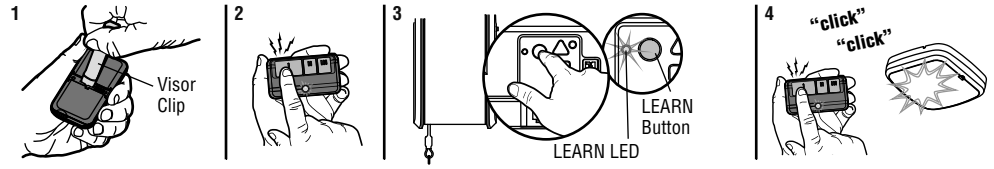

To program other types of remote controls or keyless entries see the instructions included with the device or visit LiftMaster.com.

DRAFT 5

Programming

Program the MyQ® LED Remote Light

Your garage door opener remote light has already been programmed at the factory to operate with your opener. Any additional or replacement remote lights will need to be programmed.

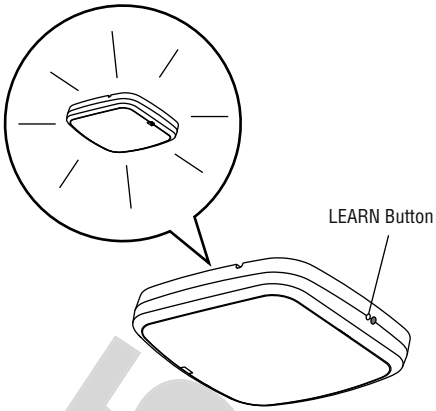

PROGRAM A DOOR OPENER TO THE MyQ LED REMOTE LIGHT

1. Press the LEARN button on the light until the green LED comes ON.
2. Press the LEARN button on the door opener. ***OR***
   On the Smart Control Panel® go to Menu > Program > MyQ Device.
3. The code has been programmed when the remote light blinks once.

PROGRAM A REMOTE CONTROL TO THE MyQ LED REMOTE LIGHT

1. Press the LEARN button on the light until the LED comes ON.
2. Press the button on the remote control that you wish to operate the light.
3. The code has been programmed when the remote light blinks once.

To program the light with other accessories, refer to the manual for your accessory.

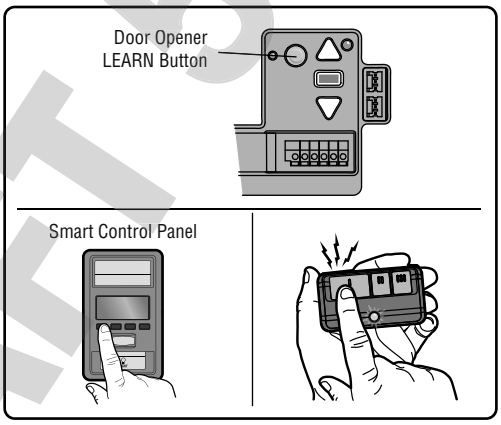

ADD THE MyQ LED REMOTE LIGHT TO MyQ ACCOUNT

1. Press the LEARN button on the light until the LED comes ON.
2. Login to the MyQ app and add the MyQ LED Remote Light.

TO ERASE ALL PROGRAMMING FROM THE MyQ LED REMOTE LIGHT

1. Press and hold the LEARN button until the LED turns off (6-10 seconds). All programming is now erased.

To Erase the Memory

ERASE ALL REMOTE CONTROLS AND KEYLESS ENTRIES

1. Press and hold the LEARN button on garage door opener until the learn LED goes out (approximately 6 seconds). All remote control and keyless entry codes are now erased. Reprogram any accessory you wish to use.

ERASE ALL DEVICES (Including MyQ enabled accessories)

1. Press and hold the LEARN button on garage door opener until the learn LED goes out (approximately 6 seconds).
2. Immediately press and hold the LEARN button again until the learn LED goes out. All codes are now erased. Reprogram any accessory you wish to use.

ERASE THE WI-FI NETWORK FROM THE GARAGE DOOR OPENER

1. Press and hold the black adjustment button on the garage door opener until 3 beeps are heard (Approximately 6 seconds).

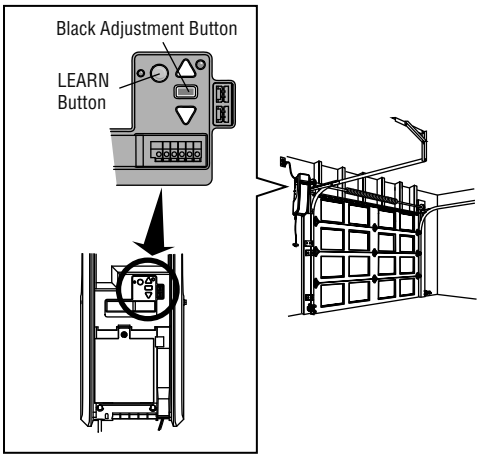

ERASE A MyQ ACCOUNT

Go to myLiftMaster.com to delete your MyQ account. LEARN Button

DRAFT 5

Maintenance

Care of Your Garage Door Opener

MAINTENANCE SCHEDULE

EVERY MONTH

- Manually operate door. If it is unbalanced or binding, call a trained door systems technician.
- Check to be sure door opens and closes fully. Adjust limits if necessary (see Adjustment Step 1).
- Repeat the safety reverse test. Make any necessary adjustments (see Adjustment Step 2).

EVERY YEAR

- Oil door rollers, bearings and hinges. The garage door opener does not require additional lubrication. Do not grease the door tracks.

EVERY TWO TO THREE YEARS

- Use a rag to wipe away the existing grease from the garage door opener rail. Reapply a small layer of white lithium grease to the top and underside of the rail surface where the trolley slides.

MyQ LED Remote Light

- Unplug the light before cleaning.
- Use a lightly dampened cloth for cleaning.
- DO NOT use liquid cleaners on the light lens.

DRAFT 5

THE REMOTE CONTROL BATTERY

The LED(s) on your remote control will stop flashing when the battery is low and needs to be replaced. To replace battery, open the case as shown. Insert battery positive side up (+). Replace the battery with only 3V CR2032 coin cell batteries. Dispose of old battery properly.

Pry open the case first in the middle (1), then at each side (2 and 3) with the visor clip.

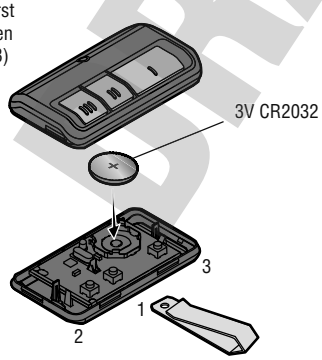

⚠ WARNING

To prevent possible SERIOUS INJURY or DEATH:

- NEVER allow small children near batteries.
- If battery is swallowed, immediately notify doctor.

To reduce risk of fire, explosion or chemical burn:

- Replace ONLY with 3V CR2032 coin batteries.
- DO NOT recharge, disassemble, heat above 212° F (100° C) or incinerate.

Troubleshooting

Diagnostic Chart

Your garage door opener is programmed with self-diagnostic capabilities. The UP and DOWN arrows on the garage door opener flash the diagnostic codes.

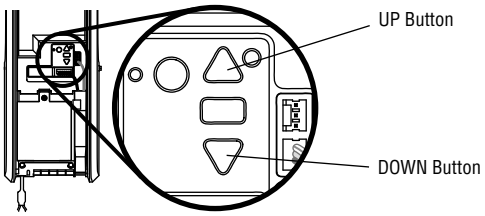

DIAGNOSTIC CODE		SYMPTOM	SOLUTION
Up Arrow Flash(es)	Down Arrow Flash(es)		
1	1	The garage door opener will not close and the light flashes.	Safety sensors are not installed, connected or wires may be cut. Inspect sensor wires for a disconnected or cut wire.
1	2	The garage door opener will not close and the light flashes.	There is a short or reversed wire for the safety sensors. Inspect safety sensor wire at all staple points and connection points and replace wire or correct as needed.
1	3	The door control will not function.	The wires for the door control are shorted or the door control is faulty. Inspect door control wires at all staple points and connection points and replace wire or correct as needed.
1	4	The garage door opener will not close and the light flashes.	Safety sensors are misaligned or were momentarily obstructed. Realign both sensors to ensure both LEDs are steady and not flickering. Make sure nothing is hanging or mounted on the door that would interrupt the sensors path while closing.
1	5	Door moves 6-8" (15-20 cm) stops or reverses.	Manually open and close the door. Check for binding or obstructions, such as a broken spring or door lock, correct as needed. Check wiring connections at travel module and at the logic board. Replace travel module if necessary.
		No movement, only a single click.	Manually open and close the door. Check for binding or obstructions, such as a broken spring or door lock, correct as needed. Replace logic board if necessary.
		Opener hums for 1-2 seconds no movement.	Manually open and close the door. Check for binding or obstructions, such as a broken spring or door lock, correct as needed. Replace motor if necessary.
1	6	Door coast after it has come to a complete stop.	Program travel to coasting position or have door balanced by a trained technician.
2	1-5	No movement or sound.	Replace logic board.
3	1	The garage door opener moves slightly, then stops	Activate the garage door opener again. If problem persists, replace logic board.
3	3	The battery status LED is constantly flashing green.	Battery backup charging circuit error, replace logic board.
3	5	The garage door opener will not close or door reverses during travel.	If two cable tension monitors were previously installed and one has been removed, unplug and plug in the opener three times to relearn the monitor to the opener.
4	1-4	Door is moving stops and or reverses.	Manually open and close the door. Check for binding or obstructions, such as a broken spring or door lock, correct as needed. If the door is binding or sticking contact a trained door systems technician. If door is not binding or sticking attempt to reprogram travel.
4	5	Opener runs approximately 6-8" (15-20 cm), stops and reverses.	Communication error to travel module. Check travel module connections, replace module if necessary.
4	6	The garage door opener will not close and the light flashes.	Safety sensors are misaligned or were momentarily obstructed. Realign both sensors to ensure both LEDs are steady and not flickering. Make sure nothing is hanging or mounted on the door that would interrupt the sensor's path while closing.
5	5	The door will not close when using Timer-to-Close or MyQ Smartphone Control	MyQ Remote LED Light must be installed to use TTC or MyQ to control the door. Plug in the MyQ Remote LED Light and make sure it is programmed to the garage door opener.

DRAFT

Troubleshooting

Additional Troubleshooting

The garage door opener doesn't operate from either the door control or the remote control:

- Does the garage door opener have electric power? Plug a lamp into the outlet. If it doesn't light, check the fuse box or the circuit breaker. (Some outlets are controlled by a wall switch.)
- Have you disabled all door locks? Review installation instruction warnings on page 8.
- Are the wiring connections correct? Review Installation Step 5.
- Is there a build-up of ice or snow under the door? The door may be frozen to the ground. Remove any restriction.
- The garage door spring may be broken. Have it replaced (see page 3 for reference).

The door opener operates from the single button control station, but not from a remote control:

- Reprogram the remote control and replace the battery if necessary. Repeat with all remote controls.

The door opens and closes by itself:

- Be sure that all remote control push buttons are off.
- Remove the bell wire from the single button control station terminals and operate from the remote only. If this solves the problem, the single button control station is faulty, or there is an intermittent short in the wire. Replace the control station.
- Erase the memory and reprogram all remote controls (refer to the instructions provided with the remote control or visit LiftMaster.com).

My remote control will not activate the garage door:

- Verify the lock feature is not activated on the door control.
- Reprogram the remote control.
- If the remote control will still not activate the door check the diagnostic codes to ensure the garage door opener is working properly.

The remote control has short range:

- Change the location of the remote control in your car.
- Some installations may have shorter range due to a metal door, foil backed insulation, or metal garage siding.

The door doesn't open completely:

- Check power door lock.
- Is something obstructing the door? Is it out of balance, or are the springs broken? Remove the obstruction or repair the door.

The door opens but won't close:

- Check that cable tension monitor is correctly installed. If a second cable tension monitor has been removed, follow the instructions to relearn a single cable tension monitor (See Installation Step 4).
- The safety reversing sensor must be connected and aligned correctly before the door opener will move in the down direction. If you are able to close the door using constant pressure, verify the safety reversing sensors are properly installed, aligned and free of any obstructions (see page 14).
- If the garage door opener lights blink, check the safety reversing sensors (see page 18).
- If the garage door opener lights don’t blink and it is a new installation see Adjustment Step 1. For an existing installation, see below.

Repeat the safety reverse test after the adjustment is complete.

The door reverses for no apparent reason and garage door opener lights don’t blink:

- Check that cable tension monitor is correctly installed. If a second cable tension monitor has been removed, follow the instructions to relearn a single cable tension monitor (See Installation Step 4).
- Is something obstructing the door? Pull the emergency release handle. Operate the door manually. If it is unbalanced or binding, call a trained door systems technician.
- Clear any ice or snow from the garage floor area where the door closes.
- Review Adjustment Step 1.

Repeat safety reverse test after adjustments.

My door will not close and the light blinks:

The safety reversing sensor must be connected and aligned correctly before the garage door opener will move in the down direction.

- Verify the safety sensors are properly installed, aligned and free of any obstructions.

The garage door opener strains to operate door:

- The door may be out of balance or the springs may be broken. Close the door and use the emergency release handle to disconnect the door. Open and close the door manually. A properly balanced door will stay in any point of travel while being supported entirely by its springs. If it does not, disconnect the garage door opener and call a trained door systems technician.

The garage door opener motor hums briefly, then won't work:

- The garage door springs may be broken. See above.
- If the problem occurs on the first operation of the garage door opener, door may be locked. Disable the power door lock.

DRAFT 5

Troubleshooting

Additional Troubleshooting (Continued)

The garage door opener won't operate due to power failure:

- Manually open the power door lock.
- Use the emergency release handle to disconnect the door. The door can be opened and closed manually. When power is restored, pull manual release a second time.
- When in Battery Backup mode, the opener should be able to operate up to 20 times.
- Disable any door locks. Use the emergency release handle to disconnect the door. The door can be opened and closed manually. When power is restored, pull manual release a second time.
- When in battery backup mode, battery power will last for 30 hours or up to 20 cycles over a 24 hour period.

Door loses limits:

- Collar not tightened securely. Tighten collar and reprogram limits (see Adjustment Step 1).

The garage door opener moves when the door is in operation:

- Some minor movement is normal for this product. If it is excessive the collar will wear prematurely.
- Check to make sure the torsion bar is not moving left/right excessively.
- Check to make sure the torsion bar is not visibly moving up and down as it rotates.
- Check that the opener is mounted at a right angle to the jackshaft. If not, move the position of the mounting bracket.

Automatic door lock connector will not fit the door opener plug:

Older model 24V door locks are incompatible. Use automatic door lock model 841LM, see Accessories page

Automatic garage door lock does not activate when garage door opens or closes:

In battery backup mode, the automatic garage door lock will unlock when the garage door is opened, and will remain disabled until power is restored.

The door opener is beeping:

- Indicates unattended closure. The opener has been activated by the MyQ App or the Garage and Gate Monitor.
- A solid orange LED with beep, sounding approximately every 2 seconds, indicates the door opener is operating on battery power.
- A flashing orange LED with beep, sounding every 30 seconds, indicates the battery is low.
- A solid red LED with beep, sounding every 30 seconds, indicates the 12V battery will no longer hold a charge and needs to be replaced.

The garage door is beeping and the red LED is flashing:

The battery charge is low or the battery is dead.

- Replace the battery.

MyQ® Smartphone Control, wireless MyQ® devices, and Timer-To-Close will not work:

- When in Battery Backup mode, MyQ® Smartphone Control, wireless MyQ® devices and Timer-To-Close will be disabled.
- MyQ Remote LED Light must be installed to enable use of Timer-to-Close or MyQ Smartphone Control of the door. Plug in the MyQ Remote LED Light and make sure it is programmed to the garage door opener. It may take up to 5 minutes to enable Timer-to-Close and MyQ Smartphone Control.

DRAFT 5

NOTICE: This device complies with Part 15 of the FCC rules and Industry Canada's license-exempt RSSs. Operation is subject to the following two conditions: (1) this device may not cause harmful interference, and (2) this device must accept any interference received, including interference that may cause undesired operation.

Any changes or modifications not expressly approved by the party responsible for compliance could void the user's authority to operate the equipment.

This device must be installed to ensure a minimum 20 cm (8 in.) distance is maintained between users/bystanders and device.

This device has been tested and found to comply with the limits for a Class B digital device, pursuant to part 15 of the FCC rules and Industry Canada ICES standard. These limits are designed to provide reasonable protection against harmful interference in a residential installation. This equipment generates, uses and can radiate radio frequency energy and, if not installed and used in accordance with the instructions, may cause harmful interference to radio communications. However, there is no guarantee that interference will not occur in a particular installation. If this equipment does cause harmful interference to radio or television reception, which can be determined by turning the equipment off and on, the user is encouraged to try to correct the interference by one or more of the following measures:

- Reorient or relocate the receiving antenna.
- Increase the separation between the equipment and receiver.
- Connect the equipment into an outlet on a circuit different from that to which the receiver is connected.
- Consult the dealer or an experienced radio/TV technician for help.

Repair Parts

Installation Parts

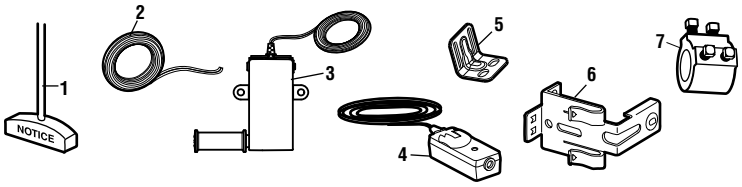

KEY NO.	PART NO.	DESCRIPTION	KEY NO.	PART NO.	DESCRIPTION
1	041A4582	Emergency release rope and handle assembly	5	041C0902	Mounting bracket
			6	41A5266-1	Safety reversing sensor brackets (2)
2	041B4494-1	2-Conductor bell wire - white and white/red	7	041D8615	Collar with set screws
					NOT SHOWN
3	041A6104	Cable tension monitor		114A5061	User's Guide
4	041A5034	Safety Reversing Sensor kit (receiving and sending sensors) with 2-conductor bell wire attached		114A5075	Quick Start Guide

DRAFT 5

Repair Parts

Garage Door Opener Assembly Parts

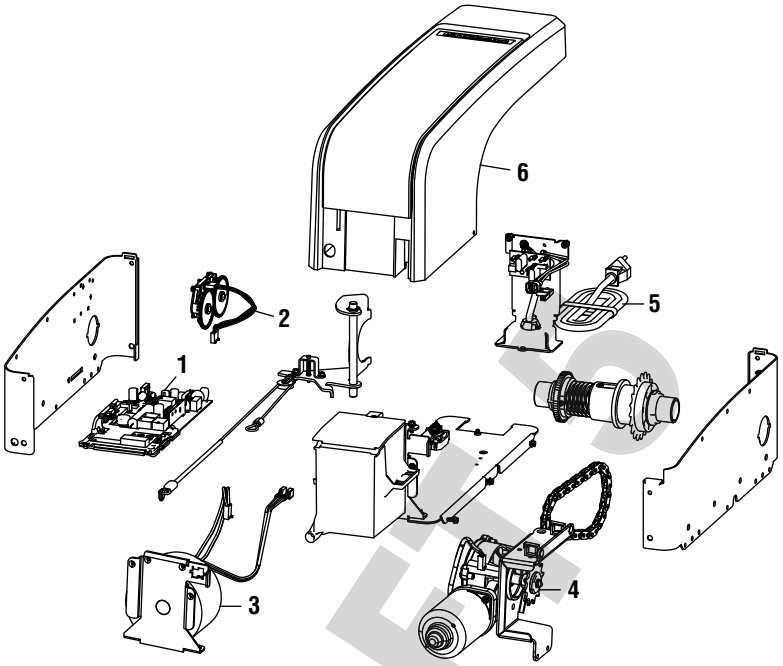

KEY NO.	PART NO.	DESCRIPTION	KEY NO.	PART NO.	DESCRIPTION
1	050DCRJWF	Logic Board	5	041D0190	Power cord
2	041B8861	Travel Module with Wire Harness	6	041D9042	Cover
3	041C0296	Transformer			**NOT SHOWN**
4	041D1624-2	Motor		041D9044	Battery Door and Logic Board Door

DRAFTS

Contact Information

STOP!

This garage door opener WILL NOT work until the safety reversing sensors are properly installed and aligned.

Address repair parts order to:
LiftMaster
6050 S. Country Club Rd.
Tucson, AZ 85706

For installation and service information call:
1-800-528-9131
Or visit us online at:
LiftMaster.com

Before calling, please have the model number of the garage door opener. If you are calling about a troubleshooting issue, it is recommended that you have access to your garage door opener while calling. If you are ordering a repair part please have the following information: part number, part name, and model number.

Accessories

MAX ACCESSORIES

Compatible with LiftMaster® garage door openers manufactured since 1993.

877MAX

Wireless Keyless Entry:

For use outside of the home to enable access to the garage using a 4-digit PIN.

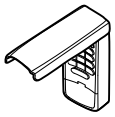

374UT

Mini Universal Remote Control:

The Mini Universal Remote Control can be programmed to activate up to two products, such as a garage door opener, MyQ® light controls, gate operator, or commercial door operator.

893MAX

3-Button MAX Remote Control:

Includes visor clip.

MYQ® ACCESSORIES

823LM

Remote Light Switch:

Automatically control your lights using your garage door opener, a Security+ 2.0® remote control or a LiftMaster® Internet Gateway. Simply replaces your current wired wall switch.

829LM

Garage Door and Gate Monitor:

Monitor open/closed status for up to 4 MyQ® compatible garage door openers or gate operators and close them from anywhere in the home.

827LM

MyQ LED Remote Light:

Wireless light that can program to the door opener or a remote control.

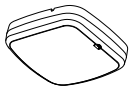

825LM

Remote Light Control:

Automatically control your lights using your garage door opener, a Security+ 2.0® remote control or a LiftMaster® Internet Gateway. Plugs into any interior outlet.

STANDARD ACCESSORIES

885LM

Security+ 2.0® Wireless Door Control:

Push bar, light feature and auxiliary button. Includes battery.

891LM

Single Button Security+ 2.0 Remote Control:

Includes visor clip.

893LM

3-Button Security+ 2.0 Remote Control:

Includes visor clip.

877LM

Wireless Keyless Entry:

For use outside of the home to enable access to the garage using a 4-digit PIN.

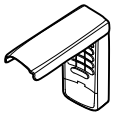

485LM

Battery Backup:

Provides backup power to the door opener. The battery has enough power for 30 hours of standby power or up to 20 cycles over a 24 hour period.

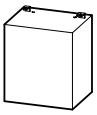

975LM

Laser Park Assist:

Laser enables homeowners to precisely park vehicles in the garage.

41A5281

Extension Brackets:

(Optional) For safety reversing sensor installation onto the wall or floor.

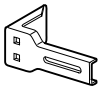

480LM

Alternate Mounting Kit:

This kit allows model 8500W to be mounted below the torsion bar in the case where the torsion bar is not round or the normal mounting area is obstructed.

041A6104

Cable Tension Monitor:

Cable tension monitor with 33 foot cord.

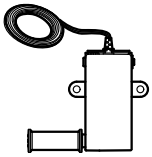

841LM

Automatic Door Lock:

The automatic door lock is used to prevent the door from being manually opened once the door is fully closed.

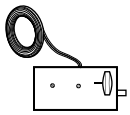

DRAFT 5

Warranty

LIFTMASTER® LIMITED WARRANTY

LiftMaster® ("Seller") warrants to the first retail purchaser of this product, for the residence in which this product is originally installed, that it is free from defects in materials and/or workmanship for a specific period of time as defined below (the "Warranty Period"). The warranty period commences from the date of purchase.

WARRANTY PERIOD			
Parts	**Motor**	**Accessories**	**Battery Backup**
5 years	Lifetime	1 year	1 year

The proper operation of this product is dependent on your compliance with the instructions regarding installation, operation, and maintenance and testing. Failure to comply strictly with those instructions will void this limited warranty in its entirety.

If, during the limited warranty period, this product appears to contain a defect covered by this limited warranty, call 1-800-528-9131, toll free, before dismantling this product. You will be advised of disassembly and shipping instructions when you call. Then send the product or component, pre-paid and insured, as directed to our service center for warranty repair. Please include a brief description of the problem and a dated proof-of-purchase receipt with any product returned for warranty repair. Products returned to Seller for warranty repair, which upon receipt by Seller are confirmed to be defective and covered by this limited warranty, will be repaired or replaced (at Seller's sole option) at no cost to you and returned pre-paid. Defective parts will be repaired or replaced with new or factory rebuilt parts at Seller's sole option. [You are responsible for any costs incurred in removing and/or reinstalling the product or any component.]

ALL IMPLIED WARRANTIES FOR THE PRODUCT, INCLUDING BUT NOT LIMITED TO ANY IMPLIED WARRANTIES OF MERCHANTABILITY AND FITNESS FOR A PARTICULAR PURPOSE, ARE LIMITED IN DURATION TO THE APPLICABLE LIMITED WARRANTY PERIOD SET FORTH ABOVE FOR THE RELATED COMPONENT(S), AND NO IMPLIED WARRANTIES WILL EXIST OR APPLY AFTER SUCH PERIOD. Some States and Provinces do not allow limitations on how long an implied warranty lasts, so the above limitation may not apply to you. THIS LIMITED WARRANTY DOES NOT COVER NON-DEFECT DAMAGE, DAMAGE CAUSED BY IMPROPER INSTALLATION, OPERATION OR CARE (INCLUDING, BUT NOT LIMITED TO ABUSE, MISUSE, FAILURE TO PROVIDE REASONABLE AND NECESSARY MAINTENANCE, UNAUTHORIZED REPAIRS OR ANY ALTERATIONS TO THIS PRODUCT), LABOR CHARGES FOR REINSTALLING A REPAIRED OR REPLACED UNIT, REPLACEMENT OF CONSUMABLE ITEMS (E.G., BATTERIES IN REMOTE CONTROL TRANSMITTERS AND LIGHT BULBS), OR UNITS INSTALLED FOR NON-RESIDENTIAL USE. THIS LIMITED WARRANTY DOES NOT COVER ANY PROBLEMS WITH, OR RELATING TO, THE GARAGE DOOR OR GARAGE DOOR HARDWARE, INCLUDING BUT NOT LIMITED TO THE DOOR SPRINGS, DOOR ROLLERS, DOOR ALIGNMENT OR HINGES. THIS LIMITED WARRANTY ALSO DOES NOT COVER ANY PROBLEMS CAUSED BY INTERFERENCE. UNDER NO CIRCUMSTANCES SHALL SELLER BE LIABLE FOR CONSEQUENTIAL, INCIDENTAL OR SPECIAL DAMAGES ARISING IN CONNECTION WITH USE, OR INABILITY TO USE, THIS PRODUCT. IN NO EVENT SHALL SELLER'S LIABILITY FOR BREACH OF WARRANTY, BREACH OF CONTRACT, NEGLIGENCE OR STRICT LIABILITY EXCEED THE COST OF THE PRODUCT COVERED HEREBY. NO PERSON IS AUTHORIZED TO ASSUME FOR US ANY OTHER LIABILITY IN CONNECTION WITH THE SALE OF THIS PRODUCT.

Some states and provinces do not allow the exclusion or limitation of consequential, incidental or special damages, so the above limitation or exclusion may not apply to you. This limited warranty gives you specific legal rights, and you may also have other rights, which vary from state to state and province to province.

DRAFT

DRAFT 5

Wi-Fi® is a registered trademark of Wi-Fi Alliance.
App Store is a service mark of Apple Inc.
Google Play is a trademark of Google Inc.
© 2017, LiftMaster
All Rights Reserved

114A4961