COMMERCIAL DC
VEHICULAR SLIDE GATE OPERATOR

INSTALLATION MANUAL

Models **HDSL24UL • HDFSL24UL**

EXTERNAL SAFETY DEVICES REQUIRED. SEE SAFETY SECTION FOR UL325 ENTRAPMENT PROTECTION REQUIREMENTS

- THIS PRODUCT MUST BE INSTALLED AND SERVICED IN ACCORDANCE WITH THIS MANUAL BY A TRAINED GATE SYSTEMS TECHNICIAN ONLY.
- This operator is for use on vehicular passage gates ONLY and not intended for use on pedestrian passage gates.
- HDSL24UL is intended for use in Class I, II, III, and IV vehicular slide gate applications.
- HDFSL24UL is intended for use in Class III and IV vehicular slide gate applications ONLY.
- Visit LiftMaster.com to locate a professional installing dealer in your area.
- This gate operator is compatible with MyQ® and Security+ 2.0® accessories.

Access installation and technical support guides or register this product

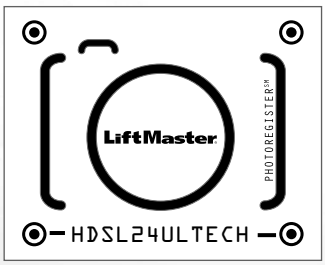

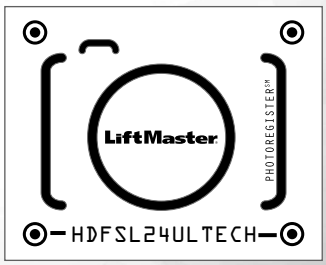

1. **Take a photo** of the camera icon including the points (⊙).
2. **Send it in** by texting the photo to 71403.

c UL US LISTED

LiftMaster
300 Windsor Drive
Oak Brook, IL 60523

LiftMaster®

TABLE OF CONTENTS

SAFETY 2
Safety Symbol and Signal Word Review....2
Usage Class....3
UL325 Entrapment Protection Requirements....3
Safety Installation Information....4
Gate Construction Information....5

INTRODUCTION 6
Carton Inventory....6
Operator Specifications....7
Site Preparation....8

INSTALLATION 9
Types of Installations....9
Step 1 Determine Location for Operator....10
Step 2 Install the Operator....11
Step 3 Attach the Chain....12
Step 4 Install Entrapment Protection....14
Step 5 Earth Ground Rod....16
Step 6 Power Wiring....16
Step 7 Connect Batteries....18
Step 8 Dual Gate Setup....20
Step 9 Install the Cover....22
Step 10 Install Warning Signs....22

ADJUSTMENT 23
Limit, Speed, and Force Adjustment....23
Obstruction Test....24

PROGRAMMING 26
Remote Controls (Not Provided)....26
LiftMaster Internet Gateway (not provided)....27
CAPXL Connected Access Portal....27
Erase All Codes....28
Erase Limits....28
Constant Pressure Override (CPO)....28
Gate Hold Open Feature....28
To Remove and Erase Monitored Entrapment Protection Devices....28

OPERATION 29
Gate Operator Setup Examples....29
Control Board Overview....30
Manual Disconnect....31
Reset Switch....31
Relay Board and Terminal Block Access....31
Operator Alarm....32
Remote Control....32

ACCESSORY WIRING 33
External Control Devices....33
Locks....34
Miscellaneous Wiring....34

EXPANSION AND RELAY BOARDS 35
Expansion and Relay Boards Overview....35
Auxiliary Relays....36
Wiring Accessories to the Expansion Board....37

MAINTENANCE 38
Important Safety Instructions....38
Maintenance Chart....39
Batteries....39
Drive Train....39

TROUBLESHOOTING 40
Diagnostic Codes....40
Control Board LEDs....41
Troubleshooting Chart....42

SOLAR PANELS 45
Step 6 Solar Panel(s)....45

REPAIR PARTS 49

ACCESSORIES 50

WARRANTY 52

APPENDIX 53
SAMS Wiring With Relays Not Energized....53
Dual Gate Settings....53
Limit Setup With a Remote Control....54
Wiring Diagram....55
Diagnostic Codes Table....56
Site Planning Safety Checklist....58

SAFETY

Safety Symbol and Signal Word Review

When you see these Safety Symbols and Signal Words on the following pages, they will alert you to the possibility of ***Serious Injury or Death*** if you do not comply with the warnings that accompany them. The hazard may come from something mechanical or from electric shock. Read the warnings carefully.

When you see this Signal Word on the following pages, it will alert you to the possibility of damage to your gate and/or the gate operator if you do not comply with the cautionary statements that accompany it. Read them carefully.

IMPORTANT NOTE:

- *BEFORE attempting to install, operate or maintain the operator, you must read and fully understand this manual and follow all safety instructions.*
- *DO NOT attempt repair or service of your gate operator unless you are an Authorized Service Technician.*

⚠ WARNING

MECHANICAL

⚠ WARNING

ELECTRICAL

⚠ CAUTION

WARNING: This product can expose you to chemicals including lead, which are known to the State of California to cause cancer or birth defects or other reproductive harm. For more information go to *www.P65Warnings.ca.gov.*

Usage Class

Class I - Residential Vehicular Gate Operator

A vehicular gate operator (or system) intended for use in garages or parking areas associated with a residence of one-to four single families.

Class II - Commercial/General Access Vehicular Gate

A vehicular gate operator (or system) intended for use in a commercial location or building such as a multi-family housing unit (five or more single family units), hotel, garages, retail store, or other buildings accessible by or servicing the general public.

Class III - Industrial/Limited Access Vehicular Gate

A vehicular gate operator (or system) intended for use in an industrial location or building such as a factory or loading dock area or other locations not accessible by or intended to service the general public.

Class IV - Restricted Access Vehicular Gate Operator

A vehicular gate operator (or system) intended for use in a guarded industrial location or building such as an airport security area or other restricted access locations not servicing the general public, in which unauthorized access is prevented via supervision by security personnel.

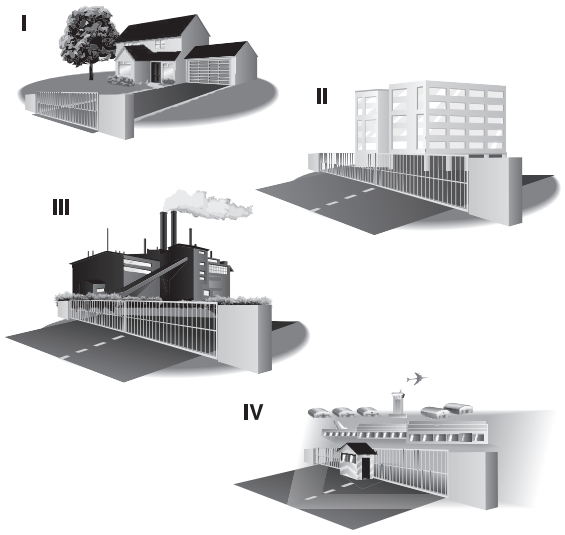

UL325 Entrapment Protection Requirements

Definitions

ENTRAPMENT: The condition when a person is caught or held in a position that increases the risk of injury.

SLIDE GATE ENTRAPMENT ZONE: An entrapment zone exists if at any point during travel, the gap between the gate and any opposing fixed edge or surface such as posts, walls, pillars, columns or the operator itself, is less than 16" (406 mm) in a location up to 6 ft. (1.8 m) above grade.

INDEPENDENT MONITORED ENTRAPMENT PROTECTION DEVICE: An entrapment protection device is independent if it is a different type (photoelectric sensors, edge device, inherent protection device) from the other devices in the same entrapment zone.

Use the *Site Planning Safety Checklist* in the appendix to identify entrapment zones found in your installation.

Requirements

- A **minimum of two** independent monitored entrapment protection devices are required to be installed at each entrapment zone.
- It is the responsibility of the installer to install external monitored entrapment protection devices for **each entrapment zone**.
- The operator will only operate with a **minimum of two** independent monitored entrapment protection devices installed in each direction; two in the open direction and two in the closed direction.

This operator has an inherent entrapment protection device built-in. The installer MUST provide one additional entrapment protection device for each entrapment zone.

Acceptable entrapment protection device types include:

- Inherent (built into the operator)
- LiftMaster monitored external photoelectric sensors, see page 50 for acceptable sensors.
- LiftMaster monitored external edge sensors, see page 50 for acceptable sensors.

IMPORTANT SAFETY INSTRUCTIONS

⚠ WARNING

To reduce the risk of INJURY or DEATH:

- READ AND FOLLOW ALL INSTRUCTIONS.
- NEVER let children operate or play with gate controls. Keep the remote control away from children.
- ALWAYS keep people and objects away from the gate. NO ONE SHOULD CROSS THE PATH OF THE MOVING GATE.
- **Test the gate operator monthly. The gate MUST reverse on contact with an object or reverse when an object activates the noncontact sensors. After adjusting the speed, force, or the limit of travel, retest the gate operator. Failure to adjust and retest the gate operator properly can increase the risk of INJURY or DEATH.**
- Use the manual release ONLY when the gate is not moving.
- KEEP GATES PROPERLY MAINTAINED. Read this manual. Have a qualified service person make repairs to gate hardware.
- The entrance is for vehicles ONLY. Pedestrians MUST use separate entrance.
- **SAVE THESE INSTRUCTIONS.**

Safety Installation Information

1. Vehicular gate systems provide convenience and security. Gate systems are comprised of many component parts. The gate operator is only one component. Each gate system is specifically designed for an individual application.
2. Gate operating system designers, installers and users must take into account the possible hazards associated with each individual application. Improperly designed, installed or maintained systems can create risks for the user as well as the bystander. Gate systems design and installation must reduce exposure to potential hazards.
3. A gate operator can create high levels of force in its function as a component part of a gate system. Therefore, safety features must be incorporated into every gate system design. Specific safety features include:
   - Edges Sensors (contact)
   - Guards for Exposed Rollers
   - Photoelectric Sensors
   - Screen Mesh
   - Instructional and Precautionary Signage
4. Install the gate operator only when:
   a. The operator is appropriate for the construction and the usage class of the gate.
   b. All openings of a horizontal slide gate are guarded or screened from the bottom of the gate to a minimum of 6 feet (1.8 m) above the ground to prevent a 2-1/4 inches (6 cm) diameter sphere from passing through the openings anywhere in the gate, and in that portion of the adjacent fence that the gate covers in the open position.
   c. All exposed pinch points are eliminated or guarded, and guarding is supplied for exposed rollers.
5. The gate operator is intended for installation only on gates used for vehicles. Pedestrians must be supplied with a separate access opening. The pedestrian access opening shall be designed to promote pedestrian usage. Locate the pedestrian access such that persons will not come in contact with the vehicular gate during the entire path of travel of the vehicular gate.
6. The gate must be installed in a location so that enough clearance is supplied between the gate and adjacent structures when opening and closing to reduce the risk of entrapment.
7. The gate must be properly installed and work freely in both directions prior to the installation of the gate operator.
8. Permanently mounted access controls intended for users to activate, must be located at least 6 feet (1.8 m) away from any moving part of the gate and where the user is prevented from reaching over, under, around or through the gate to operate the controls. Outdoor or easily accessible controls shall have a security feature to prevent unauthorized use. Exception: Emergency access controls only accessible by authorized personnel (e.g. fire, police) may be placed at any location in the line-of-sight of the gate.
9. For a gate operator utilizing a Stop and/or Reset button, it must be located in the line-of-sight of the gate. Activation of the reset control shall not cause the operator to start.
10. A minimum of two (2) WARNING SIGNS shall be installed in the area of the gate. Each warning sign is to be visible by persons located on the side of the gate on which the sign is installed.
11. For a gate operator utilizing a non-contact sensor:
    a. Reference installation manual regarding placement of non-contact sensor for each type of application. See Install Entrapment Protection section.
    b. Care shall be exercised to reduce the risk of nuisance tripping, such as when a vehicle trips the sensor while the gate is still moving.
    c. One or more non-contact sensors shall be located where the risk of entrapment or obstruction exists, such as the perimeter reachable by a moving gate or barrier.
12. For a gate operator utilizing a contact sensor such as an edge sensor:
    a. One or more contact sensors shall be located where the risk of entrapment or obstruction exists, such as at the leading edge, trailing edge and post mounted both inside and outside of a vehicular horizontal slide gate.
    b. A hard wired contact sensor shall be located and its wiring arranged so the communication between the sensor and the gate operator is not subject to mechanical damage.
    c. A wireless device such as one that transmits radio frequency (RF) signals to the gate operator for entrapment protection functions shall be located where the transmission of the signals are not obstructed or impeded by building structures, natural landscaping or similar obstruction. A wireless device shall function under the intended end-use conditions.

Role of Dealers, Installers, and Trained Gate System Technicians

- Demonstrate the basic functions and safety features of the gate system to owners/end users/general contractors, including how to turn off power and how to operate the manual disconnect feature.
- Leave safety instructions, product literature, installation manual and maintenance manual with end user.
- Explain to the owners the importance of testing by a trained gate system technician that includes a routine re-testing of the entire system including the entrapment protection devices, and explain the need for the owners to insure that this testing is performed monthly.

Role of End Users/Home Owners

- Contact a trained gate systems technician to maintain and repair the gate system (End users should never attempt to repair the gate system).
- Retain and utilize the installation manual and maintenance and important safety instructions; see page 38.
- Routinely check all gate operator functions and gate movement.
- Discontinue use if safety systems operate improperly, the gate is damaged, or the gate is difficult to move. Contact trained gate systems technician to repair the gate system.
- Prominently display and maintain warning signs on both sides of the gate.

Gate Construction Information

Vehicular gates should be installed in accordance with ASTM F2200: Standard Specification for Automated Vehicular Gate Construction. For a copy, contact ASTM directly at 610-832-9585 or www.astm.org.

1. General Requirements

1.1 Gates shall be constructed in accordance with the provisions given for the appropriate gate type listed, refer to ASTM F2200 for additional gate types.

1.2 Gates shall be designed, constructed and installed to not fall over more than 45 degrees from the vertical plane, when a gate is detached from the supporting hardware.

1.3 Gates shall have smooth bottom edges, with vertical bottom edged protrusions not exceeding 0.50 inches (12.7 mm) when other than the exceptions listed in ASTM F2200.

1.4 The minimum height for barbed tape shall not be less than 8 feet (2.44 m) above grade and for barbed wire shall not be less than 6 feet (1.83 m) above grade.

1.5 An existing gate latch shall be disabled when a manually operated gate is retrofitted with a powered gate operator.

1.6 A gate latch shall not be installed on an automatically operated gate.

1.7 Protrusions shall not be permitted on any gate, refer to ASTM F2200 for Exceptions.

1.8 Gates shall be designed, constructed and installed such that their movement shall not be initiated by gravity when an automatic operator is disconnected, in accordance with the following.

1.8.1 Vehicular horizontal slide gate shall not result in continuous, unimpeded movement in either lineal direction of its travel.

1.9 For pedestrian access in the vicinity of an automated vehicular gate, a separate pedestrian gate shall be provided. The pedestrian gate shall be installed in a location such that a pedestrian shall not come in contact with a moving vehicular access gate. A pedestrian gate shall not be incorporated into an automated vehicular gate panel.

2. Specific Applications

2.1 Any non-automated gate that is to be automated shall be upgraded to conform to the provisions of ASTM F2200.

2.2 This specification shall not apply to gates generally used for pedestrian access and to vehicular gates not to be automated.

2.3 When the gate operator requires replacement, the existing gate shall be upgraded to conform to the provisions of ASTM F2200.

2.4 When the gate of an automated gate system requires replacement, the new gate shall conform to the provisions of ASTM F2200.

3. Vehicular Horizontal Slide Gates

3.1 The following provisions shall apply to Class I, Class II and Class III vehicular horizontal slide gates:

3.1.1 All weight bearing exposed rollers 8 feet (2.44 m), or less, above grade shall be guarded or covered.

3.1.2 All openings shall be designed, guarded, or screened from the bottom of the gate to the top of the gate or a minimum of 6 ft. (1.83 m) above grade, whichever is less, to prevent a 2 1⁄4 in. (57 mm) diameter sphere from passing through the openings anywhere in the gate, and in that portion of the adjacent fence that the gate covers in the open position. The gate panel shall include the entire section of the moving gate, including any back frame or counterbalance portion of the gate.

3.1.3 A gap, measured in the horizontal plane parallel to the roadway, between a fixed stationary object nearest the roadway, (such as a gate support post) and the gate frame when the gate is in either the fully open position or the fully closed position, shall not exceed 2-1/4 inches (57 mm). Exception: All other fixed stationary objects greater than 16 in. (406 mm) from the gate frame shall not be required to comply with this section.

3.1.4 Positive stops shall be required to limit travel to the designed fully open and fully closed positions. These stops shall be installed at either the top of the gate, or at the bottom of the gate where such stops shall horizontally or vertically project no more than is required to perform their intended function.

3.1.5 All gates shall be designed with sufficient lateral stability to assure that the gate will enter a receiver guide, refer to ASTM F2200 for panel types.

3.2 The following provisions shall apply to Class IV vehicular horizontal slide gates:

3.2.1 All weight bearing exposed rollers 8 feet (2.44 m), or less, above grade shall be guarded or covered.

3.2.2 Positive stops shall be required to limit travel to the designed fully open and fully closed positions. These stops shall be installed at either the top of the gate, or at the bottom of the gate where such stops shall horizontally or vertically project no more than is required to perform their intended function.

Carton Inventory

NOT SHOWN: Documentation Packet, Chain #40 - 30 feet with #40 master link, Eye Bolt Kit

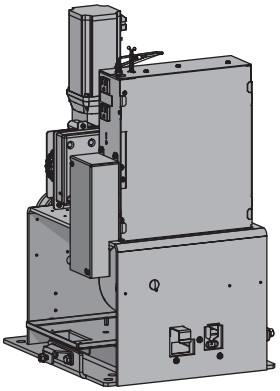

Operator

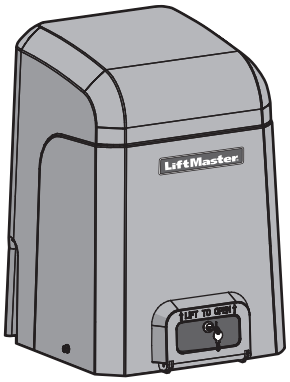

Cover

MONITORED ENTRAPMENT PROTECTION DEVICES

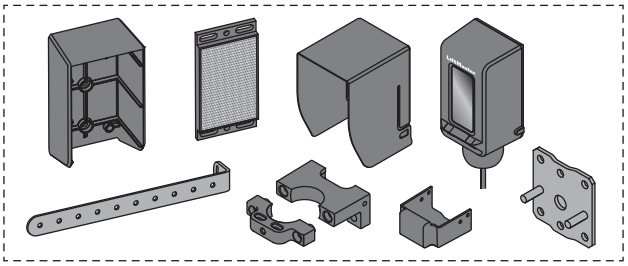

LiftMaster Monitored Retro-Reflective Photoelectric Sensor Model LMRRUL HDSL24UL only

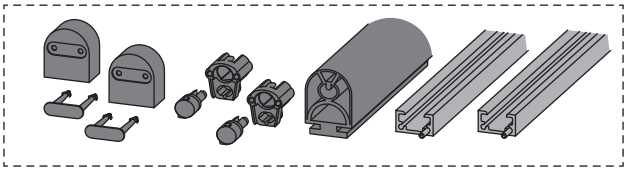

5 ft. Edge sensor kit - HDSL24UL (1), HDFSL24UL (2)

Warning Signs (2)

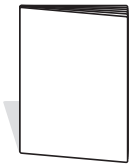

Installation Manual

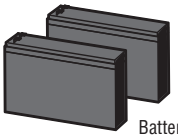

Battery 12 Vdc 7AH (2)

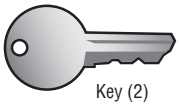

Key (2)

Operator Specifications

Usage Classification	HDSL24UL: Class I, II, III, and IV HDFSL24UL: Class III and IV
Main AC Supply	HDSL24UL: 120 Vac, 4 Amps (10 Amps including Accessory Outlets) **OR** 240 Vac, 2 Amps HDFSL24UL: 120 Vac, 7 Amps (13 Amps including Accessory Outlets) **OR** 240 Vac, 4 Amps When Optional Transformer Kit Model 3PHCONV is installed in the field, operator is rated 208/240/480/575 VAC, 5.2/4.5/2.3/1.9 A, 60 Hz, 1 PH
System Operating Voltage	24 Vdc Transformer Run / Battery Backup
Accessory Power	24 Vdc, 1A max. for ON + SW (switched)
Solar Power Max	24 Vdc at 60 watts max.
Maximum Gate Weight	HDSL24UL: 3,000 lbs. (1,360 kg) HDFSL24UL: 2,000 lbs. (907 kg)
Minimum Gate Travel Distance	4 feet (1.2 m)
Maximum Gate Travel Distance	75 feet (22.86 m)
Maximum Gate Travel Speed	HDSL24UL: 1 ft./sec. HDFSL24UL: 2 ft./sec
Maximum Daily Cycle Rate	Continuous for line voltage, not continuous for solar
Maximum Duty Cycle	Continuous
Operating Temperature	Without Heater: -20°C to 60°C (-4°F to 140°F) With Optional Heater: -40°C to 60°C (-40°F to 140°F)
120VAC accessory power outlets	6 amps When the 3PHCONV kit is used, the outlets are only rated 1 Amp
External Entrapment Protection Device Inputs (non-contact and/or contact)	Main board - up to 2 close entrapment protection devices and 1 open entrapment protection device. Expansion board -up to 3 entrapment protection devices configurable to either the close or open direction and up to 8 edge sensors when using the wireless edge sensor kit model LMWEKITU and LMWETXU.

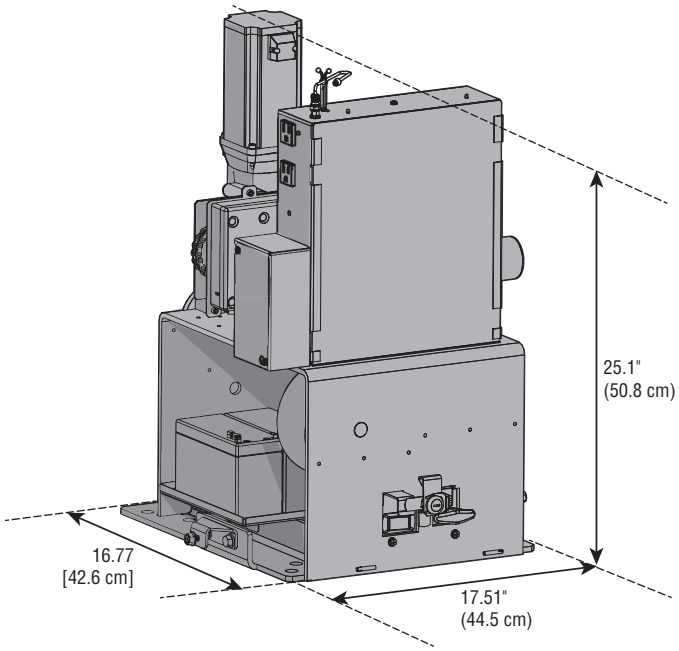

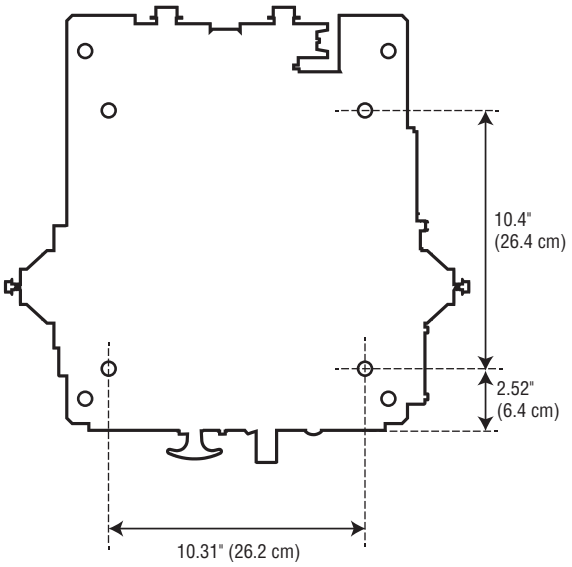

Site Preparation

Check the national and local building codes **BEFORE** installation. Refer also to the *Site Planning Safety Checklist* in the Appendix.

Conduit and Concrete Pad

Trench and install conduit. Before trenching, contact underground utility locating companies. Conduit must be UL approved for low and high voltage. Consider the operator placement BEFORE installing the pad or post.

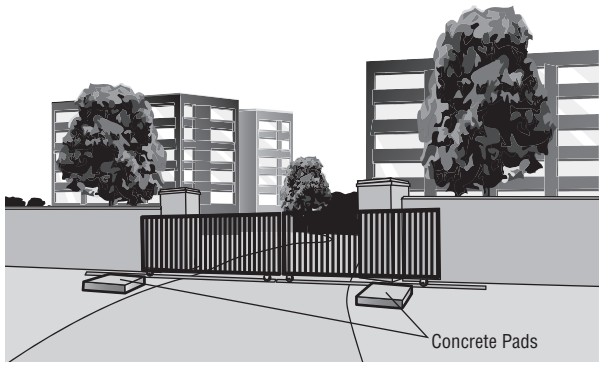

Safety

Entrapment protection devices are required to protect against any entrapment or safety conditions encountered in your gate application. Install a warning sign (two provided) on the inside and outside of the property, where easily visible.

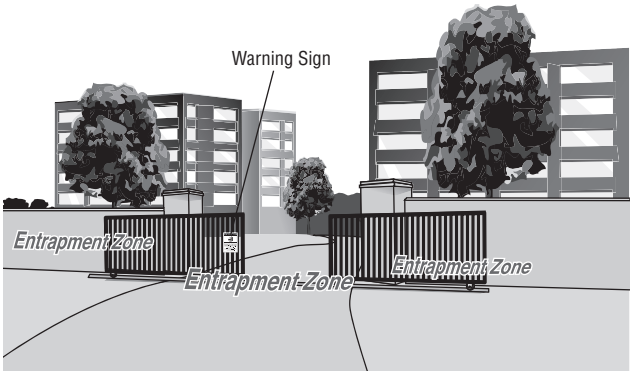

Gate

Gate must be constructed and installed according to ASTM F2200 standards (refer to page 4). Gate must fit specifications of operator (refer to specifications).

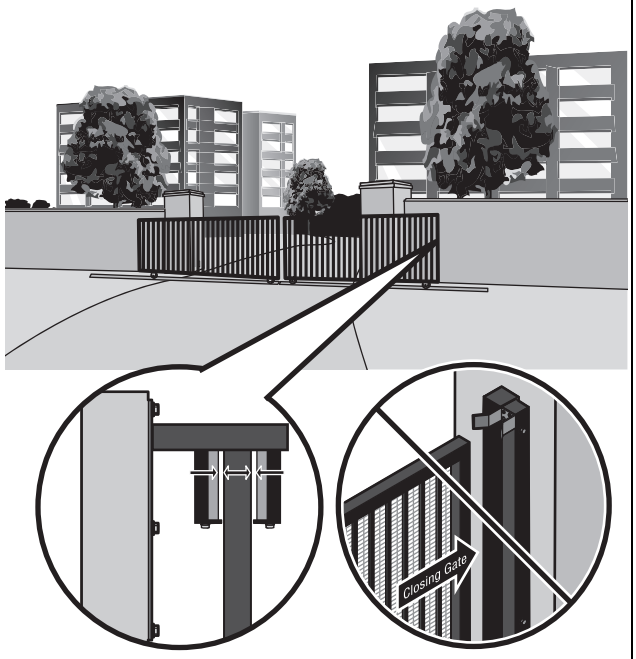

SAFETY CATCH ROLLERS
Install catch rollers with safety covers on the side of a post or wall with a minimal distance of half an inch between the rollers and gate

DO NOT use a gate catch post. Because the coasting distance may vary due to changes in temperature, it is NOT recommended to install a catch post in front of the gate's path. To do so will cause the gate to hit the post in certain instances.

Additional Accessories

The vehicle loops allow the gate to stay open when vehicles are obstructing the gate path. Suggested for vehicles 14 feet (4.27 m) or longer. Vehicle loops are not required but are recommended. Before installing your Access Control Device(s) be sure to complete a site survey and determine the best device for your site needs.

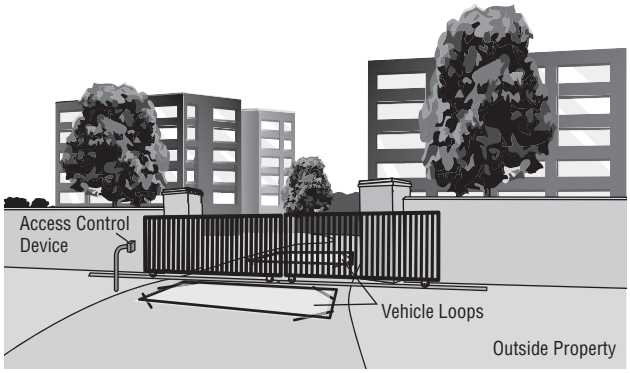

INSTALLATION

⚠ CAUTION

- To AVOID damaging gas, power or other underground utility lines, contact underground utility locating companies BEFORE digging more than 18 inches (46 cm) deep.
- ALWAYS wear protective gloves and eye protection when changing the battery or working around the battery compartment.

Types of Installations

Standard Installation

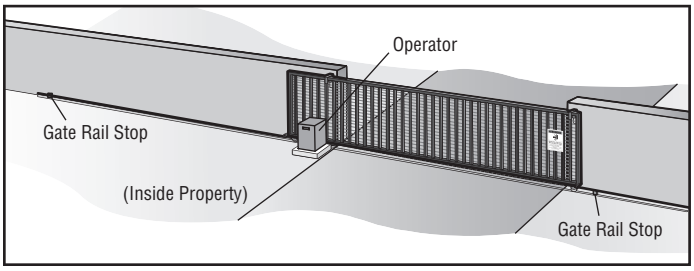

Rear Installation

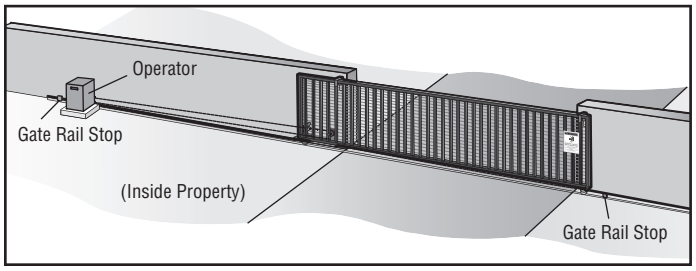

Step 1 Determine Location for Operator

Check the national and local building codes before installation.

Standard Installation

1. The gate operator should be installed near the front roller of the gate. Lay out the concrete pad.
2. Install the electrical conduit.
3. Pour a concrete pad (reinforced concrete is required).

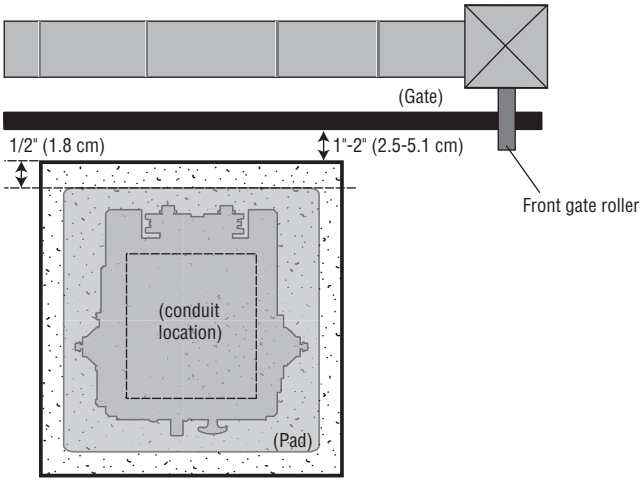

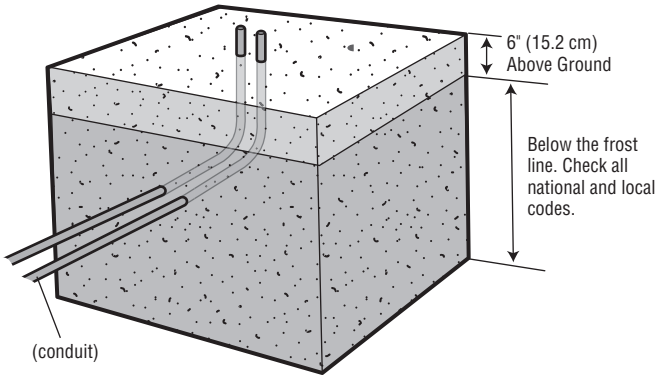

Rear Installation
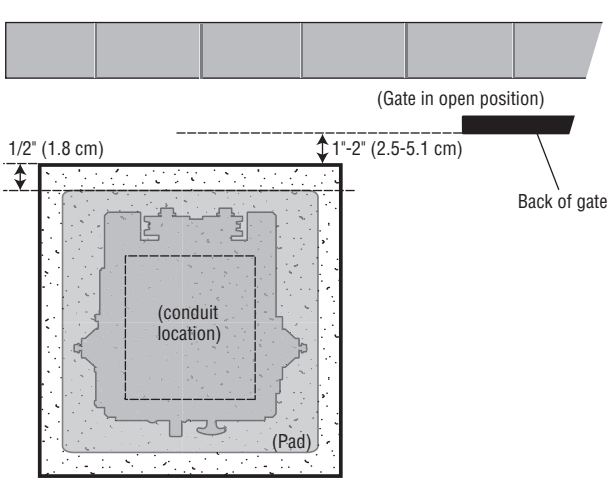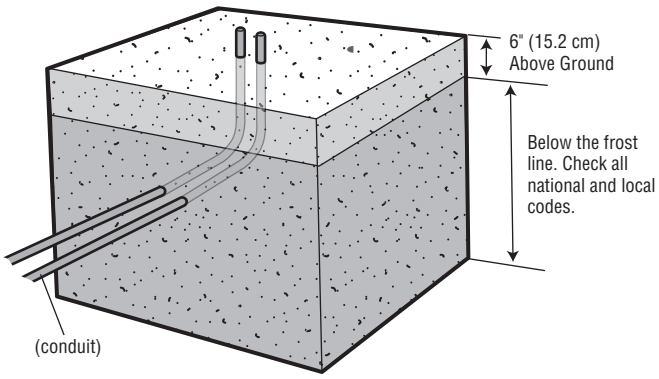
1. The gate operator should be installed near the back of the gate in the OPEN position. Lay out the concrete pad.
2. Install the electrical conduit.
3. Pour a concrete pad (reinforced concrete is required).