⚠ WARNING

To prevent SERIOUS INJURY or DEATH from a moving gate:

- ALL gate operator systems REQUIRE two independent entrapment protection systems for each entrapment zone.
- Entrapment protection devices MUST be installed to protect anyone who may come near a moving gate.
- Entrapment protection devices MUST be located to protect in BOTH the open and close gate cycles.
- Locate entrapment protection devices to protect between moving gate and RIGID objects, such as posts, walls, pillars, columns, or operator itself.

Step 4 Install Entrapment Protection

Install entrapment protection devices according to the *UL 325 Entrapment Protection Requirements* section, see page 3. Use the *Site Planning Safety Checklist* in the appendix, to identify entrapment zones that will result from the installation.

1. Install entrapment protection devices for ALL entrapment zones. This operator has an inherent entrapment protection device built-in. The installer MUST provide one additional entrapment protection device for each entrapment zone.
2. The operator will NOT run unless a **minimum of two** external devices are connected; one in the open direction and one in the closed direction.
3. Test ALL entrapment protection devices AFTER installing the operator, refer to the manual provided with your entrapment protection device.

Definitions

ENTRAPMENT: The condition when a person is caught or held in a position that increases the risk of injury.

SLIDE GATE ENTRAPMENT ZONE: An entrapment zone exists if at any point during travel, the gap between the gate and any opposing fixed edge or surface such as posts, walls, pillars, columns or operator itself, is less than 16" (406 mm) in a location up to 6 ft. (1.8 m) above grade.

See *Accessories* for approved entrapment protection devices.

Illustration is for example only; your site may have additional entrapment zones which MUST be protected.

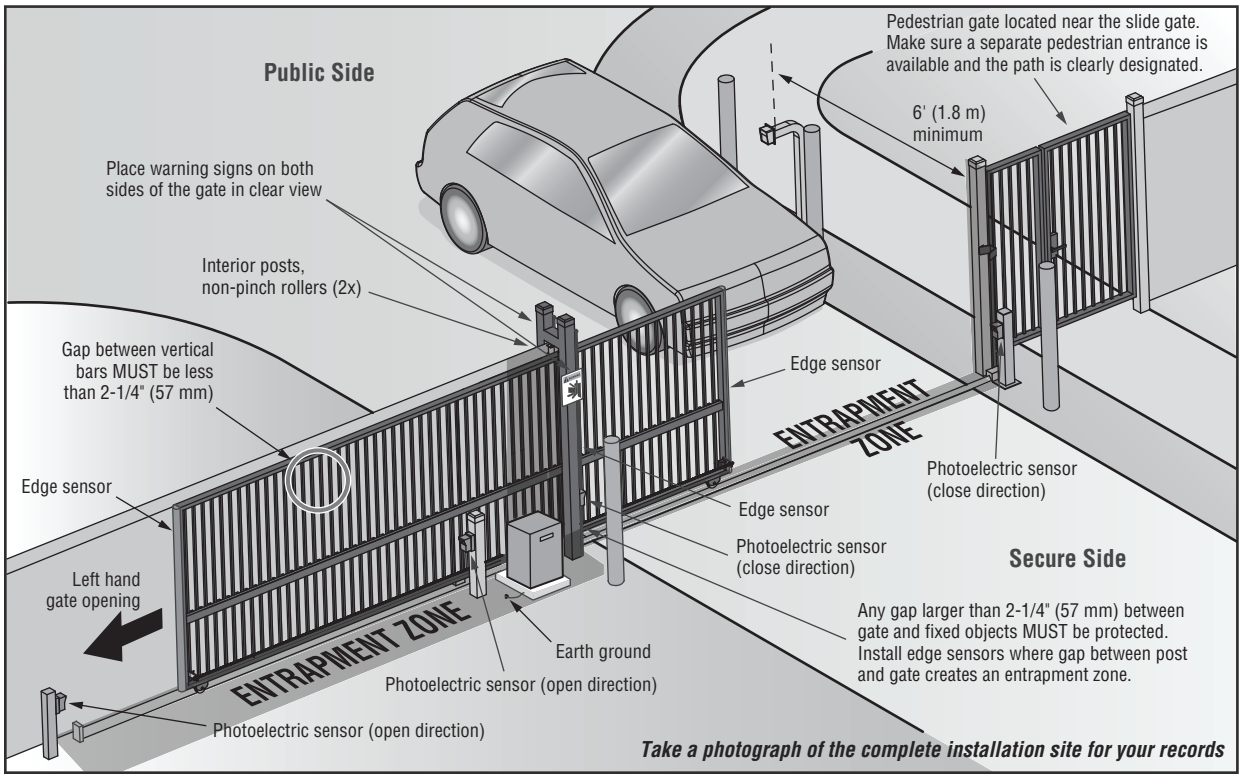

Illustrations provided by DASMA Gate Systems Safety Guide

Wire Entrapment Protection Devices

There are three options for wiring external entrapment protection devices depending on the specific device and how the device will function. Refer to the manual included with your entrapment protection device for more information. These entrapment protection device inputs are for monitored devices, which include pulsed photoelectric sensors, resistive edge sensors, and pulsed edge sensors. **Only one monitored entrapment protection device may be wired to each input.** Additional monitored entrapment protection devices may be wired to the expansion board.

NOTE: *Board inputs for entrapment protection devices are yellow.*

Control Board

CLOSES EYES/INTERRUPT

(2 Terminals) The CLOSE EYES/INTERRUPT input is for photoelectric sensor entrapment protection for the close direction. When an obstruction is sensed during gate closing the gate will open to the full open position and resets the Timer-to-Close. This input will be disregarded during gate opening.

CLOSE EDGE

(2 Terminals) The CLOSE EDGE input is for edge sensor entrapment protection for the close direction. When an obstruction is sensed during gate closing the gate will reverse to the full open position, disengaging the Timer-to-Close. This input will be disregarded during gate opening.

OPEN EYES/EDGE

(2 Terminals) The OPEN EYES/EDGE input is for photoelectric sensor or edge sensor entrapment protection for the open direction. When an obstruction is sensed during gate opening the gate will reverse for 4 seconds then stop. This input will be disregarded during gate closing.

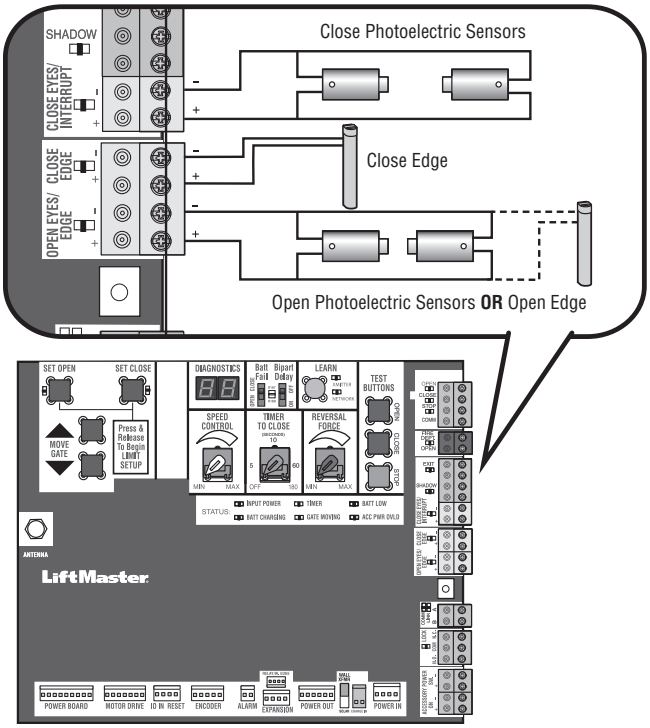

Expansion Board

EYE ONLY and COM

Open or Close Direction Photoelectric Sensors, the functionality is based on the switch settings (located next to the terminals)

Switch set to CLOSE: gate reverses fully when an obstruction is sensed

Switch set to OPEN: gate reverses 4 seconds when an obstruction is sensed

EYE/EDGE and COM

Open or Close Direction Photoelectric Sensors or Edge Sensor, the functionality is based on the switch settings (located next to the terminals)

Switch set to CLOSE: gate reverses fully when an obstruction is sensed

Switch set to OPEN: gate reverses 4 seconds when an obstruction is sensed

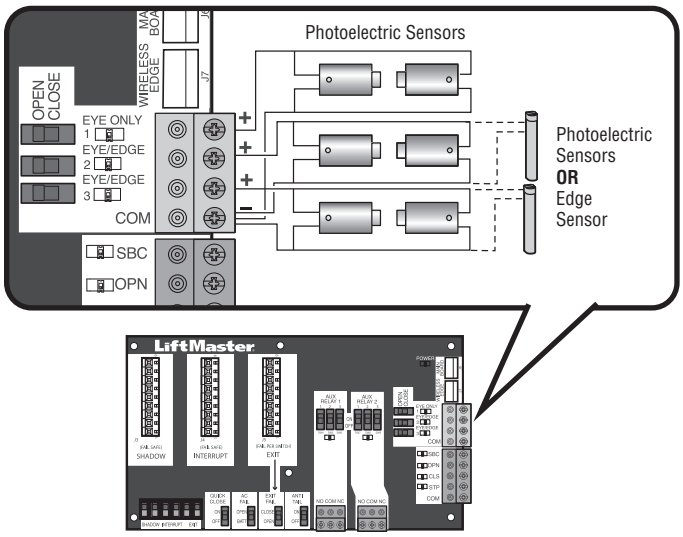

Step 5 Earth Ground Rod

Use the proper earth ground rod for your local area. The ground wire must be a single, whole piece of wire. Never splice two wires for the ground wire. If you should cut the ground wire too short, break it, or destroy its integrity, replace it with a single wire length.

1. Install the earth ground rod within 3 feet (.9 m) of the operator.
2. Run wire from the earth ground rod to the operator.

NOTE: *If the operator is not grounded properly the range of the remote controls will be reduced and the operator will be more susceptible to lightning and surge damage.*

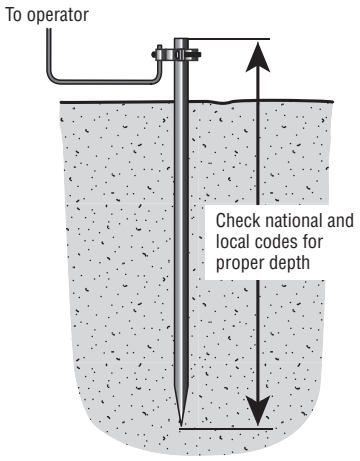

Step 6 Power Wiring

⚠ ⚠ WARNING

To reduce the risk of SEVERE INJURY or DEATH:

- ANY maintenance to the operator or in the area near the operator MUST NOT be performed until disconnecting the electrical power (AC or solar and battery) and locking-out the power via the operator power switch. Upon completion of maintenance the area MUST be cleared and secured, at that time the unit may be returned to service.
- Disconnect power at the fuse box BEFORE proceeding. Operator MUST be properly grounded and connected in accordance with national and local electrical codes. ***NOTE:*** *The operator should be on a separate fused line of adequate capacity.*
- ALL electrical connections MUST be made by a qualified individual.
- DO NOT install ANY wiring or attempt to run the operator without consulting the wiring diagram.
- ALL power wiring should be on a dedicated circuit and well protected. The location of the power disconnect should be visible and clearly labeled.
- ALL power and control wiring MUST be run in separate conduit.

The operator can be wired for either 120 Vac or 240 Vac or a solar panel (not provided). Follow the directions according to your application. An optional Transformer Kit (Model 3PHCONV) can be used to change the input voltage (208/240/480/575 Vac) to an output voltage of 120 Vac (refer to Accessories). For dual gate applications, power will have to be connected to each operator. Main power supply and control wiring MUST be run in separate conduits.

SOLAR APPLICATIONS: For solar applications see page 48 in the *Solar Panels* section. Follow the directions according to your application.

NOTE: *If using an external receiver use shielded wire for the connections and mount the receiver away from the operator to avoid interference from the operator.*

MAXIMUM WIRE LENGTH							
AMERICAN WIRE GAUGE (AWG)	STANDARD OPERATOR			OPERATOR + ACCESSORIES POWERED BY TRANSFORMER KIT accessory power outlets rated at 1 amp when the 3PHCONV kit is used			
	120 VAC, 10A (includes fully loaded outlets)	120 VAC, 4A	240 VAC, 2A	208 VAC, 4.8A	240 VAC, 4.2A	480 VAC, 2.1A	575 VAC, 1.7A
14	75	150	600	200	450	1,700	2,500
12	125	225	900	300	700	2,800	4,000
10	200	360	1,500	500	1,200	4,400	6,400
8	300	600	2,300	800	1,800	7,000	10,000
6	500	900	3,600	1,200	2,800	11,000	16,000
4	800	1,500	5,800	2,000	4,500	18,000	25,000
Chart assumes: copper wire, 65°C, 5% drop							

INSTALLATION

All control wiring used to connect external devices to Class 2 circuits of the operator must be (QPTZ) Power-Limited Circuit Cables, Type CL2, CL2P, CL2R, or CL2X or other cable with equivalent or better electrical, mechanical, and flammability ratings.

1. Turn off the AC power from the main power source circuit breaker.
2. Run the AC power wires to the operator.
3. Make sure the operator AC switch is in the OFF position, see page 18.
4. Remove the junction box cover from the electrical box by loosening the screws and sliding the cover to the side.
5. **120 Vac:** Factory default is 120 Vac. Skip to 5.
   240 Vac: Unplug the power wiring connector from the 120 Vac socket (factory default location) and plug it into the 240 Vac socket. ***NOTE:*** *The accessory outlets are disabled and cannot be used with the 240 Vac option.*

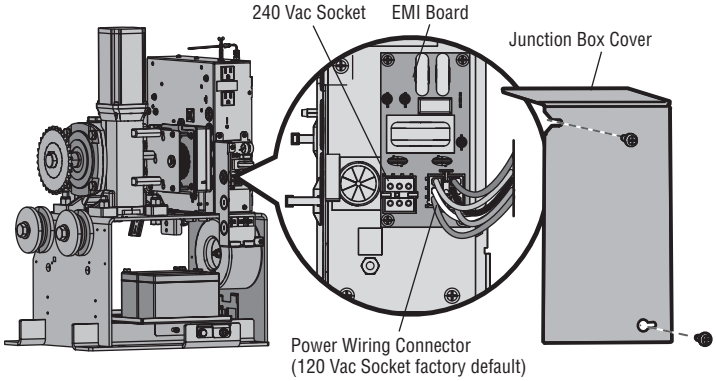

6. Connect the incoming green wire to the earth ground nut.
7. Connect the white wire to NEUTRAL using a wire nut.
8. Connect the black wire to HOT using a wire nut.
9. Replace the junction box cover. Ensure the wires are not pinched.

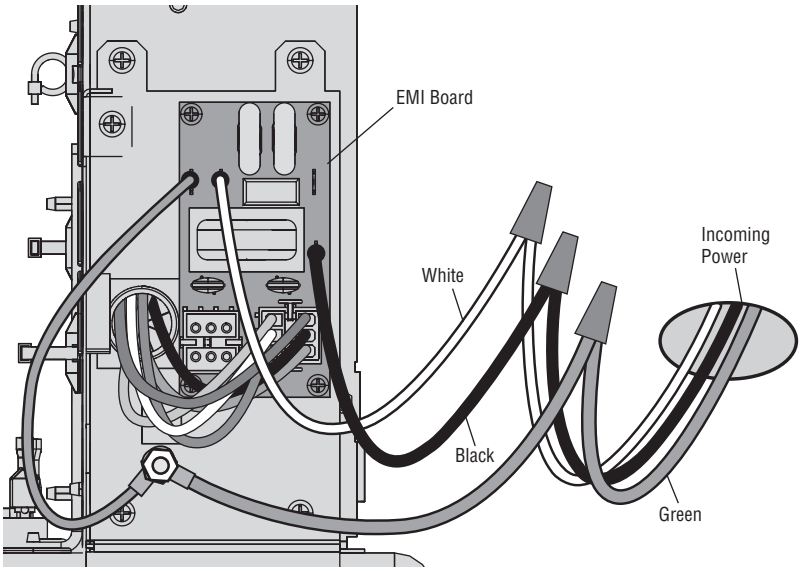

Plug In Transformer Power

Wire plug in transformer power as shown.

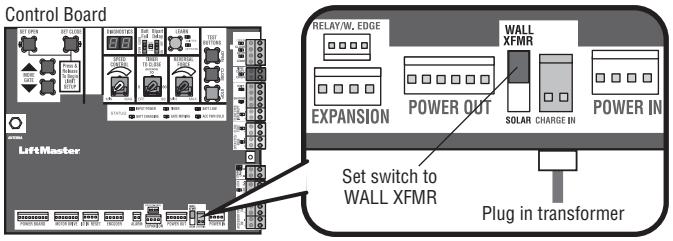

AC Power Switch

The AC switch on the operator turns the incoming 120/240 Vac power ON or OFF. The AC switch ONLY turns off AC power to the control board and DOES NOT turn off battery power.

Battery Switch

The battery switch turns the battery power on or off.

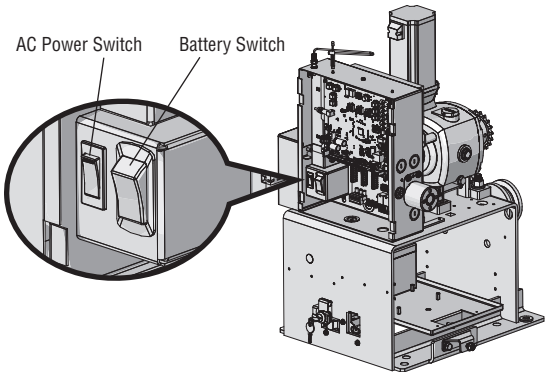

Step 7 Connect Batteries

7AH Batteries

The batteries are charged in the circuit by the integrated transformer.

1. Turn the AC power switch to OFF.
2. Turn the battery switch OFF .
3. Connect a jumper between the positive(+) terminal of the battery to the negative terminal(-) of the other battery.
4. Connect the red battery wire from the operator to the positive(+) terminal of the battery.
5. Connect the black battery wire from the operator to the negative (-) terminal of the battery.
6. Turn the battery switch ON .
7. Turn the AC power switch to ON to restore AC power.

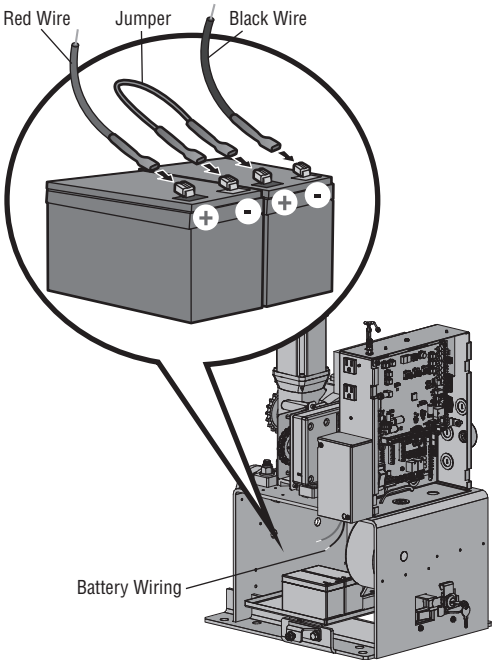

33AH Batteries

The batteries are charged in the circuit by the integrated transformer. The 33AH application requires harness kit model K42-0102-000 (not provided), see *Accessories*.

1. Turn the AC power switch to OFF.
2. Turn the battery switch OFF.
3. Connect a jumper between the positive(+) terminal of the battery to the negative terminal(-) of the other battery.
4. Connect the (+) terminal of the battery to the red battery wire from the operator using the RED harness kit wire .
5. Connect the (-) terminal of the battery to the black battery wire from the operator using the BLACK harness kit wire.
6. Turn the battery switch ON .
7. Turn the AC power switch to ON to restore AC power.

33AH batteries are NOT compatible if transformer kit model 3PHCONV is installed.

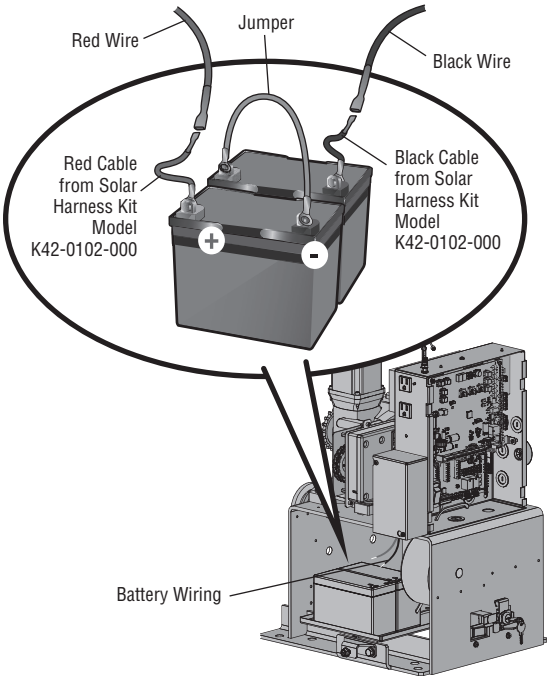

Step 8 Dual Gate setup

There are two options for dual gate communication: wired or wireless. Follow the directions according to your application. Do not use wired and wireless communication simultaneously. Wired dual gate applications will have a longer battery standby time than wireless applications.

Wireless setup

To activate the wireless feature:

1. Choose an operator to be the network primary operator. All wireless accessories will need to be programmed to the primary operator. ***NOTE:*** *We recommend that all accessories and board configurations are set on the primary operator.*
2. Press and release the LEARN button on the primary operator. The green XMITTER LED will light. ***NOTE:*** *The operator will time out of programming mode after 180 seconds.*
3. Press and release the LEARN button again on the primary operator. The yellow NETWORK LED will light.
4. Press and release the OPEN test button to assign this operator as network primary.
5. Press and release the LEARN button on the second operator. The green XMITTER LED will light.
6. Press and release the LEARN button again on the second operator. The yellow NETWORK LED will light.
7. Press and release the CLOSE test button to assign this operator as network second.

Both operators will beep and the yellow NETWORK LEDs will turn off indicating programming is successful.

To deactivate the wireless feature:
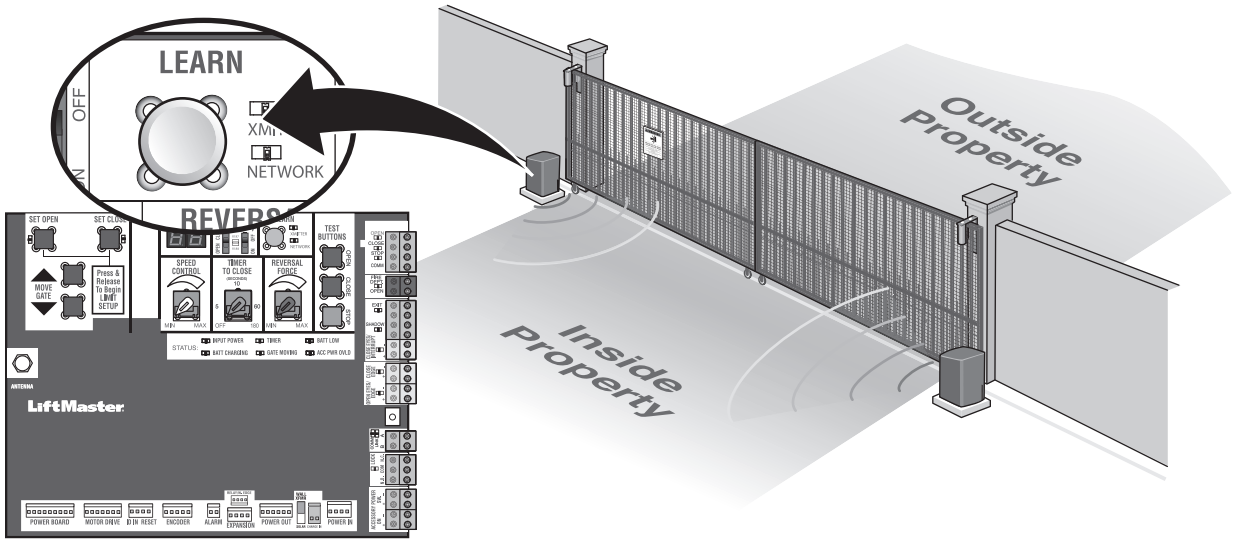
1. Press and release the LEARN button on either operator. The green XMITTER LED will light.
2. Press and release the LEARN button again on the same operator. The yellow NETWORK LED will light.
3. Press and hold the LEARN button for 5 seconds. The yellow NETWORK LED will blink (operator will beep) then turn off indicating successful deactivation.
4. Press and release SET OPEN and SET CLOSE buttons simultaneously. The yellow SET OPEN and SET CLOSE LEDs will light.
5. Press and release SET OPEN and SET CLOSE buttons simultaneously again. Both yellow LEDs will turn off and entrapment protection devices will be relearned.
6. Repeat the steps for the other operator.