Wired setup

Before digging, contact local underground utility locating companies. Use PVC conduit to prevent damage to cables.

1. **Disconnect ALL power to the operator and turn OFF the battery switch.**
2. Trench across driveway to bury the shielded twisted pair cable.
3. Connect the wires from the shielded twisted pair cable to the Com Link terminals on the primary gate operator control board. ***NOTE:*** *We recommend that all accessories and board configurations are set on the primary operator.*
4. Route the shielded twisted pair cable to the secondary gate operator's control board.
5. Connect the wires from the shielded twisted pair cable to the Com Link terminals on the secondary control board (Com Link A to Com Link A and Com Link B to Com Link B). Ground the shield of the cable to the chassis ground of one operator.
6. **Connect ALL power to the operator and turn ON the battery switch.**

DUAL GATE WIRE TYPE (SHIELDED TWISTED PAIR CABLE)	
22AWG up to 200 feet (61 m)	18AWG - 200-1000 feet (61-305 m)
Wire must be rated at 30 Volt minimum	

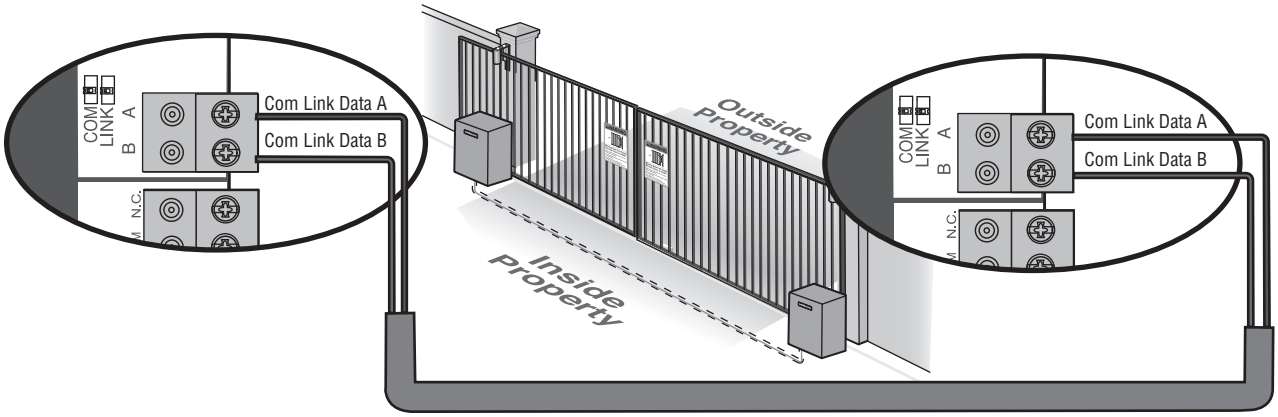

Bipart delay/synchronized close

The LOCK/BIPART DELAY switch is used only with dual gate applications and serves two functions:

- **BIPART DELAY**

  Not applicable for slide gate applications.
- **SYNCHRONIZED CLOSE**

  To synchronize the closing of the gates, set the LOCK/BIPART DELAY switch to ON for both operators.

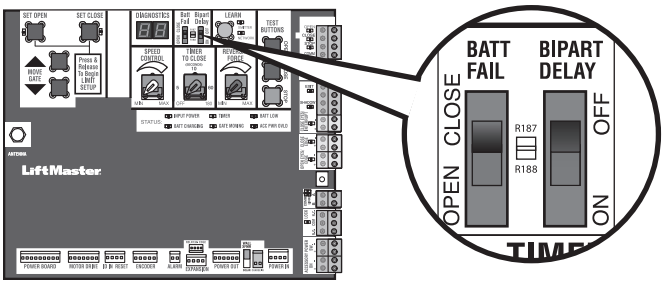

Step 9 Install the cover

Before installing the cover, follow the instructions in the Adjustment section to adjust the limits, speed, and force.

1. Slide the cover over the operator.
2. Align the holes in the cover with the threaded holes in the operator's chassis and secure the cover with the provided screws.

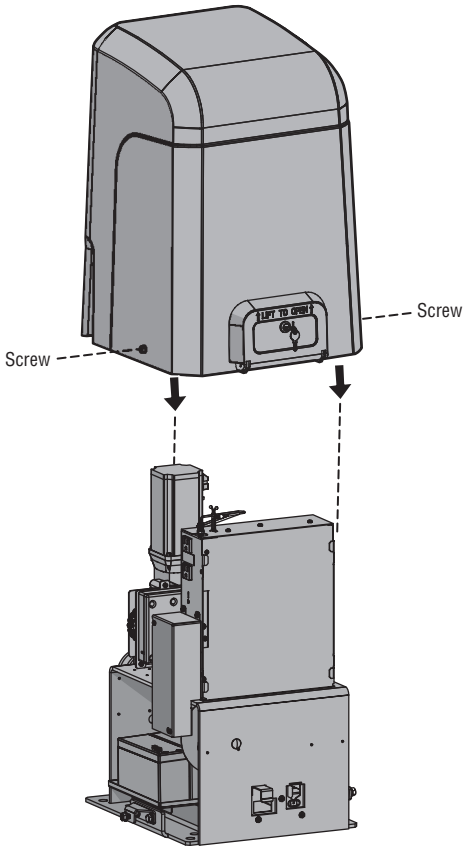

Step 10 Install Warning Signs

Installers MUST install the UL required warning signs. The signs MUST be installed in plain view on **both sides** of each gate installed. Use the fastening holes in each corner to permanently secure the sign.

Place warning signs on **both sides** of the gate in clear view

The basic installation is complete.

Limit, Speed, and Force Adjustment

⚠ WARNING

To reduce the risk of SEVERE INJURY or DEATH:

- Without a properly installed safety reversal system, persons (particularly small children) could be SERIOUSLY INJURED or KILLED by a moving gate.
- Too much force on gate will interfere with proper operation of safety reversal system.
- NEVER increase force beyond minimum amount required to move gate.
- NEVER use force adjustments to compensate for a binding or sticking gate.
- If one control (force, speed or travel limits) is adjusted, the other controls may also need adjustment.
- After ANY adjustments are made, the safety reversal system MUST be tested. Gate MUST reverse on contact with an object.
- Faster gate speed increases risk to pedestrians. Use minimum speed necessary to move gate.

Introduction

Your operator is designed with electronic controls to make travel limit and force adjustments easy. The adjustments allow you to program where the gate will stop in the open and close position. The electronic controls sense the amount of force required to open and close the gate. The force is adjusted automatically when you program the limits but should be fine tuned using the REVERSAL FORCE dial on the control board (refer to *Fine Tune the Force* section) to compensate for environmental changes. The limit setup LEDs (located next to the SET OPEN and SET CLOSE buttons) indicate the status of the limits, refer to the table to the right.

The limits can be set using the control board (below) or a remote control (refer to *Limit Setup with a Remote Control* in the Appendix). Setting the limits with a remote control requires a 3-button remote control programmed to OPEN, CLOSE, and STOP.

NOTE: *The TEST buttons on the control board will not work until the limits have been set and the required entrapment protection devices are installed.*

LIMIT SETUP LEDS			
SET OPEN LED	**SET CLOSE LED**	**OPERATOR MODE**	**EXPLANATION**
OFF	OFF	NORMAL MODE	Limits are set
BLINKING	BLINKING	LIMIT SETTING MODE	Limits are not set
BLINKING	ON	LIMIT SETTING MODE	Open limit is not set
ON	BLINKING	LIMIT SETTING MODE	Close limit is not set
ON	ON	LIMIT SETTING MODE	Limits are set

Set the Initial Limits, Speed, and Force

For dual gate applications the limits will have to be set for each operator. The gate MUST be attached to the operator before setting the limits and force.

For slide gate applications the open limit and closed limit MUST be set at least four feet apart.

1. Press and release the SET OPEN and SET CLOSE buttons simultaneously to enter limit setting mode.
2. Press and hold one of the MOVE GATE buttons to move the gate to the open or close limit.
3. Press and release the SET CLOSE or SET OPEN button depending on which limit is being set.
4. Press and hold one of the MOVE GATE button to move the gate to the other limit.
5. Press and release the SET CLOSE or SET OPEN button depending on which limit is being set.
6. Set the speed dial to the desired setting, see page 24.
   HDSL24UL: 0.5 ft/sec. min - 1 ft./sec. max.
   HDFSL24UL: 1 ft/sec. min - 2 ft./sec. max.
7. Cycle the gate open and close. This automatically sets the force.

When limits are set properly the operator will automatically exit limit setting mode.

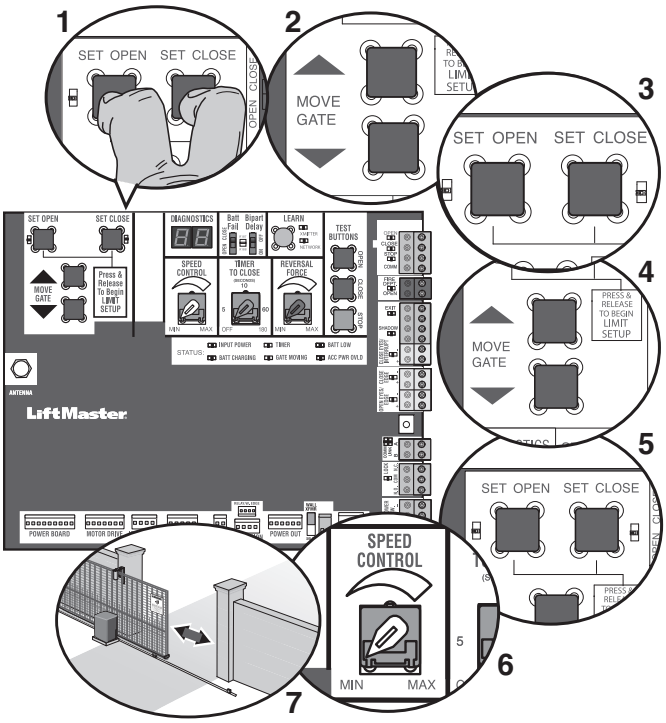

ADJUSTMENT

Speed Control

The SPEED CONTROL dial controls the speed of the operator. The dial is preset to minimum from the factory. Set the speed as low as possible for the intended application.

Gate operating speed for HDSL24UL 0.5 ft./sec. - 1 ft./sec.

Gate operating speed for HDFSL24UL 1 ft./sec. - 2 ft./sec.

For dual gate setup, set the SPEED CONTROL dial on each operator to the same setting or make sure the gate that travels further is set faster than the other operator for the smoothest operation.

After any speed adjustment:

1. **Cycle the gate open and close to automatically relearn the forces.**
2. **Perform the *Obstruction Test*, see page 25.**

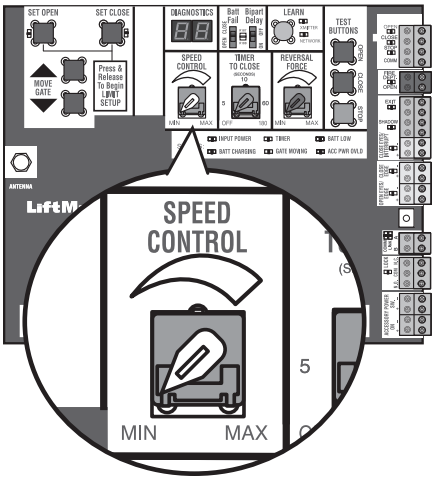

Fine Tune the Force

Once the initial limits have been set, the REVERSAL FORCE DIAL on the control board is used for fine tuning the force where wind or environmental changes may affect the gate travel. The REVERSAL FORCE DIAL is set to minimum at the factory.

Based on the length and weight of the gate it may be necessary to make additional force adjustments. The force setting should be high enough that the gate will not reverse by itself nor cause nuisance interruptions, but low enough to prevent serious injury to a person. The force setting is the same for both the open and close gate directions.

1. Open and close the gate with the TEST BUTTONS.
2. If the gate stops or reverses before reaching the fully open or closed position, increase the force by turning the force control slightly clockwise.
3. Perform the “Obstruction Test” after every limit, speed, and force setting adjustment see page 25.

Settings 1-3: Fixed force settings (gate will not adjust due to gate wear or temperature changes).

Settings 4-10: Automatically increase the force due to gate wear or temperature changes.

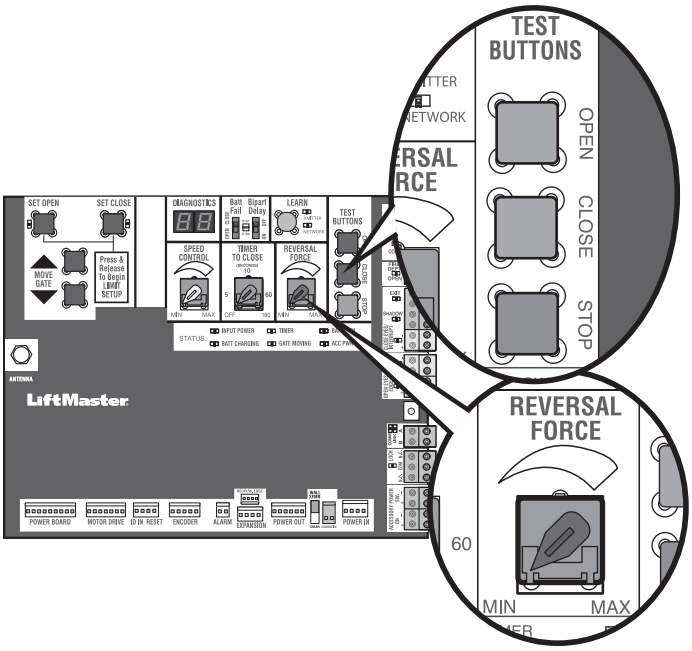

Adjust the Limits

After both limits are set and the operator is ready to run, one limit can be adjusted independently from the other by following steps 1-3 of the Initial Limit and Force Adjustment section.

After any limit adjustment:

1. **Cycle the gate open and close to automatically relearn the forces.**
2. **Perform the *Obstruction Test*, see page 25.**

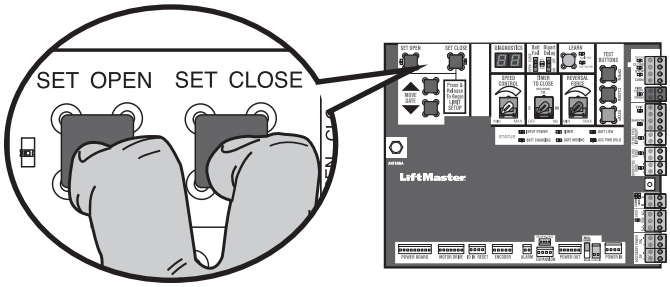

Obstruction Test

The operator is equipped with an inherent (built in to the operator) obstruction sensing device. If the gate encounters an obstruction during motion, the operator will reverse direction of the gate and then stop. The following procedure will test ONLY the inherent (built in to the operator) obstruction sensing device:

1. Open and close the gate with the TEST BUTTONS, ensuring that the gate is stopping at the proper open and close limit positions.
2. Either place an object between the open gate and the fixed closed catch post ***or*** obstruct the gate by hand. Make sure that any external entrapment protection devices, such as an edge or photoelectric sensor will NOT be activated by the object or by hand.
3. Run the gate in the close direction. The gate should stop and reverse upon contact with the object or hand. If the gate does not reverse, reduce the force setting by turning the force control slightly counter-clockwise. The gate should have enough force to reach both the open and close limits, but MUST reverse after contact with an object or hand.
4. Repeat the test for the open direction.

Test the operator after any adjustments are made.

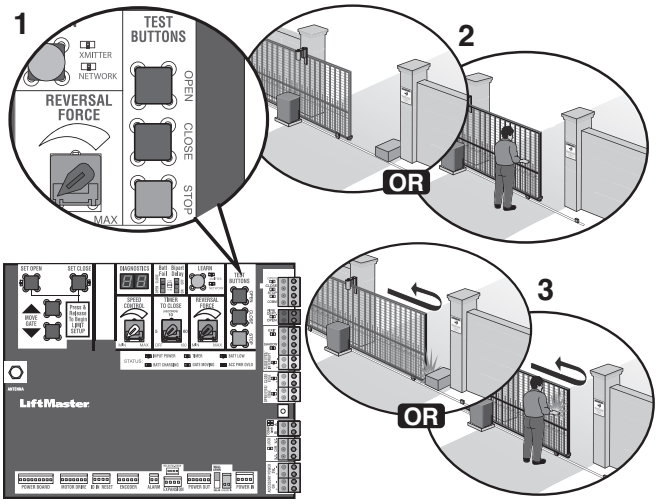

Remote Controls (Not Provided)

A total of 50 Security+ 2.0® remote controls or KPW250 keypads and 2 keyless entries (1 PIN for each keyless entry) can be programmed to the operator. When programming a third keyless entry to the operator, the first keyless entry will be erased to allow the third keyless entry to be programmed. When the operator's memory is full it will exit the programming mode and the remote control will not be programmed. The memory will need to be erased before programming any additional remote controls. ***NOTE:*** *If installing an 86LM to extend the range of the remote controls DO NOT straighten the antenna.*

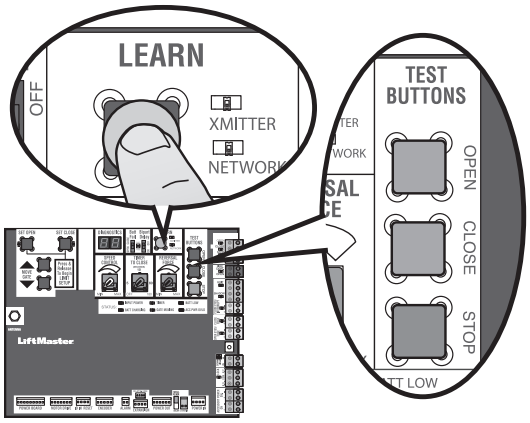

There are 3 different options for programming the remote control depending on how you would like the remote control to function. Choose a programming option:

OPTION	DESCRIPTION	PROGRAMMING STEPS
Single button as OPEN only	Program a single button on the remote control for open only. The Timer-to-Close can be set to close the gate.	1. Press and release the LEARN button (operator will beep and green XMITTER LED will light). ***NOTE:*** *The operator will time out of programming mode after 30 seconds.* 2. Press the OPEN button. 3. Press the remote control button that you would like to program.
Single button (SBC) as OPEN, CLOSE, and STOP	Program one remote control button as an open, close, and stop.	1. Press and release the LEARN button (operator will beep and green XMITTER LED will light). ***NOTE:*** *The operator will time out of programming mode after 30 seconds.* 2. Press the remote control button that you would like to program.
Three separate buttons as OPEN, CLOSE, and STOP	Program each remote control button as an open, close, and stop.	1. Press and release the LEARN button (operator will beep and green XMITTER LED will light). ***NOTE:*** *The operator will time out of programming mode after 30 seconds.* 2. Press the OPEN, CLOSE, or STOP button, depending on the desired function. 3. Press the remote control button that you would like to program.

The operator will automatically exit learn mode (operator will beep and green XMITTER LED will go out) if programming is successful. To program additional Security+ 2.0® remote controls or remote control buttons, repeat the programming steps above.

Entering programming mode using external reset switch or 3-button control station:

1. Make sure gate/door is closed.
2. Give the operator an OPEN command.
3. To put the operator into high band programming mode, give the operator an OPEN command. Within 30 seconds, when the gate is at the open limit, toggle the reset switch between RESET and NORMAL OPERATION three times or push the button on the control station three times. ***NOTE:*** *The operator will time out of programming mode after 30 seconds.*

NOTICE: This device complies with Part 15 of the FCC rules and Industry Canada's license-exempt RSSs. Operation is subject to the following two conditions: (1) this device may not cause harmful interference, and (2) this device must accept any interference received, including interference that may cause undesired operation.
Any changes or modifications not expressly approved by the party responsible for compliance could void the user's authority to operate the equipment.
This device must be installed to ensure a minimum 20 cm (8 in.) distance is maintained between users/bystanders and device.
This device has been tested and found to comply with the limits for a Class B digital device, pursuant to part 15 of the FCC rules and Industry Canada ICES standard. These limits are designed to provide reasonable protection against harmful interference in a residential installation. This equipment generates, uses and can radiate radio frequency energy and, if not installed and used in accordance with the instructions, may cause harmful interference to radio communications. However, there is no guarantee that interference will not occur in a particular installation. If this equipment does cause harmful interference to radio or television reception, which can be determined by turning the equipment off and on, the user is encouraged to try to correct the interference by one or more of the following measures:
- Reorient or relocate the receiving antenna.
- Increase the separation between the equipment and receiver.
- Connect the equipment into an outlet on a circuit different from that to which the receiver is connected.
- Consult the dealer or an experienced radio/TV technician for help.

LiftMaster Internet Gateway (not provided)

To program the operator to the LiftMaster Internet Gateway:

1. Connect the ethernet cable to the LiftMaster Internet Gateway and the router.
2. Connect power to the LiftMaster Internet Gateway.
3. Download the myQ® App.
4. Set up an account and follow the app instructions to add your gate operator.
5. The LiftMaster Internet Gateway will pair to the operator if it is within range and the operator will beep if programming is successful.

The gate operator can then be controlled through the myQ® App.

CAPXL Connected Access Portal

The CAPXL can communicate wirelessly to LiftMaster® UL325 2016 gate operators to send open commands, monitor gate position, and send email notifications if an error occurs in the operator (email notifications are configured in myQ® Business™). Up to 8 gate operators can be paired with the CAPXL - one for each primary and auxiliary relay. If using dual gates, program the CAPXL to the primary operator.

To Program the CAPXL:

1. Enter Admin Mode - Flip dipswitch #1 to the ON position to enter Admin Mode. ***NOTE:*** *For new installations press the login button without entering information in the Admin Username and Admin Password fields.*

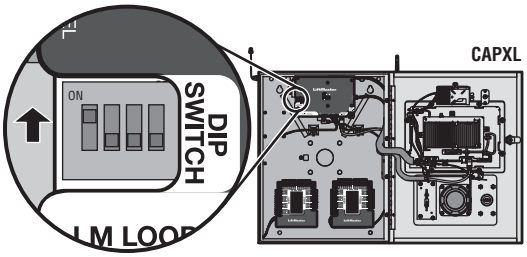

2. Select Outputs and Relay - Select the Outputs tab. Then select the desired relay on the left-hand side (1 through 4).

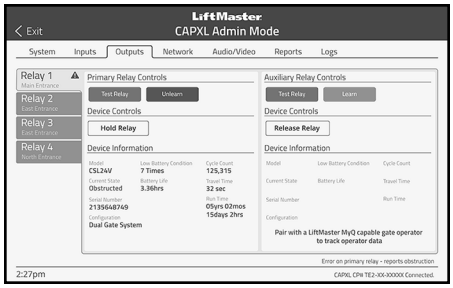

3. Press LEARN button on gate operator - Press and release the LEARN button on the primary operator. The green XMITTER LED will light. ***NOTE:*** *The operator will time out of programming mode after 180 seconds.*

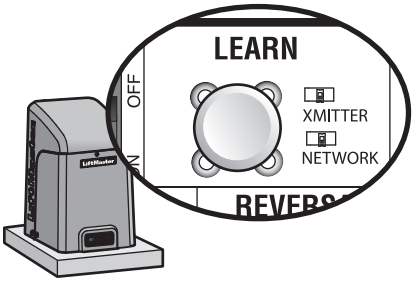

4. Press LEARN button on gate operator again - Press and release the LEARN button again on the primary operator. The yellow NETWORK LED will light.

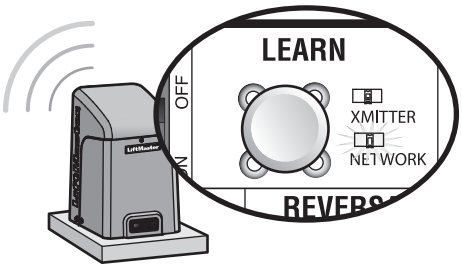

5. Select LEARN on display - Select the LEARN button on the display and the Learn button will go from blue to red. The gate operator and the CAPXL will beep once and the NETWORK LED on the gate operator will turn off indicating programming is successful. ***NOTE:*** *4 beeps/blinks indicate you are not programming to the primary operator. Reattempt programming from the other operator.*

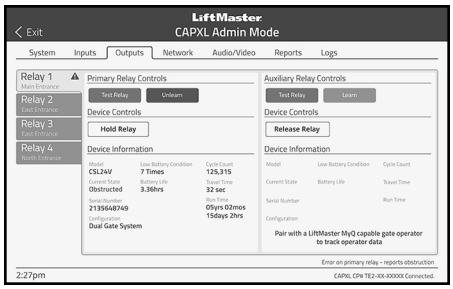

6. Validate - Validate functionality by selecting Test Relay on the CAPXL display.

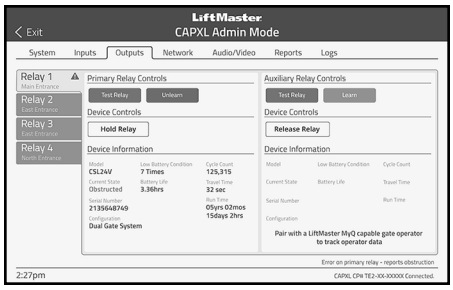

For more information refer to the CAPXL documentation.

myQ® Business™:

To find out more on how to simply secure all of your access points with an easy to manage integrated system, myQ Business, please visit: www.myqbusiness.com.

Erase All Codes

1. Press and release the LEARN button (operator will beep and green XMITTER LED will light).
2. Press and hold the LEARN button again until the green XMITTER LED flashes and then release the button (approximately 6 seconds). All remote control codes are now erased.

Erase Limits

1. To erase the limits, press and hold the SET OPEN and SET CLOSE buttons simultaneously (5 seconds) until both the SET OPEN and SET CLOSE LEDs blink rapidly and the operator beeps.
2. Release the buttons and the SET OPEN and SET CLOSE LEDs will blink slowly indicating the limits will need to be set.

Constant Pressure Override (CPO)

Constant Pressure Override is for use with KPW5 and KPW250 keypads (not provided). The KPW5/KPW250 wireless commercial keypads are security keypads and can only be programmed to ONE gate operator (see the KPW5/KPW250 manual for complete programming instructions).

The Constant Pressure Override feature is intended to temporarily override a fault in the entrapment protection system, in order to operate the gate until the external entrapment protection device is realigned or repaired. Use the feature only in line of sight of the gate when no obstructions to travel are present. External entrapment protection devices include LiftMaster monitored photoelectric sensors and LiftMaster monitored wired and wireless edge sensors. Be sure to repair or replace these devices promptly if they are not working properly.

To use Constant Pressure Override:

1. Enter a valid 4-digit PIN.
2. Press and hold # for 5 seconds to enter CPO. Continue to hold # to keep the operator in motion. A continuous tone will sound until limit is met and/or # is released.
3. The operator will stop when either the operator reaches a limit or the user releases #.

Gate Hold Open Feature

The gate hold open feature will disable the timer and keep the gate at the open limit. The gate hold open feature can be activated with the reset switch, see page 31 or on the KPW5 and KPW250 keypads (not provided).

To use the gate hold open feature on a keypad:

1. Enter a valid 4-digit PIN when the gate is at the open limit and the timer is running
2. The operator will chirp indicating the timer is canceled.

To restart the gate:

1. Re-enter the 4-digit PIN
2. Activate a hard input or a programmed remote

To Remove and Erase Monitored Entrapment Protection Devices

1. Remove the entrapment protection device wires from the terminal block.
2. Press and release the SET OPEN and SET CLOSE buttons simultaneously. The SET OPEN and SET CLOSE LEDs will turn on (entering learn limit mode).
3. Press and release both SET OPEN and SET CLOSE buttons again to turn off the SET OPEN and SET CLOSE LEDs (exiting learn limit mode).

Gate Operator Setup Examples

The following are example setups for the gate operator. Your specific site requirements may be different. Always setup the operator system to the site requirements, including all necessary entrapment protection devices.

RESIDENTIAL: One to four residential homes sharing a gated entrance/exit, allowing vehicle access trumps security concerns

COMMERCIAL/GENERAL ACCESS: A residential community (more than four homes) having one or more gated entrances/exits, allowing vehicle access trumps security concerns

COMMERCIAL: Business site where security (gate closed) is important

INDUSTRIAL: Large business site where security is required

SETTING	RESIDENTIAL	COMMERCIAL/GENERAL ACCESS	COMMERCIAL	INDUSTRIAL
Quick Close switch setting	Normally set to OFF. Normal gate close (timer or control).	Normally set to OFF. Normal gate close (timer or control).	Normally set to OFF. Normal gate close (timer or control).	Set to ON, so that gate closes immediately after vehicle passes CLOSE EYES/Interrupt loop.
AC Fail Open switch setting	Normally set to BATT. Run on battery if AC power fails.	Normally set to BATT. For local jurisdiction requirement, set to OPEN so that the gate will open approximately 15 seconds after AC power fail.	Normally set to BATT. Run on battery if AC power fails.	Normally set to BATT. Run on battery if AC power fails.
Low Battery switch setting	Normally set to OPEN. If powered from battery and battery is low, gate automatically opens and stays open.	Normally set to OPEN. If powered from battery and battery is low, gate automatically opens and stays open.	Normally set to CLOSE. If powered from battery and battery is low, gate stays closed.	Normally set to CLOSE. If powered from battery and battery is low, gate stays closed.
Anti-Tail switch setting	Normally set to OFF. CLOSE EYES/Interrupt loop reverses a closing gate.	Normally set to OFF. CLOSE EYES/Interrupt loop reverses a closing gate.	Set to ON. In attempt to prevent vehicle tail-gating, CLOSE EYES/ Interrupt loop pauses a closing gate.	Set to ON. In attempt to prevent vehicle tail-gating, CLOSE EYES/ Interrupt loop pauses a closing gate.
Bipart Delay switch setting	For DUAL-GATE site, set to ON for gate that delays upon opening.	For DUAL-GATE site, set to ON for gate that delays upon opening.	For DUAL-GATE site, set to ON for gate that delays upon opening.	For DUAL-GATE site, set to ON for gate that delays upon opening.
Aux Relay Out – Open Limit Switch	Typically not required.	Use with SAMS (Sequence Access Management System).	1. Use with SAMS (Sequence Access Management System). 2. Connect "Gate Open" indicator (e.g. light).	1. Use with SAMS (Sequence Access Management System). 2. Connect "Gate Open" indicator (e.g. light).
Aux Relay Out – Close Limit Switch	Typically not required.	Typically not required.	Connect "Gate Close/Secure" indicator (e.g. light).	Connect "Gate Close/Secure" indicator (e.g. light).
Aux Relay Out – Gate Motion	Attach alert signal (audible or visual alert system).	Attach alert signal (audible or visual alert system).	Attach alert signal (audible or visual alert system).	Attach alert signal (audible or visual alert system).
Aux Relay Out – Pre-Motion Delay	Attach alert signal (audible or visual alert system).	Attach alert signal (audible or visual alert system).	Attach alert signal (audible or visual alert system).	Attach alert signal (audible or visual alert system).
Aux Relay Out – Power	Attach visual alert to know when system is charging batteries (i.e. not running on batteries).	Attach visual alert to know when system is charging batteries (i.e. not running on batteries).	Attach visual alert to know when system is charging batteries (i.e. not running on batteries).	Attach visual alert to know when system is charging batteries (i.e. not running on batteries).
Aux Relay Out – Tamper (Slide Gates Only)	Attach alert signal (audible or visual alert system) to indicate if gate is manually tampered with by being pushed off of close limit.	Attach alert signal (audible or visual alert system) to indicate if gate is manually tampered with by being pushed off of close limit.	Attach alert signal (audible or visual alert system) to indicate if gate is manually tampered with by being pushed off of close limit.	Attach alert signal (audible or visual alert system) to indicate if gate is manually tampered with by being pushed off of close limit.
Cycle Quantity Feedback	Use during servicing only to determine operator cycles.	Use during servicing only to determine operator cycles.	Use during servicing only to determine operator cycles.	Use during servicing only to determine operator cycles.
Fire Dept Open Input	Typically not required.	Connect emergency access system (Knox box switch, SOS system, etc.).	Typically not required.	Typically not required.
Heater Accessory (Model HTR)	The heater keeps the gearbox and batteries at a suitable temperature when the outside temperature is below -4°F. The thermostat MUST be set between 45°F and 60°F to ensure proper gate operation.	The heater keeps the gearbox and batteries at a suitable temperature when the outside temperature is below -4°F. The thermostat MUST be set between 45°F and 60°F to ensure proper gate operation.	The heater keeps the gearbox and batteries at a suitable temperature when the outside temperature is below -4°F. The thermostat MUST be set between 45°F and 60°F to ensure proper gate operation.	The heater keeps the gearbox and batteries at a suitable temperature when the outside temperature is below -4°F. The thermostat MUST be set between 45°F and 60°F to ensure proper gate operation.

Control Board Overview

1 SET OPEN Button: The SET OPEN button sets the OPEN limit. See *Adjustment* section.

2 SET CLOSE Button: The SET CLOSE button sets the CLOSE limit. See *Adjustment* section.

3 DIAGNOSTICS Display: The diagnostics display will show the operator type, firmware version, and codes. The operator type will display as "HD" or "HF" followed by a "24" which indicates the operator type as HDSL24UL or HDFSL24UL. The firmware version will show after the operator type, example "1.2".

4 BATT FAIL:

- When AC power is OFF and battery voltage is critically low the gate will latch at a limit until AC power is restored or batteries voltage increases.
- Option select switch set to OPEN forces gate to automatically open and then latch at the OPEN limit until AC power is restored or battery voltage increases.
- Option select switch set to CLOSE forces gate to latch at CLOSE limit if at CLOSE limit or on next CLOSE command until AC power restored or battery voltage increases.
- Constant pressure on a hard command input overrides to open or close the gate.
- Critically low battery is less than 23 Vdc.

5 BIPART DELAY Switch: The LOCK/BIPART DELAY switch is used only for dual gates. See *Bipart delay/synchronized closed* page 20.

6 LEARN Button: The LEARN button is for programming remote controls and the network.

7 TEST BUTTONS: The TEST BUTTONS will operate the gate (OPEN, STOP and CLOSE).

8 MOVE GATE Buttons: The MOVE GATE buttons will either open or close the gate when the operator is in Limit setting mode. See *Adjustment* section.

9 SPEED CONTROL dial: Sets maximum gate speed, see *Speed Control* page 24.

10 TIMER-TO-CLOSE dial: The TIMER-TO-CLOSE (TTC) dial can be set to automatically close the gate after a specified time period. The TTC is factory set to OFF. If the TTC is set to the OFF position, then the gate will remain open until the operator receives another command from a control. Rotate the TIMER-TO-CLOSE dial to the desired setting. The range is 0 to 180 seconds, 0 seconds is OFF. ***NOTE:*** *Any radio command, single button control, or CLOSE command on the control board prior to the TTC expiring will close the gate. The TTC is reset by any signals from the open controls, loops, close edges, and close photoelectric sensors (IR's).*

11 REVERSAL FORCE dial: The REVERSAL FORCE dial fine tunes the force, see *Fine Tune the Force* page 24.

12 STATUS LEDs: The STATUS LEDs indicate the status of the operator. See Status LED Chart in the *Troubleshooting* section.

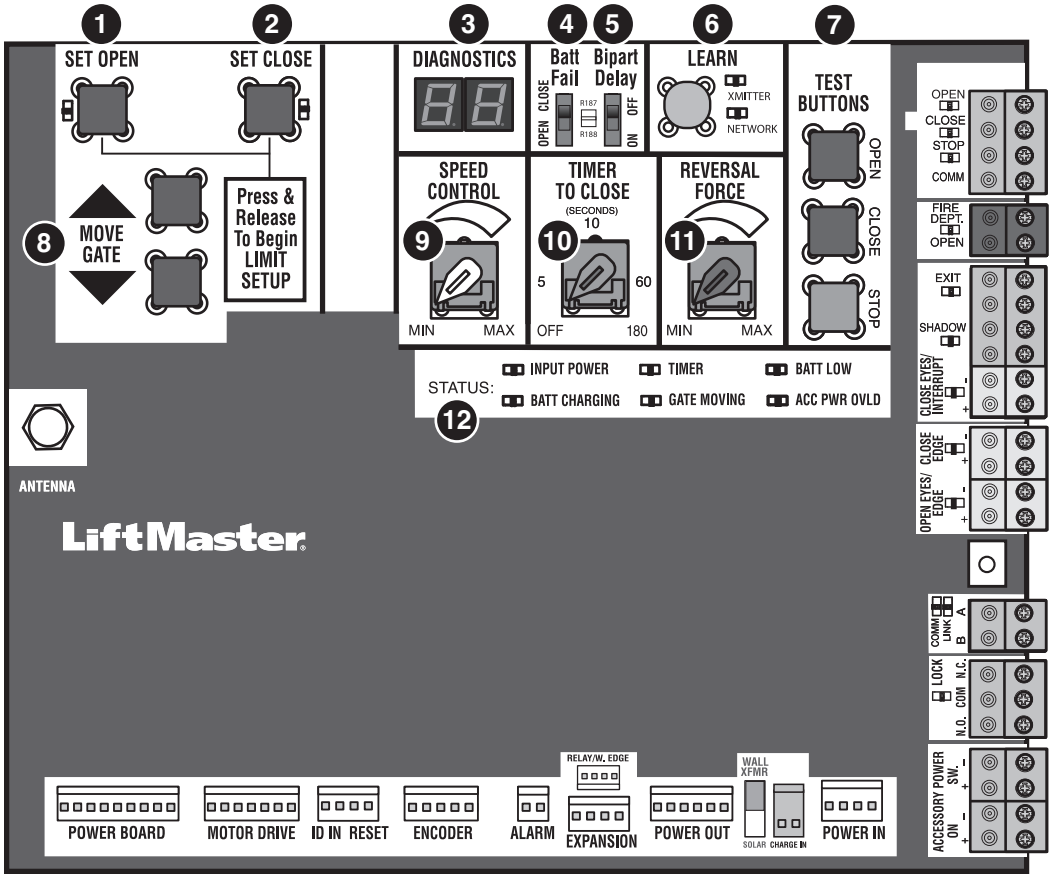

Manual Disconnect

1. Set the reset switch to the RESET position.
2. Pull the manual release handle.

To resume normal function, release the handle and set the switch to NORMAL OPERATION. On a dual gate application the handle must be released on both operators.

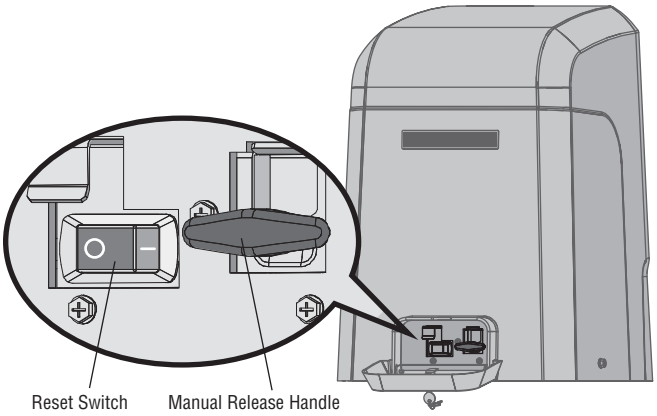

Reset Switch

The reset switch has the following functions:

- Set the switch to the RESET position to disable gate operation. Use this switch before servicing the gate or manually disconnecting the gate. The stop LED will be illuminated.
- To hold the gate open, run the gate to the open position and then set the switch to the RESET position.
- Toggle the reset switch to RESET then back to NORMAL OPERATION when the operator alarm has been set off, see page 32.
- To put the operator into high band programming mode, give the operator an OPEN command. Within 30 seconds, when the gate is at the open limit, toggle the reset switch between RESET and NORMAL OPERATION three times.

Relay Board and Terminal Block Access
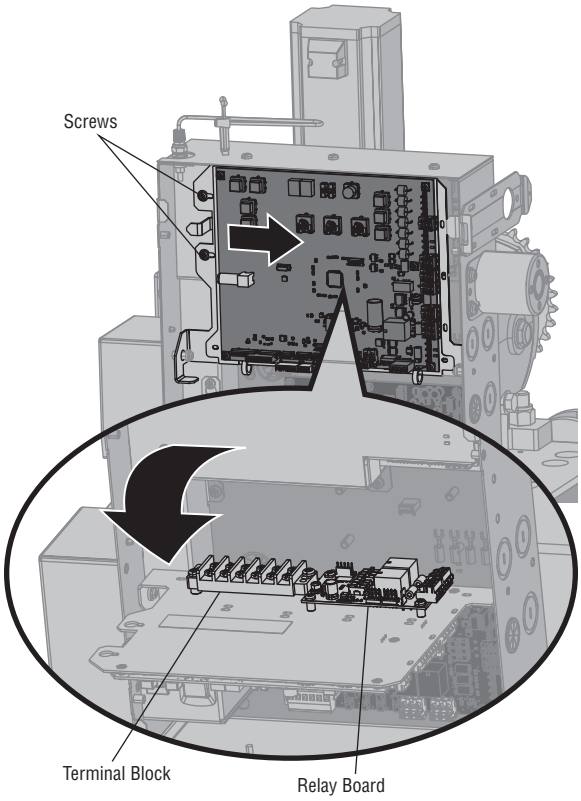
To access the relay board and terminal block, loosen the two screws of the control board bracket, slide the whole bracket to the right, then swing open.