EN1263 Motion Detector with Pet Immunity

Installation and Operation Manual

1 Overview

The EN1263 motion detector with pet immunity is an advanced, fully supervised low-current wireless motion detector that includes an FW2 transceiver for reliable system operation combined with the most advanced mirror optics detection method. It features pet immunity up to 55 pounds (25 kg).

1.1 Inovonics Contact Information

For product and installation videos visit us at www.inovonics.com/videos or use the QR code below.

If you have any problems with this procedure, contact Inovonics technical support:

- E-mail: support@inovonics.com.
- Phone: (800) 782-2709; (303) 939-9336.

2 Installation and Startup

2.1 Installation Notes

- These products are designed to be maintained by professional security technicians
- Products are tested for indoor use
- All products should be manually tested weekly

2.2 Mount the Housing and Install the Battery

1. Loosen the captive housing screw.
2. Open the housing.

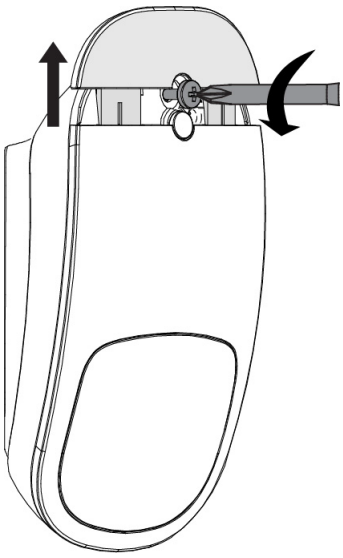

Figure 1 Open the housing

3. Remove the EN1263 from the mounting bracket per Figure 2.

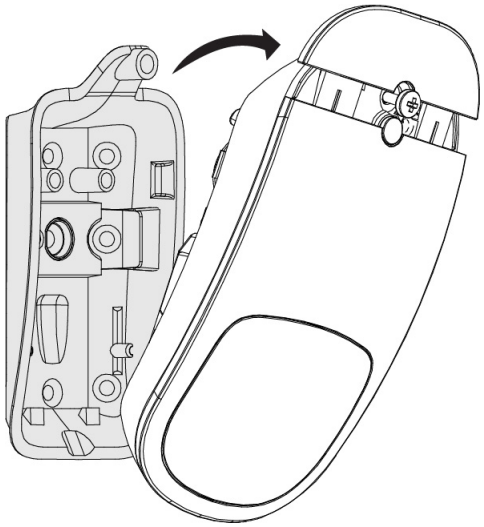

Figure 2 Remove the EN1263 from the mounting bracket

4. Noting the detection coverage in Figure 3, determine mounting location.
   - Avoid areas facing direct sunlight, areas where areas that may change temperature rapidly, and areas where there are air ducts or substantial airflows.
   - The recommended mounting height is 6.5 feet to 7.5 feet (2.1 to 2.3 m).

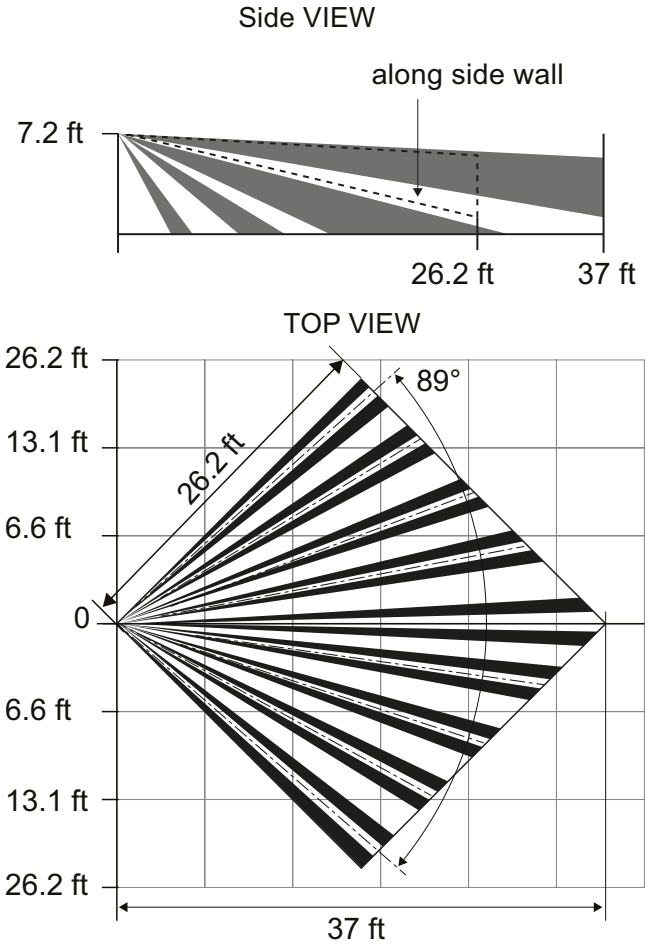

Figure 3 EN1263 detection coverage area

5. Use the included three mounting screws to mount the EN1263.
   - To mount on the wall, see Figure 4.
   - To mount in a corner, see Figure 5.

Note: The black arrows represent recommended mounting screw locations; the gray arrows represent optional mounting screw locations should the recommended locations be unavailable.

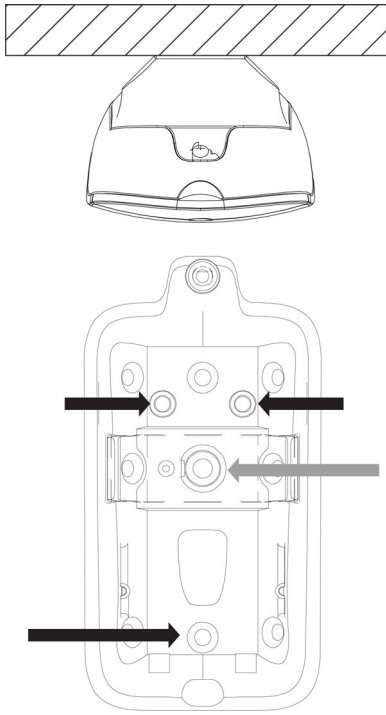

Figure 4 Wallmount configuration

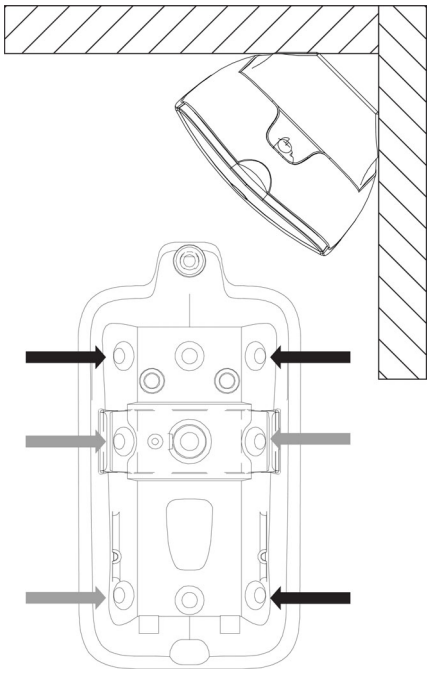

Figure 5 Cornermount configuration

6. Install the battery per Figure 6.

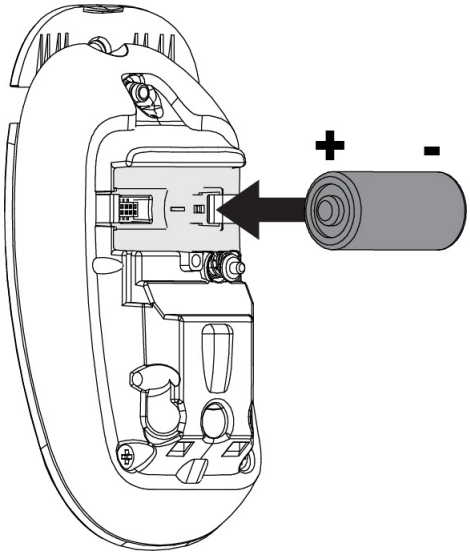

Figure 6 Install the battery

2.3 Select Pulse Count

The pulse count options provides control for difficult operating environments. Automatic pulse count is recommended for reliable operation in environments subject to temperature fluctuation that can cause false alarms. The single pulse count mode is more sensitive to minor temperature variations, and should be used in sites where variant heat sources will not cause alarms. Automatic pulse count is the factory default because it allows more reliable operation in environments subject to temperature fluctuation. To select pulse count:

1. Press the tamper button five times within three seconds.

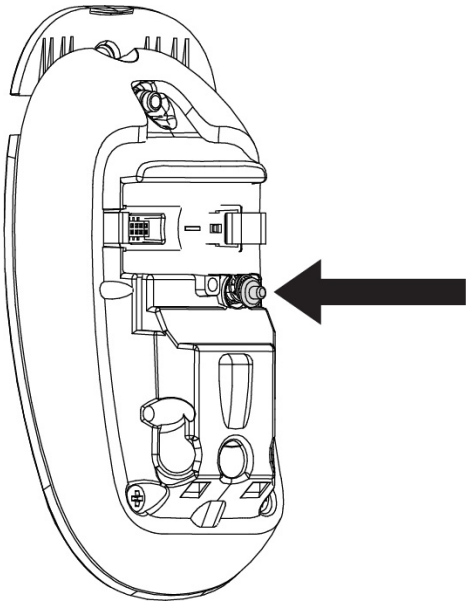

Figure 7 Press the tamper button

2. Wait for the green LED to blink five times, then:
   - Press the tamper button one time within three seconds to select single pulse count.
   - Press the tamper button two times within three seconds to select automatic pulse count.
3. Confirm your selection.
   - The green LED will blink once to indicate single pulse count has been selected; twice to confirm automatic pulse count has been selected.

2.4 Select Fixed/Variable Sleep Time

The sleep time jumper setting provides control for normal or high-traffic operating environments. When set to fixed, if the EN1263 senses motion, it

will transmit an alarm, then enter sleep mode for 180 seconds; if motion is sensed when the sleep time has expired, the EN1263 will transmit another alarm. Fixed sleep time is recommended for normal operating environments, and is the default setting as shipped from the factory. When set to variable, if the EN1263 senses motion, it will transmit an alarm, then enter sleep mode for 180 seconds; if motion is sensed before the sleep time has expired, the EN1263 will restart the 180 second interval. To select sleep time:

1. Press the tamper button four times within three seconds.
2. Wait for the green LED to blink four times, then:
   - Press the tamper button one time within three seconds to select variable sleep time.
   - Press the tamper button two times within three seconds to select fixed sleep time.
3. Confirm your selection.
   - The green LED will blink once to indicate variable sleep time has been selected; twice to confirm fixed sleep time has been selected.

2.5 Register the Transmitter

The EN1263 must be registered with the system receiver in order to be monitored and supervised. Each EN1263 has a unique factory-programmed identification number. Refer to the receiver, network coordinator or control panel installation instructions for details on registering a transmitter.

1. When prompted to reset the transmitter, press the tamper button.
2. Replace the housing cover.

Caution: The EN1263 should be tested after registration to ensure operation. To test the EN1263, activate each of the conditions and ensure an appropriate response.

3 Test the EN1263

When in walk test mode the test LED will light red every time the EN1263 senses motion. The unit will not transmit alarm signals during this test period. Once initiated, the walk test will last for ten minutes and then the EN1263 will automatically return to normal operation. To initiate a walk test:

1. Press the tamper button three times within three seconds.

Note: The test LED only lights red during the walk test.

4 Specifications

Dimensions: 4.25” x 2.28” x 1.7” (108 mm x 58 mm x 43 mm).
Weight: 3.2 ounces (90 grams)
Operating temperature: 32°F to 120°F (0°C to 49°C).
Humidity: 0 - 93% (non-condensing).
Battery (BAT604): CR123A or equivalent.
Typical battery life: Two years.
Tamper: Housing and/or Wall (optional).
PIR: Quad Element PIR.
Coverage area: 26ft (8m).
Warm up period: 40 seconds.
Check-in time: Three minutes.

5 Television and Radio Interference

This equipment has been tested and found to comply with the limits for a Class B digital device, pursuant to Part 15 of the FCC Rules. These limits are designed to provide reasonable protection against harmful interference in a residential installation. This equipment generates, uses and can radiate radio frequency energy and, if not installed and used in accordance with the instructions, may cause harmful interference to radio communications. However, there is no guarantee that interference will not occur in a particular installation. If this equipment does cause harmful interference to radio or television reception, which can be determined by turning the equipment off and on, the user is encouraged to try to correct the interference by one or more of the following measures:

- Reorient or relocate the receiving antenna.
- Increase the separation between the equipment and receiver.
- Connect the equipment into an outlet on a circuit different from that to which the receiver is connected.
- Consult the dealer or an experienced radio/TV technician for help.

6 FCC Part 15 and Innovation, Science and Economic Development Canada (ISED) Compliance

This device complies with part 15 of the FCC Rules, and ISED license-exempt RSS standard(s). Operation is subject to the following two conditions: (1) this device may not cause interference, and (2) this device must accept any interference that may cause undesired operation of the device.

Le présent appareil est conforme aux CNR Innovation, Sciences et Développement économique Canada applicables aux appareils radio exempts de licence. L'exploitation est autorisée aux deux conditions suivantes: (1) l'appareil ne doit pas produire de brouillage, et (2) l'utilisateur de l'appareil doit accepter tout brouillage radioélectrique subi, même si le brouillage est susceptible d'en compromettre le fonctionnement.

Caution: Changes or modifications not expressly approved by the party responsible for compliance could void the user's authority to operate the equipment.

7 Radiation Exposure Limits

7.1 FCC

This equipment complies with FCC radiation exposure limits set forth for an uncontrolled environment. In order to avoid the possibility of exceeding the FCC radio frequency exposure limits, human proximity to the antenna shall not be less than 20 cm during normal operation and must not be co-located or operating in conjunction with any other antenna or transmitter.

7.2 ISED

This equipment complies with ISED RSS-102 radiation exposure limits set forth for an uncontrolled environment. This transmitter must be installed to provide a separation distance of at least 20 cm from all persons and must not be co-located or operating in conjunction with any other antenna or transmitter.

Cet équipement est conforme avec ISED RSS-102 des limites d'exposition aux rayonnements définies pour un environnement non contrôlé. Cet émetteur doit être installé à au moins 20 cm de toute personne et ne doit pas être colocalisé ou fonctionner en association avec une autre antenne ou émetteur.