6 Dolphin® QuadCharger

The Dolphin® QuadCharger provides intelligent battery management for NiMH (Nickel Metal Hydride) Dolphin battery packs.

The charger fully charges as many as four NiMH batteries in 2.5 hours. Charging slots work independently to control charging and discharging of individual battery packs. The QuadCharger is compatible with all models in the Dolphin® family of hand held computers.

As battery packs charge, the charging circuitry uses a three-step process that senses changes in temperature and voltage and drops to a trickle charge when the packs are fully charged. This feature allows the user to leave batteries in the charger indefinitely, which maintains the batteries at peak capacity without damage. The charger also resets and calibrates battery pack data to accurately show battery status on the Dolphin display.

The QuadCharger also conditions and calibrates batteries for longer, more consistent performance.

Dolphin QuadCharger Parts and Function

Top Panel

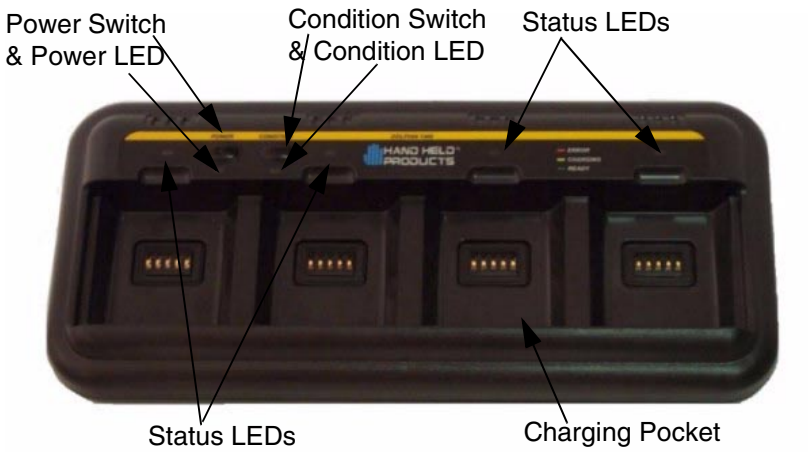

Charging Pocket

The QuadCharger has four charging pockets for charging and/or conditioning batteries for your Dolphin terminal.

Power Switch

Press and hold the Power Switch for approximately one second, then release, to turn on the Dolphin QuadCharger. The Power Switch LED is green when the unit is on. To turn the charger off, press and hold the Power Switch for about two seconds and then release. This feature prevents the unit from being accidently turned off during use or on when not in use.

Condition Switch

Press the Condition Switch to start a battery conditioning cycle. The orange Conditon Switch LED flashes during the conditioning cycle.

Status LEDs

A Status LED is located above each of the four battery pockets.

Rear Panel

Rear Panel of Dolphin Quad Charger

Power Supply Connector

Use this connector to attach a power supply to the Quad Charger. The universal power supply accepts input voltages between 90-265 volts.

Communications Port

The communications port is for factory use only in programming the Quad Charger.

Charging Batteries In The QuadCharger

Follow these steps to charge batteries in the QuadCharger:

1. Set up the charger for use
2. Supply power
3. Insert batteries

CAUTION: Do not attempt to recharge any battery pack in the Dolphin QuadCharger that is not manufactured by HHP especially for this device. To do so will void your warranty and could damage the Dolphin QuadCharger.

Setting Up The QuadCharger

The Dolphin QuadCharger should be setup on any dry, stable surface. DIN rail slots on the bottom panel allow the charger to be wall or desktop-mounted for easily adapting the unit to your environment.

The charger must be connected to a power source for any type of operation.

Supplying Power To The QuadCharger

CAUTION: Using a non-HHP power cord voids your warranty and could result in serious damage to the Dolphin QuadCharger's circuitry.

Locate the AC power cord that came with the Dolphin QuadCharger. Plug the cord into the power supply connector on the back of the unit and, then plug the power cord into a wall socket.

Press and hold the Power Switch for approximately one second, then release, to turn on the Dolphin QuadCharger. The GREEN power LED will illuminate and the charger will undergo a self-diagnostic test.

Inserting and Removing Battery Packs

To insert a battery pack, place the end of the battery without the locking tab into the bottom of the charging pocket and snap the battery into place with a hinging motion. Once the battery is properly seated, the orange status LED for that particular pocket will illuminate.

For best results, battery packs should be at room temperature before recharging them; temperature has a marked effect on charging. The recommended temperature range is 50° to 95° F (10° to 35° C).

The LEDs indicate the charging status of batteries as described in the chart shown on the next page:

Status LED	Description
Green	Charging is complete and battery is ready for service.
Orange	Battery is being charged at a maximum charge rate
Red	Error was encountered during charge cycle

Status of LEDs during Charging Cycle

To remove a battery pack, push the locking tab down and pull the battery out from the charging pocket with a hinging motion.

Servicing The Battery Pack

To service battery packs, insert batteries into the charging pockets and press the Condition button. The Condition LED will flash during the conditioning cycle. This starts an automatic process where batteries are completely discharged and then recharged to full capacity in eight hours. The Condition and Calibrate cycle resets and calibrates battery data so that the user gets longer, more consistent performance from the batteries. HHP recommends that battery packs should be serviced, or calibrated once a month.

Because the Dolphin QuadCharger is accumulating battery pack information during the entire Condition and Calibrate cycle, it is important not to remove the battery until the cycle has been completed and the Condition LED is no longer flashing. Batteries inserted after the “Condition and Calibrate” switch has been depressed will receive a standard charge. The chart below describes the Status LEDs during the Condition and Calibrate cycle:

Status LED	Description
Solid Green	Cycle is complete. Battery remains in trickle charge until removed from the charger.
Flashing Orange	Battery is being conditioned
Solid Red	Error was encountered during charge cycle

Status of LEDs during Condition and Calibrate Cycle

Storing Batteries

To maintain top performance from batteries, follow the guidelines below when storing them:

Avoid storing batteries outside of the specified range of -4 to 104° F (-20 to 40°C) or in extremely high humidity.

For prolonged storage, do not keep batteries stored in a charger that is connected to a power source.

During long-term storage, battery deactivation may tend to occur which may cause charging to stop early during recharging after storage. This issue can be handled by charging and discharging the battery several times. Also, the first charging after prolonged storage may yield a lower than normal capacity. While this will vary depending on the storage conditions, charging and discharging the battery several times will almost completely restore capacity.

Troubleshooting

If you encounter problems with the Dolphin QuadCharger, refer to chart below for possible solutions. If problems persist, please contact HHP Technical Support.

Problem	**Issue**
The ‘CHARGING” LED does not come on when I insert a battery pack into the Dolphin QuadCharger	Check the power connections on the Dolphin QuadCharger. Also check to ensure the POWER switch is ON and the battery pack is properly seated.
The red status LED comes on during charging.	Try to charge the battery in one of the other charging pockets. If the red Status LED comes on again, then the problem is associated with the battery pack. If the red status stays with the charging pocket, the problem is associated with the charging circuity.
The red status LED remains on without a battery in the charging pocket.	An error occurred during the self-diagnostic test for that particular charging pocket. Call HHP Product Service and request an RMA. See Chapter 9 for additional warranty and return information.

Power Conditioning

The Mobile IntelliBase provides power to the Dolphin terminal to enable the terminal to charge its battery.

Ir/IrDA Optical Communications

The infrared, or Ir communications port, on the Mobile IntelliBase connects with the IrDA port on the Dolphin terminal. With no pins or contacts to break, Ir will work reliably for years. Reliable data communications at speeds of up to 115k baud can be transmitted by the Mobile IntelliBase.

The Mobile IntelliBase infrared connection to the terminal uses IrDA-compliant hardware and software for a standard reliable connection.

Convenient Storage

The Mobile IntelliBase is a safe and convenient storage receptacle for the Dolphin terminal.

Mobile IntelliBase Parts and Functions

Front Panel

The front panel of the Mobile IntelliBase has one slot:

Front Panel of Dolphin Mobile IntelliBase

Dolphin Terminal Well Place the Dolphin in this well to communicate with a host device and to charge the Dolphin's battery.

LEDs There are two LEDs on the front panel of the Mobile IntelliBase.

1. **Dock LED** Turns solid green when the Dolphin Terminal is properly seated into the Dolphin Mobile IntelliBase.

2. **COMM LED** Indicates the status of data transfer between the Host Device and the Dolphin Terminal as described below:

Table 4:

Comm LED	Description
Red LED	Data is being sent from the Host Device to the Dolphin Mobile IntelliBase.
Green LED	Data is being sent from the Dolphin Mobile IntelliBase to the Host Device.
Orange LED	Data is being sent at high data rates.

Rear Panel

Rear Panel of Dolphin Mobile IntelliBase

There is a power supply connector and an RS-232 connector:

Power supply connector Use this connector to attach a power supply to the Mobile IntelliBase. The power supply provides power for communications and battery charging.

RS-232 Communications Port Use a standard serial cable to connect this port to a host RS-232 device.

Bottom Panel of Mobile IntelliBase

A four-position Baud Rate switch, located on the bottom of the Mobile IntelliBase, is used to select the communication baud rate. Switch position and the corresponding baud rates are shown in the chart below.

Table 5: Baud Rate Table For Connecting To PCs

Baud Rate	Switch 1	Switch 2	Switch 3	Switch 4
115200	OFF	ON	ON	ON
57600	ON	OFF	OFF	ON
38400	ON	OFF	ON	ON
19200	ON	ON	OFF	ON
9600	ON	ON	ON	ON

Table 6: Baud Rate Table For Connecting To Modems

Baud Rate	Switch 1	Switch 2	Switch 3	Switch 4
115200	OFF	ON	ON	OFF
57600	ON	OFF	OFF	OFF
38400	ON	OFF	ON	OFF
19200	ON	ON	OFF	OFF
9600	ON	ON	ON	OFF

Powering the Dolphin Terminal

When seated in the Mobile IntelliBase, the Dolphin terminal receives the power it needs to charge the battery and to run its internal circuitry.

The Dolphin terminal can be stored indefinitely in the Mobile IntelliBase without damage to the terminal or the Mobile IntelliBase. Keep the Mobile IntelliBase plugged in so that the Dolphin terminal battery pack stays fully charged.

Charging A Dolphin Terminal

The Mobile IntelliBase supplies charging power to the Dolphin terminal so that the terminal can monitor the charging of its battery pack. This charging method protects the battery from being damaged by overcharging. Therefore, the Dolphin terminal may be stored indefinitely in the Mobile IntelliBase without damage to the terminal, the battery pack, or the Mobile IntelliBase.

To charge a Dolphin terminal, follow these steps:

1. Insert a battery pack into the Dolphin terminal.
2. Place the terminal, imager engine window up and the LCD visible, in the Terminal Well of the Mobile IntelliBase.
3. Let it glide down into the well until it stops.
4. Once the Dolphin terminal is properly seated, the Dock LED on the Mobile IntelliBase will be solid GREEN.

Deep-Cycling Batteries

For maximum battery life, HHP recommends that you deep-cycle (service) the battery **twice** before initial use and once a month thereafter. Since the Dolphin 7400 Mobile Intellibase **does not** have deep-cycling capabilities, it is recommended that you use the Battery Conditioning Utility software, the IntelliBase+ or a Dolphin QuadBattery Charger. See the Battery Management section in Chapter 3 for more information.

Setting Up For Communications with the Mobile IntelliBase

The Mobile IntelliBase RS-232 interface allows the Dolphin terminal to communicate to a personal computer, modem, or any standard RS-232 device using a standard serial cable and communications software.

The IrDA 1.0 software stack is integrated into the Mobile IntelliBase to allow communication between the cradle and devices such as modems or printers that are not IrDA ready or do not communicate with a half duplex serial protocol. This allows any full or half duplex RS-232 device to communicate through the IntelliBase with no IrDA protocol software. See Tables 2 or 3 for the baud rate switch settings.

Installing The Dolphin Mobile IntelliBase

Mounting the Mobile IntelliBase Spring Arm Assembly

The adjustable mounting bracket holds the terminal securely in place and gives the user a variety of options for mounting the Mobile IntelliBase. See the directions below for mounting the bracket.

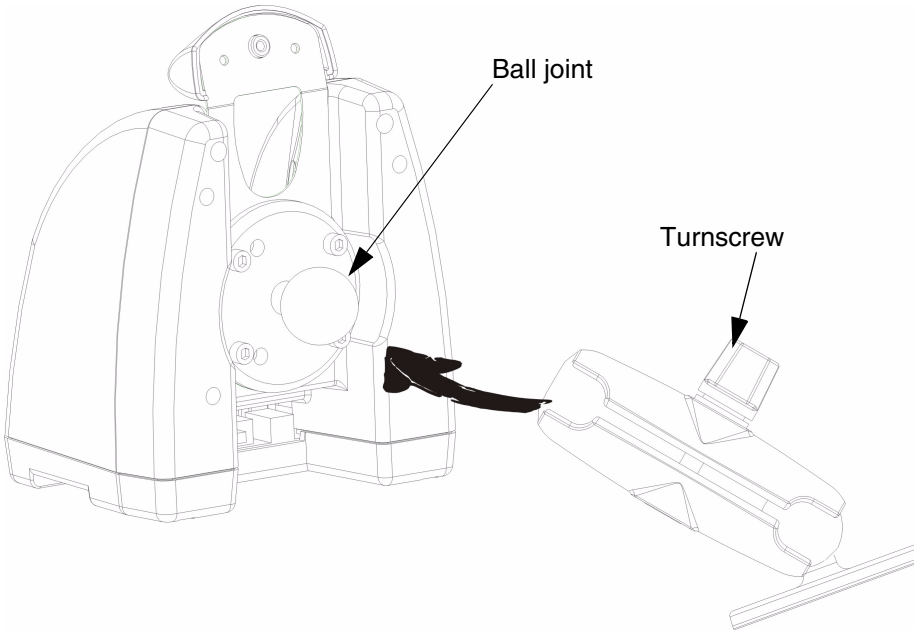

To attach the bracket:

1. Loosen the turnscrew located on the side of the bracket.
2. Attach the bracket to the ball joint on the back of the Mobile IntelliBase and tighten the turnscrew.

Connecting the Cables

Connect the Mobile IntelliBase to the host computer or other device by plugging an RS-232 serial cable into the RS-232 Communications Port on the rear of the Mobile IntelliBase. Plug the other end of the RS-232 serial cable into the correct port on the host RS-232 device.

The wiring of your cable depends on whether the other device is set up as a DCE (Data Communications Equipment) or DTE (Data Terminal Equipment) device.

The Mobile IntelliBase Communication Port is configured as a DCE device. To communicate with a DTE device such as a computer, use a standard (or straight-through) RS-232 cable. To communicate with a DCE device, use either a null modem adapter in line with a standard RS-232 cable, or a null-modem serial cable.

You can make your own cables by following the pin configuration in the chart below. To do so, you must determine if your host RS-232 device is 9-pin or 25-pin, and whether it is configured as a DCE or DTE device.

Pin Configuration

HomeBase /Host Port (DCE) Pin / Input Signal	IBM AT DB9 (DTE)	IBM XT DB25 (DTE)	Modem DB25 (DCE)
2 / (RD)	2	3	2
3 / (TD)	3	2	3
5 / (SG)	5	7	7
4 / (DTR)	4	20	6
6 / (DSR)	6	6	20
7 / (RTS)	7	4	5
8 / (CTS)	8	5	4

Supplying Power to the Dolphin Mobile IntelliBase

The Mobile IntelliBase can be powered from either a 12 or 24 volt DC source. Power is connected to the input power connector located on the rear of the Mobile IntellieBase.

HHP recommends that you leave the Mobile IntelliBase connected to its power source at all times, so that it is always ready to use.

Setting the Baud Rate

After connecting the cables and supplying power to the Mobile IntelliBase, set the baud rate switch. Refer to the Baud Rate Tables earlier in this section for guidance on setting the switch.

Configuring the Dolphin Terminal

The Communication Properties must be configured on Dolphin 7300 terminal in order for it to communicate with the Mobile IntelliBase.

To set Communication Properties:

1. Select **Start>Settings>Control Panel>Communication Settings**.
2. Select the **PC Connection** tab.

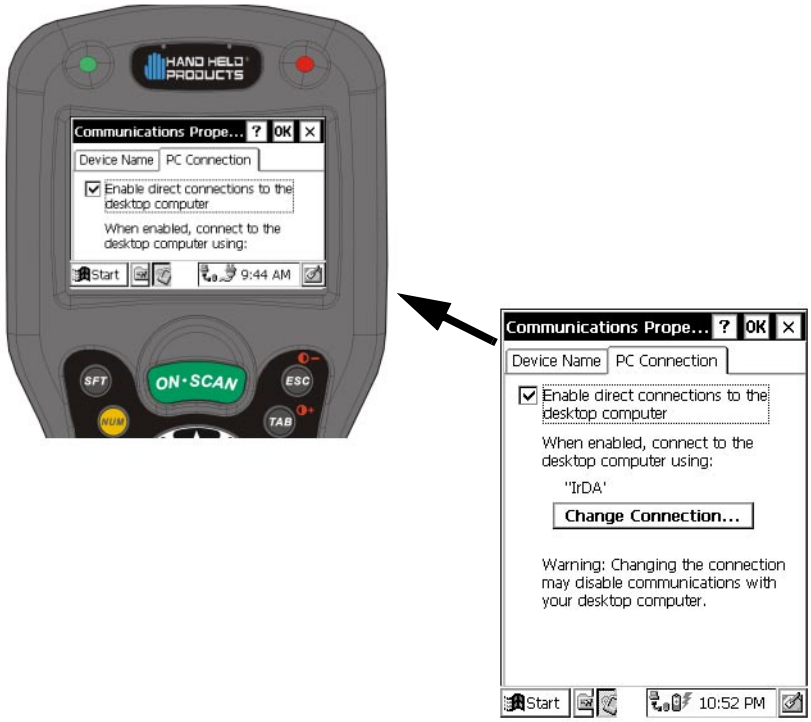

Full View of Screen

Communication Properties

3. Select Change Connection and choose the desired option for connecting to the desktop computer. Choose **IrDA** for Mobile IntelliBase IrDA connection and click **OK**.
4. Place the Dolphin 7300 in the Mobile IntelliBase.
5. On the Dolphin 7300 desktop, double-click on ActiveSync.

Change Connection Screen

8 Developing Applications

Applications for the Dolphin hand held computer are developed in the Microsoft® Windows® CE environment.

Microsoft Windows CE is a compact, highly efficient, scalable operating system designed for embedded systems and products. Its modular platform allows developers flexibility to customize it for a variety of small footprint and mobile 32-bit devices. Windows CE supports various hardware peripherals, devices and networking systems. These include keyboards, touchscreens, serial ports, Ethernet connections, and storage devices, such as PC cards.

The Dolphin platform contains most components of the basic Windows® CE kernel except for Pocket Word, Pocket Excel and Pocket Outlook. The kernel is the central module of the operating system. It is the part of the operating system that loads first, and it remains in main memory. Because it stays in memory, it is important for the kernel to be as small as possible while still providing all the essential services required by other parts of the operating system and applications. Data synchronization also is not supported as the Dolphin terminal is not designed for use as a single target.

For more information about Windows CE, check out these websites:

Microsoft Pocket PC (www.pocketpc.com) - General information

Chris De Herrera's Windows CE website (www.cewindows.net) - General information and FAQs

MSDN (msdn.microsoft.com/embedded) - Technical articles, developer documentation and downloads

VBCE.com (www.vbce.com) - eMbedded Visual Basic information and FAQs

Limited Warranty

Hand Held Products, Inc., d/b/a HHP ("HHP") warrants its products to be free from defects in materials and workmanship and to conform to HHP's published specifications applicable to the products purchased at the time of shipment. This warranty does not cover any HHP product which is (i) improperly installed or used; (ii) damaged by accident or negligence, including failure to follow the proper maintenance, service, and cleaning schedule; or (iii) damaged as a result of (A) modification or alteration by the purchaser or other party, (B) excessive voltage or current supplied to or drawn from the interface connections, (C) static electricity or electro-static discharge, (D) operation under conditions beyond the specified operating parameters, or (E) repair or service of the product by anyone other than HHP or its authorized representatives.

This warranty shall extend from the time of shipment for the duration published by HHP for the product at the time of purchase ("Warranty Period"). Any defective product must be returned (at purchaser's expense) during the Warranty Period to HHP's factory or authorized service center for inspection. No product will be accepted by HHP without a Return Materials Authorization, which may be obtained by contacting HHP. In the event that the product is returned to HHP or its authorized service center within the Warranty Period and HHP determines to its satisfaction that the product is defective due to defects in materials or workmanship, HHP, at its sole option, will either repair or replace the product without charge, except for return shipping to HHP.

EXCEPT AS MAY BE OTHERWISE PROVIDED BY APPLICABLE LAW, THE FOREGOING WARRANTY IS IN LIEU OF ALL OTHER COVENANTS OR WARRANTIES, EITHER EXPRESSED OR IMPLIED, ORAL OR WRITTEN, INCLUDING, WITHOUT LIMITATION, ANY IMPLIED WARRANTIES OF MERCHANTABILITY OR FITNESS FOR A PARTICULAR PURPOSE.

HHP'S RESPONSIBILITY AND PURCHASER'S EXCLUSIVE REMEDY UNDER THIS WARRANTY IS LIMITED TO THE REPAIR OR REPLACEMENT OF THE DEFECTIVE PRODUCT. IN NO EVENT SHALL HHP BE LIABLE FOR INDIRECT, INCIDENTAL, OR CONSEQUENTIAL DAMAGES, AND, IN NO EVENT, SHALL ANY LIABILITY OF HHP ARISING IN CONNECTION WITH ANY PRODUCT SOLD HEREUNDER (WHETHER SUCH LIABILITY ARISES FROM A CLAIM BASED ON CONTRACT, WARRANTY, TORT, OR OTHERWISE) EXCEED THE ACTUAL AMOUNT PAID TO HHP FOR THE PRODUCT. THESE LIMITATIONS ON LIABILITY SHALL REMAIN IN FULL FORCE AND EFFECT EVEN WHEN HHP MAY HAVE BEEN ADVISED OF THE POSSIBILITY OF

SUCH INJURIES, LOSSES, OR DAMAGES. SOME STATES, PROVINCES, OR COUNTRIES DO NOT ALLOW THE EXCLUSION OR LIMITATIONS OF INCIDENTAL OR CONSEQUENTIAL DAMAGES, SO THE ABOVE LIMITATION OR EXCLUSION MAY NOT APPLY TO YOU.

All provisions of this Limited Warranty are separate and severable, which means that if any provision is held invalid and unenforceable, such determination shall not affect the validity of enforceability of the other provisions hereof.

The limited duration of the warranty for the Dolphin 7300 terminal is as described below:

Terminals with an integrated imager are covered by a two-year limited warranty. If equipped with a touch screen display, the display is covered by a one-year limited warranty.

The limited duration of the warranty for the Dolphin HomeBase, IntelliBase, IntelliBase+, USB HomeBase, Mobile IntelliBase and QuadCharger is for one year.

The limited duration of the warranty for batteries is one year. The battery life will be greatly increased when following the specific battery instructions in the user guide. Rechargeable batteries are highly susceptible to “battery memory” and if instructions are not followed, the amount of hours of usage and the life of the battery are greatly reduced.

Batteries returned to HHP in this reduced state may or may not be replaced under this warranty.

Use only power adapters approved for use by HHP. Failure to do so may result in improper operation or damage to the unit and will void the warranty.

HHP, Inc. extends these warranties only to the first end-users of the products. These warranties are non-transferable.

How Problems Should Be Handled

Should the Dolphin terminal or any of the peripherals prove to be defective within the stated warranty period from the of date of purchase, return the product, as described in the RMA procedures below, and we will, at our option, repair or replace the product, to whatever extent HHP deems necessary to restore the product to proper operating condition, without any charge to you.

Return Information

If you purchased the product from an Authorized HHP Reseller, contact the Reseller with the unit's serial number. Your Reseller will contact Hand Held, on your behalf, to arrange for the unit to be serviced.

If you purchased the product directly from Hand Held, or have been instructed by your Reseller to contact HHP directly, call the Customer Services Department in your area to request a Repair Maintenance Authorization (RMA) number.

North America:

(TEL) (800)-782-4263

(FAX) (704)-566-9904

Latin America

(TEL) (239)-263-7600

(FAX) (239)-263-9689

Europe, Middle East and Africa:

(TEL) Int+31 (0) 40 29 01 600

(FAX) Int+31 (0) 40 24 25 672

The United Kingdom:

(TEL) Int+44 (0) 1 925 240055 or Int+353 1 216 0070

(FAX) Int+44 (0) 1 925 631280 or Int+353 1 925 6353

Asia/Pacific:

(TEL) Int+852-2511-3050 or 2511-3132

(FAX) Int+852-2511-1355

Japan:

(TEL) Int+81-3-5212-7392

(FAX) Int+81-3-3261-7372

You must have an RMA number to receive service from any of HHP's repair facilities. Failure to obtain an RMA number before shipping your product to this repair facility can delay the processing of your repair request.

When calling for service at any of our repair facilities, please be prepared to give the following information:

- Product's type and serial number
- Brief description of problem
- Dated Proof-of-Purchase

Place the product in its original packaging with a copy of your original invoice and ship the product prepaid to the appropriate address below. **Write the RMA number on the mailing label under the address.**

North and South America:

HHP

Products Services Department

7510 East Independence Blvd., #100

Charlotte, NC 28227-9411

Japan Office

Bon Marusan 8F

3-5-1 Kanda-Jinbocho

Chiyoda-ku

Tokyo 101, Japan

Europe, Middle East and Africa :

Nijverheidsweg 9

5627 BT Eindhoven

The Netherlands

Latin America Office

5117 Castello Drive

Suite 1

Naples, FL 34103

The United Kingdom :

Dallam Court

Dallam Lane Warrington

Cheshire WA2 7LT

United Kingdom

Asia/Pacific

10/F Tung Sun Commercial Centre

194-200 Lockhart Road

Wanchai, Hong Kong

If your equipment is still covered under the initial end-user's product warranty, please notify the Product Services Representative when you call. Please include a copy of the original invoice in the package to avoid possible service delays. For your protection, we recommend you insure any equipment being sent to HHP.

After repair or replacement of the equipment, HHP will ship the product, at our cost, to your location. Non-warranty repairs will be returned, at the customer's

expense, unless otherwise requested. Units currently under a service agreement will be shipped per the service agreement.

Please make note of the RMA number (if required) before shipping and the product's serial number for future reference.

How To Extend Your Warranty

HHP offers a variety of service plans on our hardware products. These agreements offer continued coverage for your equipment after the initial warranty expires. For more information, contact your HHP sales representative, customer account representative or the Product Service Marketing Manager or your Authorized Reseller.

Application Support

If you have a question or problem with your Dolphin terminal or Dolphin peripheral, you can get technical assistance from HHP's Application Support department.

North America:

(TEL) 1-(800) 782-4263

8 a.m. and 9 p.m., Eastern Time, Monday through Friday

support@hhp.com

Europe, Middle East and Africa:

(TEL) Int+31-40 242 4486

9 a.m. - 5 p.m., Central European Time, Monday through Friday

euro_support@hhp.com

The United Kingdom:

(TEL)+44 1925 240055

9 a.m. - 5:30 p.m., UK Time, Monday through Friday

euro_support@hhp.com

Asia:

(TEL)Int+852-2511-3050 or 2511-3132

asia_support@hhp.com

Latin America:

(TEL) (239) 263-7600

la_support@hhp.com

Use the keyboard shortcuts in the chart below to navigate the Dolphin 7300 terminal's keyboard.

Windows Keyboard Shortcuts

Press	To
CTRL + C	Copy.
CTRL + X	Cut.
CTRL + V	Paste.
CTRL + Z	Undo.
DELETE	Delete.
CTRL + RIGHT ARROW	Move the insertion point to the beginning of the next word.
CTRL + LEFT ARROW	Move the insertion point to the beginning of the previous word.
CTRL + DOWN ARROW	Move the insertion point to the beginning of the next paragraph.
CTRL + UP ARROW	Move the insertion point to the beginning of the previous paragraph.
SHIFT with any of the arrow keys	Select more than one item in a window or on the desktop, or select text within a document.
CTRL+A	Select all.
ALT+ENTER	View properties for the selected item.
ALT+TAB	Switch between open items.
ALT+ESC	Cycle through items in the order they were opened.
CTRL+ESC	Display the **Start** menu.
ALT+Underlined letter in a menu name	Display the corresponding menu.
Underlined letter in a command name on an open menu	Carry out the corresponding command.
BACKSPACE	View the folder one level up in My Computer or Windows Explorer.
ESC	Cancel the current task.

Using the Modifier Keys

The Dolphin 7300 terminal keyboard features the standard PC keyboard modifier keys, **Alt**, **Ctrl** and **Shift**. The **Shift** key only modifies the next key pressed; it must be pressed before each key you wish to make **lower** case. For single-handed operation, the **Shift** key only modifies the next key pressed; it must be pressed before each key you wish to modify. Functions of the Alt and Ctrl keys are dependent on the software application in use.

There are two additional modifier keys located on the bottom row of the keyboard. Use these keys in combination with other keys to type the corresponding color-coded characters and functions. The Red and Blue keys only modify the next key pressed; these keys must be pressed and released before each key you wish to modify to the Blue or Red case. See the charts below for key combinations that access the functions and special characters using these keys.

43-Key Alpha/Numeric Keyboard

Blue Key Functions & Characters For 43-Key Alpha/Numeric Keyboard

Key Combination	Function/Special Character
Double tap Blue key	Activate/Deactivate Mouse Utility
Blue key + D	- (minus)
Blue key + H	_ (underscore)
Blue key + L	=
Blue key + P	+
Blue key + Q	;
Blue key + R	:
Blue key + S	*
Blue key + T	/
Blue key + U	@
Blue key + X	\

Red Key Functions & Characters For 43-Key Alpha Shifted Numeric Keyboard

Key Combination	Function/Special Character
Red key + ESC	Lightens Contrast*
Red key + TAB	Darkens Contrast*
Red key + SFT	Toggles on Caps Lock
Red key + Q	F1
Red key + R	F2
Red key + S	F3
Red key + T	F4
Red key + U	F5
Red key + V	F6
Red key + W	F7
Red key + X	F8
Red key + Y	START
Red key + Z	INS (insert)
Red key + SP	BKSP (backspace)
Red key + BACKLIGHT KEY	DEL (delete)

**Note: Exit the mouse utility before adjusting the contrast.*

Key Combinations

Use the key combinations listed below to access certain keyboard functions or to use special characters that are not defined on the 43-key version of the Dolphin keyboard.

Key Combinations Using NUM & SFT Keys

Key/Key Combination	Function/Special Character
NUM + SFT + A	!
NUM + SFT + B	@
NUM + SFT + C	#
NUM + SFT + E	$
NUM + SFT + F	%
NUM + SFT + G	^

Key Combinations Using NUM & SFT Keys

Key/Key Combination	Function/Special Character
NUM + SFT + I	&
NUM + SFT + J	*
NUM + SFT + K	(
NUM + SFT + M	>
NUM + SFT + N	)
NUM + SFT + O	<

Key Combinations Using Blue & SFT Keys

Key/Key Combinations	Function/Special Characters
Blue + SFT + T	?
Blue + SFT + X	|

35 Key Numeric/Alpha

Blue Key Functions & Characters For 35-Key Numeric/Alpha Keyboard

Key Combination	Function/Special Character
Double tap Blue key	Activate/Deactivate Mouse Utility
Blue key + .	+
Blue key + ,	-
Blue key + F1	;
Blue key + F2	:
Blue key + F3	/
Blue key + F4	\
Blue key + SP	_
Blue key + DEL	@
Blue key + 0 (zero)	=

Key Combinations

Use the key combinations listed below to access certain keyboard functions or to use special characters that are not defined on the 35-key version of the Dolphin 7300 keyboard.

Key Combinations Using ALPHA & SFT Keys

Key/Key Combination	Function/Special Character
ALPHA + SFT + 1	!
ALPHA + SFT + 2	@
ALPHA + SFT + 3	#
ALPHA + SFT + 4	$
ALPHA + SFT + 5	%
ALPHA + SFT + 6	^
ALPHA + SFT + 7	&
ALPHA + SFT + 8	*
ALPHA + SFT + 9	(
ALPHA + SFT + 0	)
ALPHA + SFT + . (period)	>
ALPHA + SFT + , (comma)	<

Blue Key Functions & Characters For 56-Key Full Alpha Numeric Keyboard

Key Combination	Function/Special Character
Double tap Blue key	Activate/Deactivate Mouse Utility
Blue key + .	+
Blue key + ,	-
Blue key + A	;
Blue key + B	:
Blue key + C	/
Blue key + D	\
Blue key + E	_
Blue key + F	@

Red Key Functions & Characters for 56-Key Full Alpha Numeric Keyboard

Key Combination	Function/Special Character
Red key + ESC	Lightens Contrast*
Red key + TAB	Darkens Contrast*
Red key + SFT	Toggles on Caps Lock
Red key + A	F1
Red key + B	F2
Red key + C	F3
Red key + D	F4
Red key + E	F5
Red key + F	F6
Red key + G	F7
Red key + H	F8
Red key + I	F9
Red key + J	F10
Red key + K	F11
Red key + L	F12

Red Key Functions & Characters for 56-Key Full Alpha Numeric Keyboard

Key Combination	Function/Special Character
Red key + M	F13
Red key + N	F14
Red key + O	F15
Red key + P	F16
Red key + Q	F17
Red key + R	F18
Red key + S	F19
Red key + T	F20
Red key + U	F21
Red key + V	F22
Red key + W	F23
Red key + X	F24
Red key + Y	Z

Note: Exit the mouse utility before adjusting the contrast.

Key Combinations

Use the key combinations listed below to access certain keyboard functions or to use special characters that are not defined on the 56-key version of the Dolphin 7300 keyboard.

Key Combinations Using SFT & Number Keys

Key/Key Combination	Function/Special Character
SFT + 1	!
SFT + 2	@
SFT + 3	#
SFT + 4	$
SFT + 5	%
SFT + 6	^
SFT + 7	&
SFT + 8	*
SFT + 9	(

Key Combinations Using SFT & Number Keys

Key/Key Combination	Function/Special Character
SFT + 0	)
SFT + . (period)	>
SFT + , (comma)	<

Dolphin 7300 Scan Maps

Dolphin 7300 HD Scan Map Linear

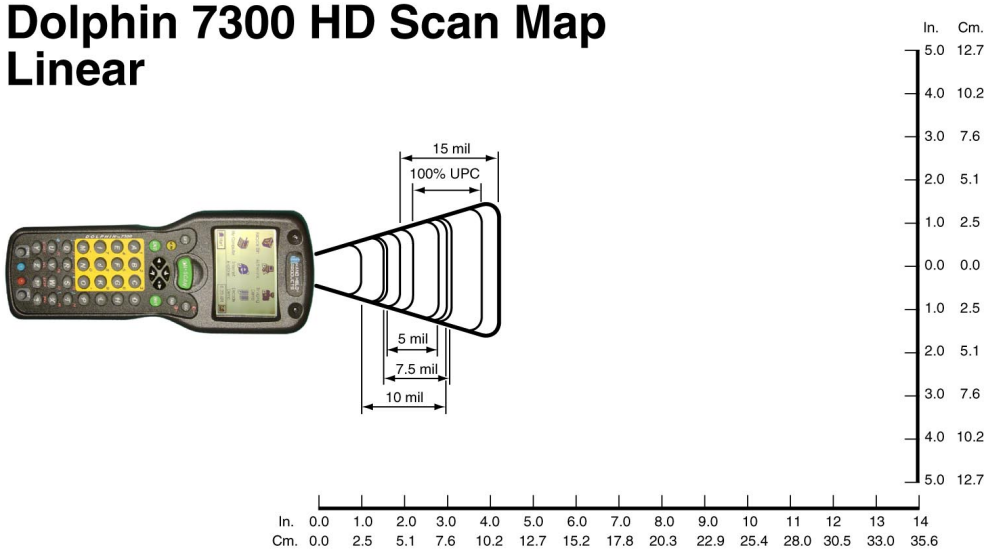

Dolphin 7300 HD Scan Map PDF417/Matrix

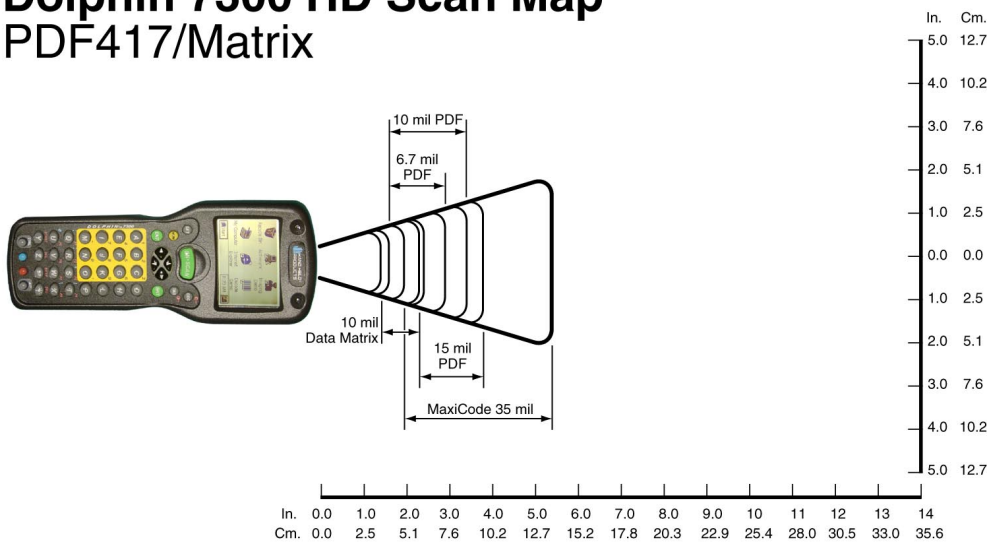

Dolphin 7300 LX Scan Map
Linear

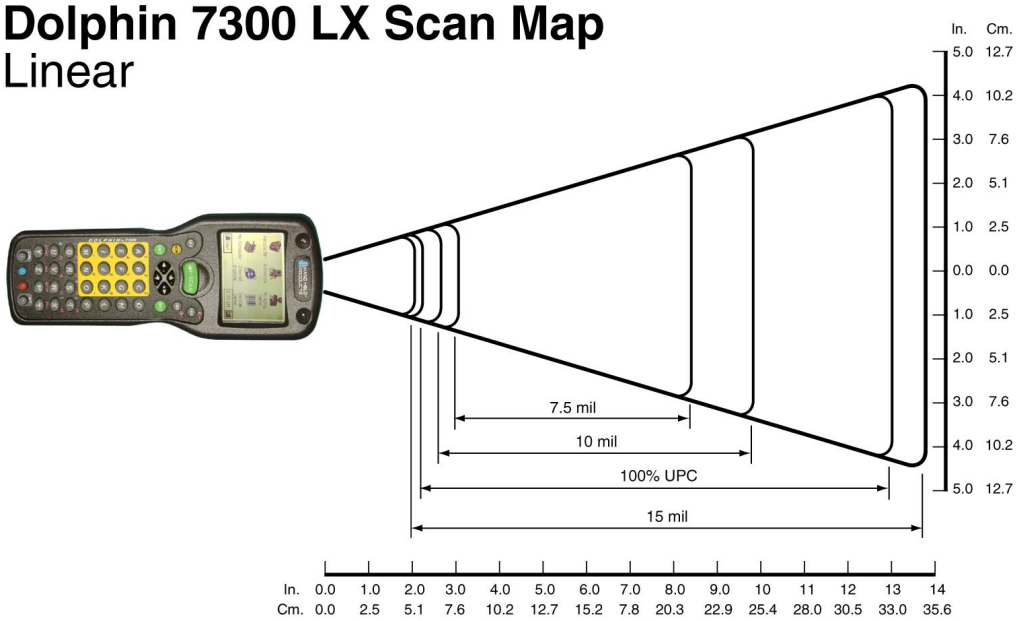

Dolphin 7300 LX Scan Map
PDF417/Matrix

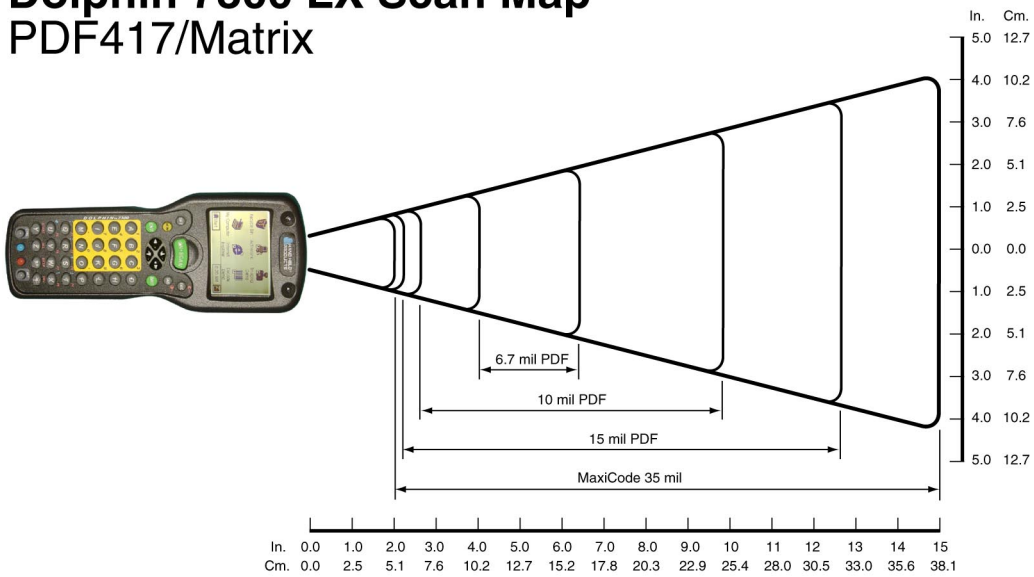

4619 Jordan Road
P.O. Box 188
Skaneateles Falls, NY 13153-0187

7300/UG Rev B