FCC SAR Test Report

Report No.	:	**SA190111C05**
Applicant	:	**Honeywell International Inc.**
Address	:	**9680 Old Bailes Road, Fort Mill, SC 29707 USA**
Product	:	**Mobile computer**
FCC ID	:	**HD5-CK65L0N**
Brand	:	**Honeywell**
Model No.	:	**CK65L0N**
Standards	:	**FCC 47 CFR Part 2 (2.1093), IEEE C95.1:1992, IEEE Std 1528:2013** **KDB 865664 D01 v01r04, KDB 865664 D02 v01r02** **KDB 248227 D01 v02r02, KDB 447498 D01 v06, KDB 648474 D04 v01r03**
Sample Received Date	:	**Jan. 11, 2019**
Date of Testing	:	**Feb. 23, 2019 ~ Mar. 04, 2019**
Lab Address	:	**No. 47-2, 14th Ling, Chia Pau Vil., Lin Kou Dist., New Taipei City, Taiwan, R.O.C.**
Test Location	:	**No. 19, Hwa Ya 2nd Rd, Wen Hwa Vil, Kwei Shan Dist., Taoyuan City 33383, Taiwan (R.O.C)**

CERTIFICATION: The above equipment have been tested by **Bureau Veritas Consumer Products Services (H.K.) Ltd., Taoyuan Branch – Lin Kou Laboratories**, and found compliance with the requirement of the above standards. The test record, data evaluation & Equipment Under Test (EUT) configurations represented herein are true and accurate accounts of the measurements of the sample's SAR characteristics under the conditions specified in this report. It should not be reproduced except in full, without the written approval of our laboratory. The client should not use it to claim product certification, approval, or endorsement by TAF or any government agencies.

Prepared By : Ivonne Wu / Supervisor

Approved By : Gordon Lin / Assistant Manager

FCC Accredited No.: TW0003

This report is for your exclusive use. Any copying or replication of this report to or for any other person or entity, or use of our name or trademark, is permitted only with our prior written permission. This report sets forth our findings solely with respect to the test samples identified herein. The results set forth in this report are not indicative or representative of the quality or characteristics of the lot from which a test sample was taken or any similar or identical product unless specifically and expressly noted. Our report includes all of the tests requested by you and the results thereof based upon the information that you provided to us. You have 60 days from date of issuance of this report to notify us of any material error or omission caused by our negligence, provided, however, that such notice shall be in writing and shall specifically address the issue you wish to raise. A failure to raise such issue within the prescribed time shall constitute your unqualified acceptance of the completeness of this report, the tests conducted and the correctness of the report contents. Unless specific mention, the uncertainty of measurement has been explicitly taken into account to declare the compliance or non-compliance to the specification.

Table of Contents

Release Control Record **3**
1. Summary of Maximum SAR Value **4**
2. Description of Equipment Under Test **5**
3. SAR Measurement System **6**
3.1 Definition of Specific Absorption Rate (SAR) 6
3.2 SPEAG DASY52 System 6
3.2.1 Robot 7
3.2.2 Probes 8
3.2.3 Data Acquisition Electronics (DAE) 8
3.2.4 Phantoms 9
3.2.5 Device Holder 10
3.2.6 System Validation Dipoles 10
3.2.7 Tissue Simulating Liquids 11
3.3 SAR System Verification 14
3.4 SAR Measurement Procedure 15
3.4.1 Area & Zoom Scan Procedure 15
3.4.2 Volume Scan Procedure 15
3.4.3 Power Drift Monitoring 16
3.4.4 Spatial Peak SAR Evaluation 16
3.4.5 SAR Averaged Methods 16
4. SAR Measurement Evaluation **17**
4.1 EUT Configuration and Setting 17
4.2 EUT Testing Position 19
4.2.1 Body-worn Accessory Exposure Conditions 20
4.3 Tissue Verification 21
4.4 System Validation 21
4.5 System Verification 22
4.6 Maximum Output Power 23
4.6.1 Maximum Target Conducted Power 23
4.6.2 Measured Conducted Power Result 24
4.7 SAR Testing Results 25
4.7.1 SAR Test Reduction Considerations 25
4.7.2 SAR Results for Body Exposure Condition 26
4.7.3 SAR Measurement Variability 30
4.7.4 Simultaneous Multi-band Transmission Evaluation 30
5. Calibration of Test Equipment **31**
6. Measurement Uncertainty **32**
7. Information of the Testing Laboratories **33**

Appendix A. SAR Plots of System Verification
Appendix B. SAR Plots of SAR Measurement
Appendix C. Calibration Certificate for Probe and Dipole
Appendix D. Photographs of EUT and Setup

Release Control Record

Report No.	Reason for Change	Date Issued
SA190111C05	Initial release	Mar. 11, 2019

1. Summary of Maximum SAR Value

Equipment Class	Mode	Highest SAR-1g Body (W/kg)
DTS	2.4G WLAN	0.55
NII	5.2G WLAN	0.21
	5.6G WLAN	0.81
	5.8G WLAN	1.06
DSS	Bluetooth	0.01
DXX	NFC	N/A

Note:

1. The SAR criteria **(Head & Body: SAR-1g 1.6 W/kg, and Extremity: SAR-10g 4.0 W/kg)** for general population / uncontrolled exposure is specified in FCC 47 CFR part 2 (2.1093) and ANSI/IEEE C95.1-1992.

2. Description of Equipment Under Test

EUT Type	Mobile computer
FCC ID	HD5-CK65L0N
Brand Name	Honeywell
Model Name	CK65L0N
EUT Configurations	A1: Alpha/Num Keypad + Scanner (N6703) A2: Alpha/Num Keypad + Scanner (EX20) B1: Num Keypad + Scanner (N6703) B2: Num Keypad + Scanner (EX20)
Tx Frequency Bands (Unit: MHz)	WLAN : 2412 ~ 2462, 5180 ~ 5240, 5260 ~ 5320, 5500 ~ 5700, 5745 ~ 5825 Bluetooth : 2402 ~ 2480 NFC : 13.56
Uplink Modulations	802.11b : DSSS 802.11a/g/n/ac : OFDM Bluetooth : GFSK, π/4-DQPSK, 8-DPSK NFC : ASK
Maximum Tune-up Conducted Power (Unit: dBm)	Please refer to section 4.6.1 of this report
Antenna Type	FPC Antenna
EUT Stage	Engineering Sample

Note:

1. The above EUT information is declared by manufacturer and for more detailed features description please refers to the manufacturer's specifications or User's Manual.

List of Accessory:

Battery 1	**Brand Name**	Intermec Technologies Corporation
	Model Name	AB18
	Power Rating	3.7Vdc, 5.1Ah, 18.9Wh
	Type	Li-ion

Accessory for test only (Not sale together)

Battery 2	**Brand Name**	Intermec Technologies Corporation
	Model Name	1001AB01
	Power Rating	3.7Vdc, 5.2Ah, 19.2Wh
	Type	Li-ion
Battery 3	**Brand Name**	Intermec Technologies Corporation
	Model Name	AB17
	Power Rating	3.7Vdc, 2Ah, 7.4Wh
	Type	Li-ion
Holster 1 (w/ scan handle)	**Brand Name**	Intermec
	Part No.	815-088-001
Holster 2 (w/o scan handle)	**Brand Name**	Intermec
	Part No.	815-087-001
Scan Handle	**Brand Name**	Intermec
	Part No.	203-879-003

3. SAR Measurement System

3.1 Definition of Specific Absorption Rate (SAR)

SAR is related to the rate at which energy is absorbed per unit mass in an object exposed to a radio field. The SAR distribution in a biological body is complicated and is usually carried out by experimental techniques or numerical modeling. The standard recommends limits for two tiers of groups, occupational/controlled and general population/uncontrolled, based on a person's awareness and ability to exercise control over his or her exposure. In general, occupational/controlled exposure limits are higher than the limits for general population/uncontrolled.

The SAR definition is the time derivative (rate) of the incremental energy (dW) absorbed by (dissipated in) an incremental mass (dm) contained in a volume element (dv) of a given density (ρ). The equation description is as below:

$$\mathbf{SAR} = \frac{\mathbf{d}}{\mathbf{dt}}\left(\frac{\mathbf{dW}}{\mathbf{dm}}\right) = \frac{\mathbf{d}}{\mathbf{dt}}\left(\frac{\mathbf{dW}}{\boldsymbol{\rho}\mathbf{dv}}\right)$$

SAR is expressed in units of Watts per kilogram (W/kg)

SAR measurement can be related to the electrical field in the tissue by

$$\mathbf{SAR} = \frac{\boldsymbol{\sigma}|\mathbf{E}|^2}{\boldsymbol{\rho}}$$

Where: σ is the conductivity of the tissue, ρ is the mass density of the tissue and E is the RMS electrical field strength.

3.2 SPEAG DASY52 System

DASY52 system consists of high precision robot, probe alignment sensor, phantom, robot controller, controlled measurement server and near-field probe. The robot includes six axes that can move to the precision position of the DASY52 software defined. The DASY52 software can define the area that is detected by the probe. The robot is connected to controlled box. Controlled measurement server is connected to the controlled robot box. The DAE includes amplifier, signal multiplexing, AD converter, offset measurement and surface detection. It is connected to the Electro-optical coupler (ECO). The ECO performs the conversion form the optical into digital electric signal of the DAE and transfers data to the PC.

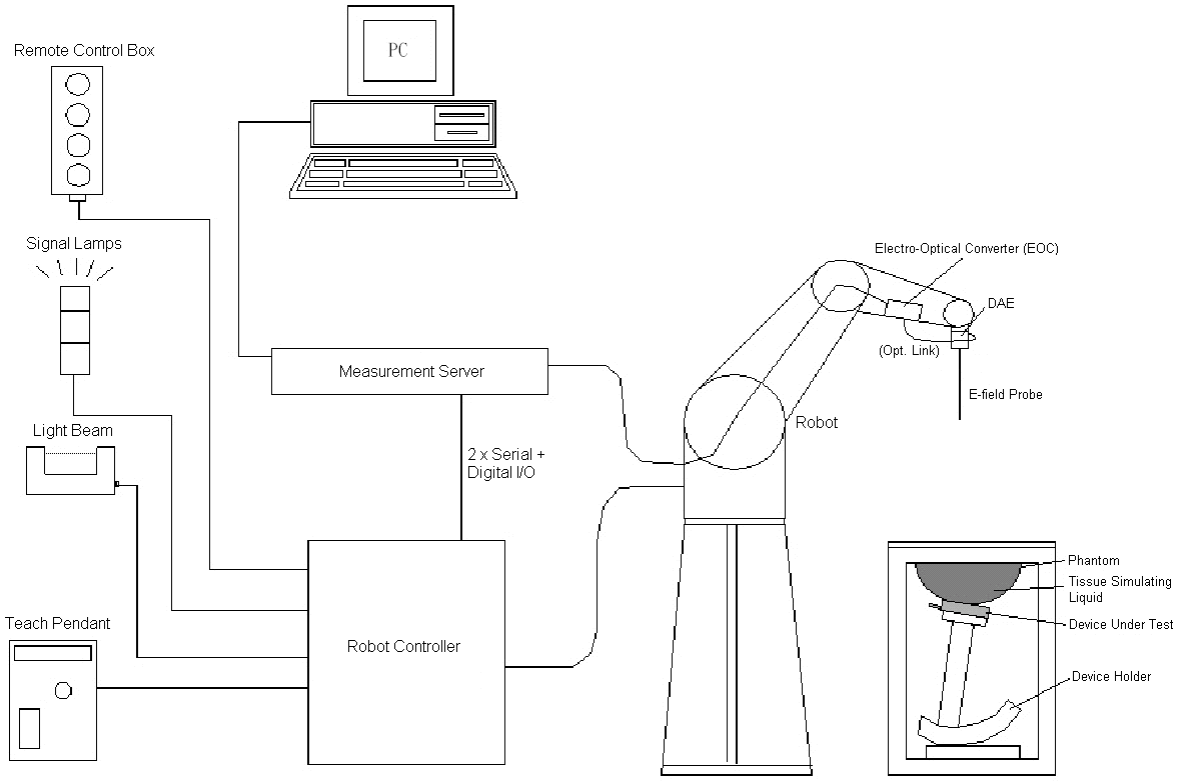

Fig-3.1 SPEAG DASY52 System Setup

3.2.1 Robot

The DASY52 systems use the high precision robots from Stäubli SA (France). For the 6-axis controller system, the robot controller version of CS8c from Stäubli is used. The Stäubli robot series have many features that are important for our application:

- High precision (repeatability ±0.035 mm)
- High reliability (industrial design)
- Jerk-free straight movements
- Low ELF interference (the closed metallic construction shields against motor control fields)

Fig-3.2 SPEAG DASY52 System

3.2.2 Probes

The SAR measurement is conducted with the dosimetric probe. The probe is specially designed and calibrated for use in liquid with high permittivity. The dosimetric probe has special calibration in liquid at different frequency.

Model	EX3DV4	
Construction	Symmetrical design with triangular core. Built-in shielding against static charges. PEEK enclosure material (resistant to organic solvents, e.g., DGBE).	
Frequency	10 MHz to 6 GHz Linearity: ± 0.2 dB	
Directivity	± 0.3 dB in HSL (rotation around probe axis) ± 0.5 dB in tissue material (rotation normal to probe axis)	
Dynamic Range	10 µW/g to 100 mW/g Linearity: ± 0.2 dB (noise: typically < 1 µW/g)	
Dimensions	Overall length: 337 mm (Tip: 20 mm) Tip diameter: 2.5 mm (Body: 12 mm) Typical distance from probe tip to dipole centers: 1 mm	

Model	ES3DV3	
Construction	Symmetrical design with triangular core. Interleaved sensors. Built-in shielding against static charges. PEEK enclosure material (resistant to organic solvents, e.g., DGBE).	
Frequency	10 MHz to 4 GHz Linearity: ± 0.2 dB	
Directivity	± 0.2 dB in HSL (rotation around probe axis) ± 0.3 dB in tissue material (rotation normal to probe axis)	
Dynamic Range	5 µW/g to 100 mW/g Linearity: ± 0.2 dB	
Dimensions	Overall length: 337 mm (Tip: 20 mm) Tip diameter: 3.9 mm (Body: 12 mm) Distance from probe tip to dipole centers: 2.0 mm	

Model	ET3DV6	
Construction	Symmetrical design with triangular core Built-in optical fiber for surface detection system. Built-in shielding against static charges. PEEK enclosure material (resistant to organic solvents, e.g., DGBE)	
Frequency	10 MHz to 2.3 GHz; Linearity: ± 0.2 dB	
Directivity	± 0.2 dB in TSL (rotation around probe axis) ± 0.4 dB in TSL (rotation normal to probe axis)	
Dynamic Range	5 µW/g to 100 mW/g; Linearity: ± 0.2 dB	
Dimensions	Overall length: 337 mm (Tip: 16 mm) Tip diameter: 6.8 mm (Body: 12 mm) Distance from probe tip to dipole centers: 2.7 mm	

3.2.3 Data Acquisition Electronics (DAE)

Model	DAE3, DAE4	
Construction	Signal amplifier, multiplexer, A/D converter and control logic. Serial optical link for communication with DASY embedded system (fully remote controlled). Two step probe touch detector for mechanical surface detection and emergency robot stop.	
Measurement Range	-100 to +300 mV (16 bit resolution and two range settings: 4mV, 400mV)	
Input Offset Voltage	< 5µV (with auto zero)	
Input Bias Current	< 50 fA	
Dimensions	60 x 60 x 68 mm	

3.2.4 Phantoms

Model	Twin SAM	
Construction	The shell corresponds to the specifications of the Specific Anthropomorphic Mannequin (SAM) phantom defined in IEEE 1528 and IEC 62209-1. It enables the dosimetric evaluation of left and right hand phone usage as well as body mounted usage at the flat phantom region. A cover prevents evaporation of the liquid. Reference markings on the phantom allow the complete setup of all predefined phantom positions and measurement grids by teaching three points with the robot.	
Material	Vinylester, glass fiber reinforced (VE-GF)	
Shell Thickness	2 ± 0.2 mm (6 ± 0.2 mm at ear point)	
Dimensions	Length: 1000 mm Width: 500 mm Height: adjustable feet	
Filling Volume	approx. 25 liters	

Model	ELI	
Construction	Phantom for compliance testing of handheld and body-mounted wireless devices in the frequency range of 30 MHz to 6 GHz. ELI is fully compatible with the IEC 62209-2 standard and all known tissue simulating liquids. ELI has been optimized regarding its performance and can be integrated into our standard phantom tables. A cover prevents evaporation of the liquid. Reference markings on the phantom allow installation of the complete setup, including all predefined phantom positions and measurement grids, by teaching three points. The phantom is compatible with all SPEAG dosimetric probes and dipoles.	
Material	Vinylester, glass fiber reinforced (VE-GF)	
Shell Thickness	2.0 ± 0.2 mm (bottom plate)	
Dimensions	Major axis: 600 mm Minor axis: 400 mm	
Filling Volume	approx. 30 liters	

3.2.5 Device Holder

Model	Mounting Device	
Construction	In combination with the Twin SAM Phantom or ELI4, the Mounting Device enables the rotation of the mounted transmitter device in spherical coordinates. Rotation point is the ear opening point. Transmitter devices can be easily and accurately positioned according to IEC, IEEE, FCC or other specifications. The device holder can be locked for positioning at different phantom sections (left head, right head, flat).	
Material	POM	

Model	Laptop Extensions Kit	
Construction	Simple but effective and easy-to-use extension for Mounting Device that facilitates the testing of larger devices according to IEC 62209-2 (e.g., laptops, cameras, etc.). It is lightweight and fits easily on the upper part of the Mounting Device in place of the phone positioner.	
Material	POM, Acrylic glass, Foam	

3.2.6 System Validation Dipoles

Model	D-Serial	
Construction	Symmetrical dipole with l/4 balun. Enables measurement of feed point impedance with NWA. Matched for use near flat phantoms filled with tissue simulating solutions.	
Frequency	750 MHz to 5800 MHz	
Return Loss	> 20 dB	
Power Capability	> 100 W (f < 1GHz), > 40 W (f > 1GHz)	

3.2.7 Tissue Simulating Liquids

For SAR measurement of the field distribution inside the phantom, the phantom must be filled with homogeneous tissue simulating liquid to a depth of at least 15 cm. For head SAR testing, the liquid height from the ear reference point (ERP) of the phantom to the liquid top surface is larger than 15 cm. For body SAR testing, the liquid height from the center of the flat phantom to the liquid top surface is larger than 15 cm. The nominal dielectric values of the tissue simulating liquids in the phantom and the tolerance of 5% are listed in Table-3.1.

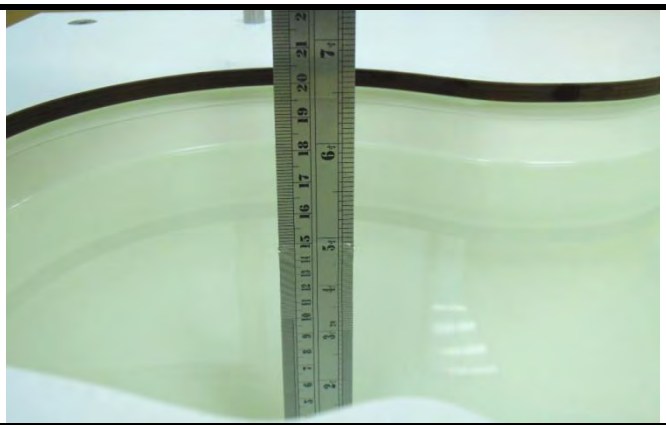	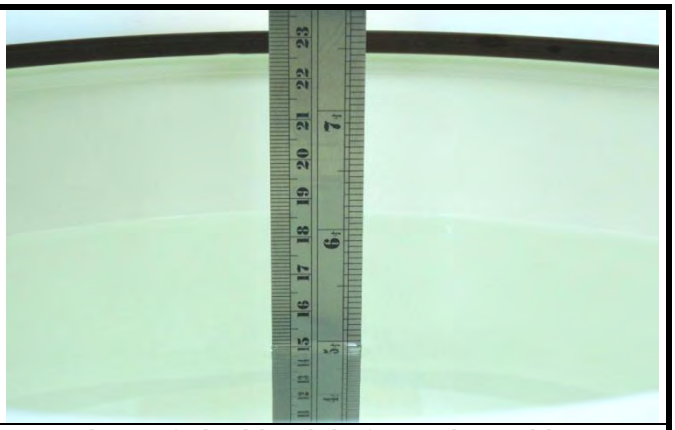
Photo of Liquid Height for Head Position	**Photo of Liquid Height for Body Position**

The dielectric properties of the head tissue simulating liquids are defined in IEEE 1528, and KDB 865664 D01 Appendix A. For the body tissue simulating liquids, the dielectric properties are defined in KDB 865664 D01 Appendix A. The dielectric properties of the tissue simulating liquids were verified prior to the SAR evaluation using a dielectric assessment kit and a network analyzer.

Table-3.1 Targets of Tissue Simulating Liquid

Frequency (MHz)	Target Permittivity	Range of ±5%	Target Conductivity	Range of ±5%
For Head				
750	41.9	39.8 ~ 44.0	0.89	0.85 ~ 0.93
835	41.5	39.4 ~ 43.6	0.90	0.86 ~ 0.95
900	41.5	39.4 ~ 43.6	0.97	0.92 ~ 1.02
1450	40.5	38.5 ~ 42.5	1.20	1.14 ~ 1.26
1640	40.3	38.3 ~ 42.3	1.29	1.23 ~ 1.35
1750	40.1	38.1 ~ 42.1	1.37	1.30 ~ 1.44
1800	40.0	38.0 ~ 42.0	1.40	1.33 ~ 1.47
1900	40.0	38.0 ~ 42.0	1.40	1.33 ~ 1.47
2000	40.0	38.0 ~ 42.0	1.40	1.33 ~ 1.47
2300	39.5	37.5 ~ 41.5	1.67	1.59 ~ 1.75
2450	39.2	37.2 ~ 41.2	1.80	1.71 ~ 1.89
2600	39.0	37.1 ~ 41.0	1.96	1.86 ~ 2.06
3500	37.9	36.0 ~ 39.8	2.91	2.76 ~ 3.06
5200	36.0	34.2 ~ 37.8	4.66	4.43 ~ 4.89
5300	35.9	34.1 ~ 37.7	4.76	4.52 ~ 5.00
5500	35.6	33.8 ~ 37.4	4.96	4.71 ~ 5.21
5600	35.5	33.7 ~ 37.3	5.07	4.82 ~ 5.32
5800	35.3	33.5 ~ 37.1	5.27	5.01 ~ 5.53
For Body				
750	55.5	52.7 ~ 58.3	0.96	0.91 ~ 1.01
835	55.2	52.4 ~ 58.0	0.97	0.92 ~ 1.02
900	55.0	52.3 ~ 57.8	1.05	1.00 ~ 1.10
1450	54.0	51.3 ~ 56.7	1.30	1.24 ~ 1.37
1640	53.8	51.1 ~ 56.5	1.40	1.33 ~ 1.47
1750	53.4	50.7 ~ 56.1	1.49	1.42 ~ 1.56
1800	53.3	50.6 ~ 56.0	1.52	1.44 ~ 1.60
1900	53.3	50.6 ~ 56.0	1.52	1.44 ~ 1.60
2000	53.3	50.6 ~ 56.0	1.52	1.44 ~ 1.60
2300	52.9	50.3 ~ 55.5	1.81	1.72 ~ 1.90
2450	52.7	50.1 ~ 55.3	1.95	1.85 ~ 2.05
2600	52.5	49.9 ~ 55.1	2.16	2.05 ~ 2.27
3500	51.3	48.7 ~ 53.9	3.31	3.14 ~ 3.48
5200	49.0	46.6 ~ 51.5	5.30	5.04 ~ 5.57
5300	48.9	46.5 ~ 51.3	5.42	5.15 ~ 5.69
5500	48.6	46.2 ~ 51.0	5.65	5.37 ~ 5.93
5600	48.5	46.1 ~ 50.9	5.77	5.48 ~ 6.06
5800	48.2	45.8 ~ 50.6	6.00	5.70 ~ 6.30

The following table gives the recipes for tissue simulating liquids.

Table-3.2 Recipes of Tissue Simulating Liquid

Tissue Type	Bactericide	DGBE	HEC	NaCl	Sucrose	Triton X-100	Water	Diethylene Glycol Mono-hexylether
H750	0.2	-	0.2	1.5	56.0	-	42.1	-
H835	0.2	-	0.2	1.5	57.0	-	41.1	-
H900	0.2	-	0.2	1.4	58.0	-	40.2	-
H1450	-	43.3	-	0.6	-	-	56.1	-
H1640	-	45.8	-	0.5	-	-	53.7	-
H1750	-	47.0	-	0.4	-	-	52.6	-
H1800	-	44.5	-	0.3	-	-	55.2	-
H1900	-	44.5	-	0.2	-	-	55.3	-
H2000	-	44.5	-	0.1	-	-	55.4	-
H2300	-	44.9	-	0.1	-	-	55.0	-
H2450	-	45.0	-	0.1	-	-	54.9	-
H2600	-	45.1	-	0.1	-	-	54.8	-
H3500	-	8.0	-	0.2	-	20.0	71.8	-
H5G	-	-	-	-	-	17.2	65.5	17.3
B750	0.2	-	0.2	0.8	48.8	-	50.0	-
B835	0.2	-	0.2	0.9	48.5	-	50.2	-
B900	0.2	-	0.2	0.9	48.2	-	50.5	-
B1450	-	34.0	-	0.3	-	-	65.7	-
B1640	-	32.5	-	0.3	-	-	67.2	-
B1750	-	31.0	-	0.2	-	-	68.8	-
B1800	-	29.5	-	0.4	-	-	70.1	-
B1900	-	29.5	-	0.3	-	-	70.2	-
B2000	-	30.0	-	0.2	-	-	69.8	-
B2300	-	31.0	-	0.1	-	-	68.9	-
B2450	-	31.4	-	0.1	-	-	68.5	-
B2600	-	31.8	-	0.1	-	-	68.1	-
B3500	-	28.8	-	0.1	-	-	71.1	-
B5G	-	-	-	-	-	10.7	78.6	10.7

3.3 SAR System Verification

The system check verifies that the system operates within its specifications. It is performed daily or before every SAR measurement. The system check uses normal SAR measurements in the flat section of the phantom with a matched dipole at a specified distance. The system verification setup is shown as below.

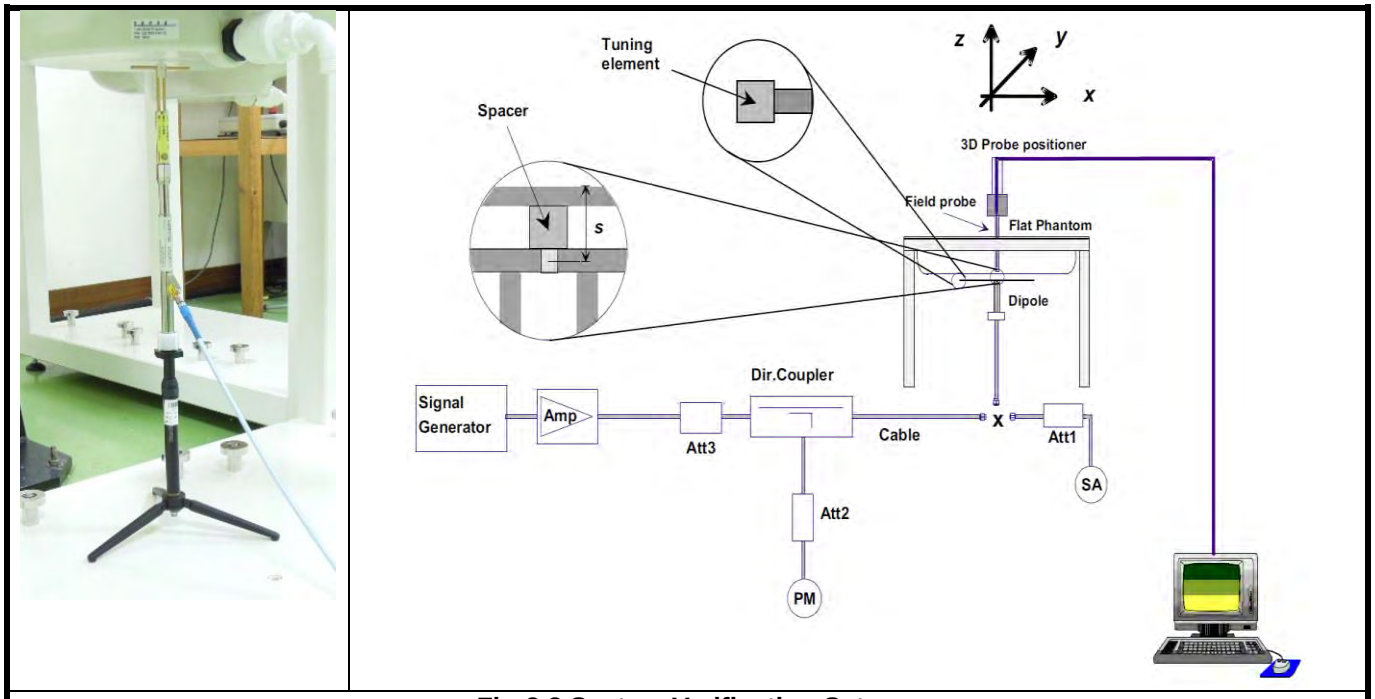

Fig-3.3 System Verification Setup

The validation dipole is placed beneath the flat phantom with the specific spacer in place. The distance spacer is touch the phantom surface with a light pressure at the reference marking and be oriented parallel to the long side of the phantom. The spectrum analyzer measures the forward power at the location of the system check dipole connector. The signal generator is adjusted for the desired forward power (250 mW is used for 700 MHz to 3 GHz, 100 mW is used for 3.5 GHz to 6 GHz) at the dipole connector and the power meter is read at that level. After connecting the cable to the dipole, the signal generator is readjusted for the same reading at power meter.

After system check testing, the SAR result will be normalized to 1W forward input power and compared with the reference SAR value derived from validation dipole certificate report. The deviation of system check should be within 10 %.

3.4 SAR Measurement Procedure

According to the SAR test standard, the recommended procedure for assessing the peak spatial-average SAR value consists of the following steps:

(a) Power reference measurement
(b) Area scan
(c) Zoom scan
(d) Power drift measurement

The SAR measurement procedures for each of test conditions are as follows:

(a) Make EUT to transmit maximum output power
(b) Measure conducted output power through RF cable
(c) Place the EUT in the specific position of phantom
(d) Perform SAR testing steps on the DASY system
(e) Record the SAR value

3.4.1 Area & Zoom Scan Procedure

First Area Scan is used to locate the approximate location(s) of the local peak SAR value(s). The measurement grid within an Area Scan is defined by the grid extent, grid step size and grid offset. Next, in order to determine the EM field distribution in a three-dimensional spatial extension, Zoom Scan is required. The Zoom Scan is performed around the highest E-field value to determine the averaged SAR-distribution over 10 g. According to KDB 865664 D01, the resolution for Area and Zoom scan is specified in the table below.

Items	<= 2 GHz	2-3 GHz	3-4 GHz	4-5 GHz	5-6 GHz
Area Scan (Δx, Δy)	<= 15 mm	<= 12 mm	<= 12 mm	<= 10 mm	<= 10 mm
Zoom Scan (Δx, Δy)	<= 8 mm	<= 5 mm	<= 5 mm	<= 4 mm	<= 4 mm
Zoom Scan (Δz)	<= 5 mm	<= 5 mm	<= 4 mm	<= 3 mm	<= 2 mm
Zoom Scan Volume	>= 30 mm	>= 30 mm	>= 28 mm	>= 25 mm	>= 22 mm

Note:

When zoom scan is required and report SAR is <= 1.4 W/kg, the zoom scan resolution of Δx / Δy (2-3GHz: <= 8 mm, 3-4GHz: <= 7 mm, 4-6GHz: <= 5 mm) may be applied.

3.4.2 Volume Scan Procedure

The volume scan is used for assess overlapping SAR distributions for antennas transmitting in different frequency bands. It is equivalent to an oversized zoom scan used in standalone measurements. The measurement volume will be used to enclose all the simultaneous transmitting antennas. For antennas transmitting simultaneously in different frequency bands, the volume scan is measured separately in each frequency band. In order to sum correctly to compute the 1g aggregate SAR, the EUT remain in the same test position for all measurements and all volume scan use the same spatial resolution and grid spacing. When all volume scan were completed, the software, SEMCAD postprocessor can combine and subsequently superpose these measurement data to calculating the multiband SAR.

3.4.3 Power Drift Monitoring

All SAR testing is under the EUT install full charged battery and transmit maximum output power. In DASY measurement software, the power reference measurement and power drift measurement procedures are used for monitoring the power drift of EUT during SAR test. Both these procedures measure the field at a specified reference position before and after the SAR testing. The software will calculate the field difference in dB. If the power drift more than 5%, the SAR will be retested.

3.4.4 Spatial Peak SAR Evaluation

The procedure for spatial peak SAR evaluation has been implemented according to the test standard. It can be conducted for 1g and 10g, as well as for user-specific masses. The DASY software includes all numerical procedures necessary to evaluate the spatial peak SAR value.

The base for the evaluation is a "cube" measurement. The measured volume must include the 1g and 10g cubes with the highest averaged SAR values. For that purpose, the center of the measured volume is aligned to the interpolated peak SAR value of a previously performed area scan.

The entire evaluation of the spatial peak values is performed within the post-processing engine (SEMCAD). The system always gives the maximum values for the 1g and 10g cubes. The algorithm to find the cube with highest averaged SAR is divided into the following stages:

(a) Extraction of the measured data (grid and values) from the Zoom Scan
(b) Calculation of the SAR value at every measurement point based on all stored data (A/D values and measurement parameters)
(c) Generation of a high-resolution mesh within the measured volume
(d) Interpolation of all measured values form the measurement grid to the high-resolution grid
(e) Extrapolation of the entire 3-D field distribution to the phantom surface over the distance from sensor to surface
(f) Calculation of the averaged SAR within masses of 1g and 10g

3.4.5 SAR Averaged Methods

In DASY, the interpolation and extrapolation are both based on the modified Quadratic Shepard’s method. The interpolation scheme combines a least-square fitted function method and a weighted average method which are the two basic types of computational interpolation and approximation.

Extrapolation routines are used to obtain SAR values between the lowest measurement points and the inner phantom surface. The extrapolation distance is determined by the surface detection distance and the probe sensor offset. The uncertainty increases with the extrapolation distance. To keep the uncertainty within 1% for the 1 g and 10 g cubes, the extrapolation distance should not be larger than 5 mm.

4. SAR Measurement Evaluation

4.1 EUT Configuration and Setting

<Considerations Related to WLAN for Setup and Testing>

In general, various vendor specific external test software and chipset based internal test modes are typically used for SAR measurement. These chipset based test mode utilities are generally hardware and manufacturer dependent, and often include substantial flexibility to reconfigure or reprogram a device. A Wi-Fi device must be configured to transmit continuously at the required data rate, channel bandwidth and signal modulation, using the highest transmission duty factor supported by the test mode tools for SAR measurement. The test frequencies established using test mode must correspond to the actual channel frequencies. When 802.11 frame gaps are accounted for in the transmission, a maximum transmission duty factor of 92 - 96% is typically achievable in most test mode configurations. A minimum transmission duty factor of 85% is required to avoid certain hardware and device implementation issues related to wide range SAR scaling. In addition, a periodic transmission duty factor is required for current generation SAR systems to measure SAR correctly. The reported SAR must be scaled to 100% transmission duty factor to determine compliance at the maximum tune-up tolerance limit.

According to KDB 248227 D01, this device has installed WLAN engineering testing software which can provide continuous transmitting RF signal. During WLAN SAR testing, this device was operated to transmit continuously at the maximum transmission duty with specified transmission mode, operating frequency, lowest data rate, and maximum output power.

Initial Test Configuration

An initial test configuration is determined for OFDM transmission modes in 2.4 GHz and 5 GHz bands according to the channel bandwidth, modulation and data rate combination(s) with the highest maximum output power specified for production units in each standalone and aggregated frequency band. When the same maximum power is specified for multiple transmission modes in a frequency band, the largest channel bandwidth, lowest order modulation, lowest data rate and lowest order 802.11a/g/n/ac mode is used for SAR measurement, on the highest measured output power channel in the initial test configuration, for each frequency band.

Subsequent Test Configuration

SAR measurement requirements for the remaining 802.11 transmission mode configurations that have not been tested in the initial test configuration are determined separately for each standalone and aggregated frequency band, in each exposure condition, according to the maximum output power specified for production units. Additional power measurements may be required to determine if SAR measurements are required for subsequent highest output power channels in a subsequent test configuration. When the highest reported SAR for the initial test configuration according to the initial test position or fixed exposure position requirements, is adjusted by the ratio of the subsequent test configuration to initial test configuration specified maximum output power and the adjusted SAR is ≤ 1.2 W/kg, SAR is not required for that subsequent test configuration.

SAR Test Configuration and Channel Selection

When multiple channel bandwidth configurations in a frequency band have the same specified maximum output power, the initial test configuration is using largest channel bandwidth, lowest order modulation, lowest data rate, and lowest order 802.11 mode (i.e., 802.11a is chosen over 802.11n then 802.11ac or 802.11g is chosen over 802.11n). After an initial test configuration is determined, if multiple test channels have the same measured maximum output power, the channel chosen for SAR measurement is determined according to the following.

1) The channel closest to mid-band frequency is selected for SAR measurement.

2) For channels with equal separation from mid-band frequency; for example, high and low channels or two mid-band channels, the higher frequency (number) channel is selected for SAR measurement.

Test Reduction for U-NII-1 (5.2 GHz) and U-NII-2A (5.3 GHz) Bands

For devices that operate in both U-NII bands using the same transmitter and antenna(s), SAR test reduction is determined according to the following.

1) When the same maximum output power is specified for both bands, begin SAR measurement in U-NII-2A band by applying the OFDM SAR requirements. If the highest reported SAR for a test configuration is ≤ 1.2 W/kg, SAR is not required for U-NII-1 band for that configuration (802.11 mode and exposure condition).

2) When different maximum output power is specified for the bands, begin SAR measurement in the band with higher specified maximum output power. The highest reported SAR for the tested configuration is adjusted by the ratio of lower to higher specified maximum output power for the two bands. When the adjusted SAR is ≤ 1.2 W/kg, SAR is not required for the band with lower maximum output power in that test configuration.

<Considerations Related to Bluetooth for Setup and Testing>

This device has installed Bluetooth engineering testing software which can provide continuous transmitting RF signal. During Bluetooth SAR testing, this device was operated to transmit continuously at the maximum transmission duty with specified transmission mode, operating frequency, lowest data rate, and maximum output power.

The Bluetooth call box has been used during SAR measurement and the EUT was set to DH5 mode at the maximum output power. Its duty factor was calculated as below and the measured SAR for Bluetooth would be scaled to the 100% transmission duty factor to determine compliance.

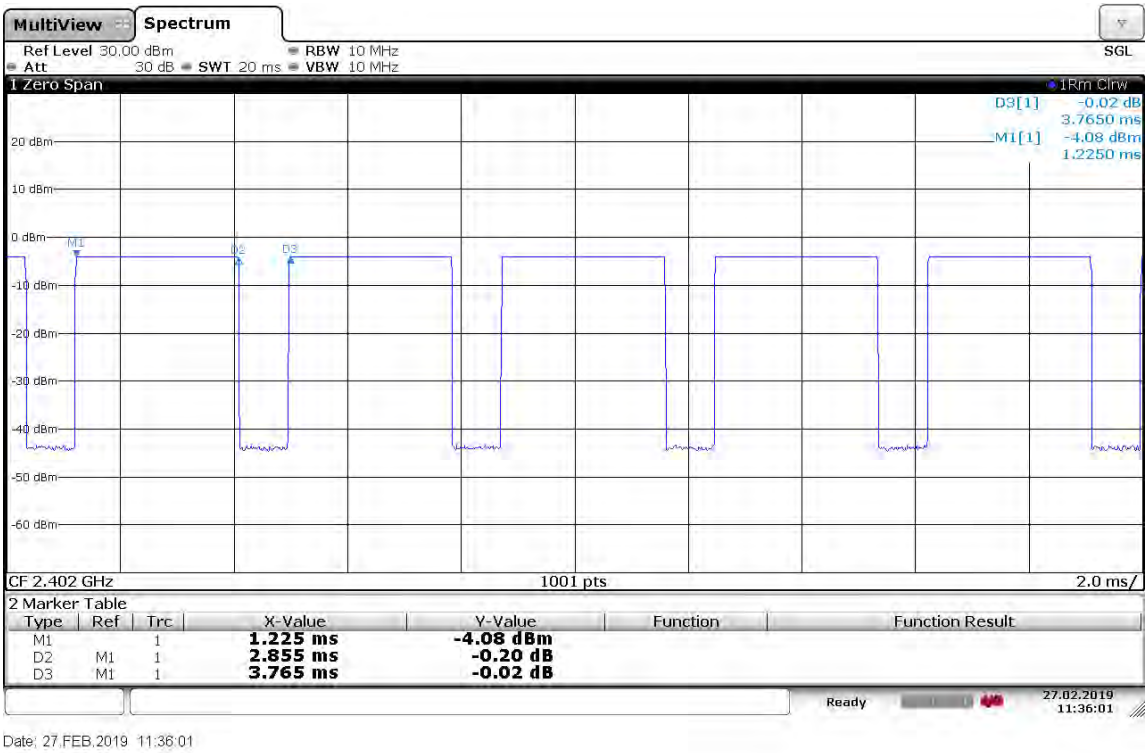

Time-domain plot for Bluetooth transmission signal

The duty factor of Bluetooth signal has been calculated as following.
Duty Factor = Pulse Width / Total Period = 2.855 / 3.765 = 75.8 %

4.2 EUT Testing Position

According to KDB 648474 D04, handsets are tested for SAR compliance in body-worn accessory and other use configurations described in the following subsections.

4.2.1 Body-worn Accessory Exposure Conditions

Body-worn accessory exposure is typically related to voice mode operations when handsets are carried in body-worn accessories. The body-worn accessory procedures in KDB 447498 D01 are used to test for body-worn accessory SAR compliance, without a headset connected to it. This enables the test results for such configuration to be compatible with that required for hotspot mode when the body-worn accessory test separation distance is greater than or equal to that required for hotspot mode. When the reported SAR for a body-worn accessory, measured without a headset connected to the handset, is > 1.2 W/kg, the highest reported SAR configuration for that wireless mode and frequency band should be repeated for that body-worn accessory with a headset attached to the handset.

Body-worn accessories that do not contain metallic or conductive components may be tested according to worst-case exposure configurations, typically according to the smallest test separation distance required for the group of body-worn accessories with similar operating and exposure characteristics. All body-worn accessories containing metallic components are tested in conjunction with the host device.

Body-worn accessory SAR compliance is based on a single minimum test separation distance for all wireless and operating modes applicable to each body-worn accessory used by the host, and according to the relevant voice and/or data mode transmissions and operations. If a body-worn accessory supports voice only operations in its normal and expected use conditions, testing of data mode for body-worn compliance is not required.

A conservative minimum test separation distance for supporting off-the-shelf body-worn accessories that may be acquired by users of consumer handsets is used to test for body-worn accessory SAR compliance. This distance is determined by the handset manufacturer, according to the requirements of Supplement C 01-01. Devices that are designed to operate on the body of users using lanyards and straps, or without requiring additional body-worn accessories, will be tested using a conservative minimum test separation distance <= 5 mm to support compliance.

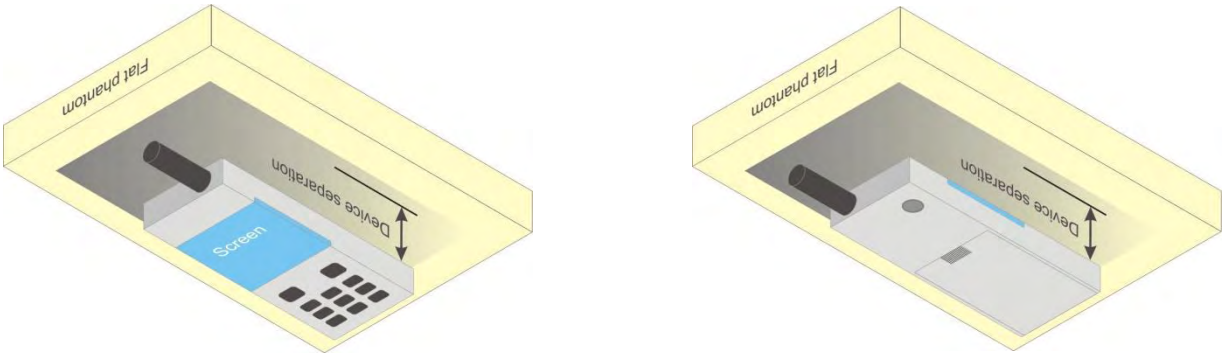

Fig-4.1 Illustration for Body Worn Position

4.3 Tissue Verification

The measuring results for tissue simulating liquid are shown as below.

Test Date	Tissue Type	Frequency (MHz)	Liquid Temp. (℃)	Measured Conductivity (σ)	Measured Permittivity (ε_r)	Target Conductivity (σ)	Target Permittivity (ε_r)	Conductivity Deviation (%)	Permittivity Deviation (%)
Feb. 23, 2019	Body	2450	23.4	2.016	51.542	1.95	52.7	3.38	-2.20
Feb. 23, 2019	Body	5250	23.4	5.555	47.077	5.36	48.9	3.64	-3.73
Feb. 24, 2019	Body	5250	23.2	5.372	48.986	5.36	48.9	0.22	0.18
Feb. 26, 2019	Body	5250	23.5	5.588	46.859	5.36	48.9	4.25	-4.17
Feb. 24, 2019	Body	5600	23.2	5.871	48.311	5.77	48.5	1.75	-0.39
Feb. 26, 2019	Body	5600	23.5	6.027	46.224	5.77	48.5	4.45	-4.69
Feb. 24, 2019	Body	5750	23.2	6.026	48.149	5.94	48.3	1.45	-0.31
Feb. 26, 2019	Body	5750	23.5	6.216	45.95	5.94	48.3	4.65	-4.87
Mar. 04, 2019	Body	5750	23.7	5.728	46.565	5.94	48.3	-3.57	-3.59

Note:

The dielectric properties of the tissue simulating liquid must be measured within 24 hours before the SAR testing and within ±5% of the target values. Liquid temperature during the SAR testing must be within ±2 ℃.

4.4 System Validation

The SAR measurement system was validated according to procedures in KDB 865664 D01. The validation status in tabulated summary is as below.

Test Date	Probe S/N	Calibration Point		Measured Conductivity (σ)	Measured Permittivity (ε_r)	Validation for CW			Validation for Modulation		
						Sensitivity Range	Probe Linearity	Probe Isotropy	Modulation Type	Duty Factor	PAR
Feb. 23, 2019	7472	Body	2450	2.016	51.542	Pass	Pass	Pass	OFDM	N/A	Pass
Feb. 23, 2019	7472	Body	5250	5.555	47.077	Pass	Pass	Pass	OFDM	N/A	Pass
Feb. 24, 2019	7472	Body	5250	5.372	48.986	Pass	Pass	Pass	OFDM	N/A	Pass
Feb. 26, 2019	3898	Body	5250	5.588	46.859	Pass	Pass	Pass	OFDM	N/A	Pass
Feb. 24, 2019	7472	Body	5600	5.871	48.311	Pass	Pass	Pass	OFDM	N/A	Pass
Feb. 26, 2019	3898	Body	5600	6.027	46.224	Pass	Pass	Pass	OFDM	N/A	Pass
Feb. 24, 2019	7472	Body	5750	6.026	48.149	Pass	Pass	Pass	OFDM	N/A	Pass
Feb. 26, 2019	3898	Body	5750	6.216	45.950	Pass	Pass	Pass	OFDM	N/A	Pass
Mar. 04, 2019	3971	Body	5750	5.728	46.565	Pass	Pass	Pass	OFDM	N/A	Pass

4.5 System Verification

The measuring result for system verification is tabulated as below.

Test Date	Mode	Frequency (MHz)	1W Target SAR-1g (W/kg)	Measured SAR-1g (W/kg)	Normalized to 1W SAR-1g (W/kg)	Deviation (%)	Dipole S/N	Probe S/N	DAE S/N
Feb. 23, 2019	Body	2450	50.50	12.70	50.80	0.59	737	7472	1431
Feb. 23, 2019	Body	5250	74.90	7.33	73.30	-2.14	1019	7472	1431
Feb. 24, 2019	Body	5250	74.90	7.81	78.10	4.27	1019	7472	1431
Feb. 26, 2019	Body	5250	74.90	7.14	71.40	-4.67	1019	3898	1277
Feb. 24, 2019	Body	5600	79.30	8.31	83.10	4.79	1019	7472	1431
Feb. 26, 2019	Body	5600	79.30	8.33	83.30	5.04	1019	3898	1277
Feb. 24, 2019	Body	5750	74.50	7.61	76.10	2.15	1019	7472	1431
Feb. 26, 2019	Body	5750	74.50	7.95	79.50	6.71	1019	3898	1277
Mar. 04, 2019	Body	5750	74.50	7.75	77.50	4.03	1019	3971	861

Note:

Comparing to the reference SAR value provided by SPEAG, the validation data should be within its specification of 10 %. The result indicates the system check can meet the variation criterion and the plots can be referred to Appendix A of this report.

4.6 Maximum Output Power

4.6.1 Maximum Target Conducted Power

The maximum conducted average power (Unit: dBm) including tune-up tolerance is shown as below.

Mode	2.4G WLAN (Ant-0 + Ant-1)	5.2G WLAN (Ant-0 + Ant-1)	5.3G WLAN (Ant-0 + Ant-1)	5.6G WLAN (Ant-0 + Ant-1)	5.8G WLAN (Ant-0 + Ant-1)
802.11b	Ch1: 23.0 Ch6: 23.0 Ch11: 23.0	N/A	N/A	N/A	N/A
802.11g	Ch1: 21.5 Ch6: 23.0 Ch11: 20.5	N/A	N/A	N/A	N/A
802.11a	N/A	16.5	16.8	Ch100: 21.0 Ch116: 22.0 Ch120: 22.0 Ch124: 22.0 Ch132: 22.0 Ch140: 19.5 Ch144: 22.0	21.5
802.11n HT20	Ch1: 20.0 Ch6: 22.5 Ch11: 19.0	N/A	N/A	N/A	N/A
802.11n HT40	Ch1: 17.5 Ch6: 20.0 Ch11: 17.5	N/A	N/A	N/A	N/A
802.11ac VHT20	N/A	16.5	17.0	Ch100: 19.0 Ch116: 22.0 Ch120: 22.0 Ch124: 22.0 Ch132: 22.0 Ch140: 16.5 Ch144: 22.0	21.5
802.11ac VHT40	N/A	17.5	16.8	Ch102: 15.5 Ch110: 22.0 Ch118: 22.0 Ch126: 22.0 Ch134: 17.5 Ch142: 22.0	21.5
802.11ac VHT80	N/A	17.0	12.5	Ch106: 15.5 Ch122: 21.5 Ch138: 21.5	22.0

Mode	2.4G Bluetooth
Bluetooth DH	7.0
Bluetooth LE	2.0

4.6.2 Measured Conducted Power Result

The measuring conducted average power (Unit: dBm) is shown as below.

<WLAN 2.4G>

Mode	Channel	Frequency (MHz)	Average Power (Ant-0 + Ant-1)
802.11b	1	2412	22.24
	6	2437	22.23
	11	2462	22.31

<WLAN 5.2G>

Mode	Channel	Frequency (MHz)	Average Power (Ant-0 + Ant-1)
802.11ac (VHT40)	38	5190	16.46
	46	5230	**16.54**

<WLAN 5.6G>

Mode	Channel	Frequency (MHz)	Average Power
802.11ac (VHT40)	102	5510	14.38
	110	5550	**21.55**
	118	5590	21.46
	126	5630	21.39
	134	5670	16.73
	142	5710	21.70

<WLAN 5.8G>

Mode	Channel	Frequency (MHz)	Average Power
802.11ac (VHT80)	155	5775	**21.19**

<Bluetooth>

Mode	Channel	Frequency (MHz)	Average Power
Bluetooth EDR	0	2402	6.19
	39	2441	5.45
	78	2480	**7.00**
Bluetooth LE	0	2402	1.90
	19	2440	1.35
	39	2480	1.86

4.7 SAR Testing Results

4.7.1 SAR Test Reduction Considerations

<KDB 447498 D01, General RF Exposure Guidance>

Testing of other required channels within the operating mode of a frequency band is not required when the reported SAR for the mid-band or highest output power channel is:

(1) ≤ 0.8 W/kg or 2.0 W/kg, for 1-g or 10-g respectively, when the transmission band is ≤ 100 MHz

(2) ≤ 0.6 W/kg or 1.5 W/kg, for 1-g or 10-g respectively, when the transmission band is between 100 MHz and 200 MHz

(3) ≤ 0.4 W/kg or 1.0 W/kg, for 1-g or 10-g respectively, when the transmission band is ≥ 200 MHz

When SAR is not measured at the maximum power level allowed for production units, the measured SAR will be scaled to the maximum tune-up tolerance limit to determine compliance. The scaling factor for the tune-up power is defined as maximum tune-up limit (mW) / measured conducted power (mW). The reported SAR would be calculated by measured SAR x tune-up power scaling factor.

The SAR has been measured with highest transmission duty factor supported by the test mode tools for WLAN and/or Bluetooth. When the transmission duty factor could not achieve 100%, the reported SAR will be scaled to 100% transmission duty factor to determine compliance at the maximum tune-up power. The scaling factor for the duty factor is defined as 100% / transmission duty cycle (%). The reported SAR would be calculated by measured SAR x tune-up power scaling factor x duty cycle scaling factor.

<KDB 248227 D01, SAR Guidance for Wi-Fi Transmitters>

(1) For handsets operating next to ear, hotspot mode or mini-tablet configurations, the initial test position procedures were applied. The test position with the highest extrapolated peak SAR will be used as the initial test position. When the reported SAR of initial test position is <= 0.4 W/kg, SAR testing for remaining test positions is not required. Otherwise, SAR is evaluated at the subsequent highest peak SAR positions until the reported SAR result is <= 0.8 W/kg or all test positions are measured.

(2) For WLAN 2.4 GHz, the highest measured maximum output power channel for DSSS was selected for SAR measurement. When the reported SAR is <= 0.8 W/kg, no further SAR testing is required. Otherwise, SAR is evaluated at the next highest measured output power channel. When any reported SAR is > 1.2 W/kg, SAR is required for the third channel. For OFDM modes (802.11g/n), SAR is not required when the highest reported SAR for DSSS is adjusted by the ratio of OFDM to DSSS specified maximum output power and it is <= 1.2 W/kg.

(3) For WLAN 5 GHz, the initial test configuration was selected according to the transmission mode with the highest maximum output power. When the reported SAR of initial test configuration is > 0.8 W/kg, SAR is required for the subsequent highest measured output power channel until the reported SAR result is <= 1.2 W/kg or all required channels are measured. For other transmission modes, SAR is not required when the highest reported SAR for initial test configuration is adjusted by the ratio of subsequent test configuration to initial test configuration specified maximum output power and it is <= 1.2 W/kg.

(4) For WLAN MIMO mode, the power-based standalone SAR test exclusion or the sum of SAR provision in KDB 447498 to determine simultaneous transmission SAR test exclusion should be applied. Otherwise, SAR for MIMO mode will be measured with all applicable antennas transmitting simultaneously at the specified maximum output power of MIMO operation.

4.7.2 SAR Results for Body Exposure Condition

Plot No.	Band	Mode	Test Position	Separation Distance (mm)	Ch.	EUT Config.	Ant Status	Battery	Holster	Scan handle (gun)	Duty Cycle	Crest Factor	Max. Tune-up Power (dBm)	Measured Conducted Power (dBm)	Scaling Factor	Power Drift (dB)	Measured SAR-1g (W/kg)	Scaled SAR-1g (W/kg)
	WLAN2.4G	802.11b	Front Face	15	11	A2	Ant 0+1	1	-	-	99.30	1.01	23.0	22.31	1.17	-0.16	0.232	0.27
	WLAN2.4G	802.11b	Rear Face	15	11	A2	Ant 0+1	1	-	-	99.30	1.01	23.0	22.31	1.17	0.02	0.178	0.21
	WLAN2.4G	802.11b	Front Face	15	1	A2	Ant 0+1	1	-	-	99.30	1.01	23.0	22.24	1.19	-0.05	0.239	0.29
	WLAN2.4G	802.11b	Front Face	15	6	A2	Ant 0+1	1	-	-	99.30	1.01	23.0	22.23	1.19	0.06	0.189	0.23
	WLAN2.4G	802.11b	Front Face	15	1	A1	Ant 0+1	1	-	-	99.30	1.01	23.0	22.24	1.19	-0.07	0.157	0.19
	WLAN2.4G	802.11b	Front Face	15	1	B1	Ant 0+1	1	-	-	99.30	1.01	23.0	22.24	1.19	0.18	0.204	0.25
	WLAN2.4G	802.11b	Front Face	15	1	B2	Ant 0+1	1	-	-	99.30	1.01	23.0	22.24	1.19	0.18	0.178	0.21
	WLAN2.4G	802.11b	Front Face	0	1	A1	Ant 0+1	1	1	-	99.30	1.01	23.0	22.24	1.19	0.00	0.097	0.12
	WLAN2.4G	802.11b	Front Face	0	1	A2	Ant 0+1	1	1	-	99.30	1.01	23.0	22.24	1.19	0.01	0.143	0.17
	WLAN2.4G	802.11b	Front Face	0	1	B1	Ant 0+1	1	1	-	99.30	1.01	23.0	22.24	1.19	-0.04	0.164	0.20
	WLAN2.4G	802.11b	Front Face	0	1	B2	Ant 0+1	1	1	-	99.30	1.01	23.0	22.24	1.19	-0.18	0.158	0.19
	WLAN2.4G	802.11b	Left Side	0	1	A1	Ant 0+1	1	2	w/	99.30	1.01	23.0	22.24	1.19	0.07	0.258	0.31
01	WLAN2.4G	802.11b	Left Side	0	1	A2	Ant 0+1	1	2	w/	99.30	1.01	23.0	22.24	1.19	-0.11	0.461	**0.55**
	WLAN2.4G	802.11b	Left Side	0	1	B1	Ant 0+1	1	2	w/	99.30	1.01	23.0	22.24	1.19	0.07	0.255	0.31
	WLAN2.4G	802.11b	Left Side	0	1	B2	Ant 0+1	1	2	w/	99.30	1.01	23.0	22.24	1.19	-0.07	0.304	0.37
	WLAN2.4G	802.11b	Front Face	15	1	A1	Ant 0+1	1	-	w/	99.30	1.01	23.0	22.24	1.19	-0.16	0.149	0.18
	WLAN2.4G	802.11b	Front Face	15	1	A2	Ant 0+1	1	-	w/	99.30	1.01	23.0	22.24	1.19	0.08	0.190	0.23
	WLAN2.4G	802.11b	Front Face	15	1	B1	Ant 0+1	1	-	w/	99.30	1.01	23.0	22.24	1.19	-0.09	0.133	0.16
	WLAN2.4G	802.11b	Front Face	15	1	B2	Ant 0+1	1	-	w/	99.30	1.01	23.0	22.24	1.19	-0.17	0.158	0.19
	WLAN2.4G	802.11b	Left Side	0	1	A2	Ant 0+1	2	2	w/	99.30	1.01	23.0	22.24	1.19	-0.03	0.458	0.55
	WLAN2.4G	802.11b	Left Side	0	1	A2	Ant 0+1	3	2	w/	99.30	1.01	23.0	22.24	1.19	0.14	0.450	0.54

Plot No.	Band	Mode	Test Position	Separation Distance (mm)	Ch.	EUT Config.	Ant Status	Battery	Holster	Scan handle (gun)	Duty Cycle	Crest Factor	Max. Tune-up Power (dBm)	Measured Conducted Power (dBm)	Scaling Factor	Power Drift (dB)	Measured SAR-1g (W/kg)	Scaled SAR-1g (W/kg)
	WLAN5.2G	802.11ac VHT40	Front Face	15	46	A2	Ant 0+1	1	-	-	77.90	1.28	17.5	16.54	1.25	0.02	0.047	0.08
	WLAN5.2G	802.11ac VHT40	Rear Face	15	46	A2	Ant 0+1	1	-	-	77.90	1.28	17.5	16.54	1.25	0.13	0.055	0.09
	WLAN5.2G	802.11ac VHT40	Rear Face	15	38	A2	Ant 0+1	1	-	-	77.90	1.28	17.5	16.46	1.27	0.11	0.050	0.08
	WLAN5.2G	802.11ac VHT40	Rear Face	15	46	A1	Ant 0+1	1	-	-	77.90	1.28	17.5	16.54	1.25	0.06	0.051	0.08
	WLAN5.2G	802.11ac VHT40	Rear Face	15	46	B1	Ant 0+1	1	-	-	77.90	1.28	17.5	16.54	1.25	-0.1	0.042	0.07
	WLAN5.2G	802.11ac VHT40	Rear Face	15	46	B2	Ant 0+1	1	-	-	77.90	1.28	17.5	16.54	1.25	0.02	0.043	0.07
	WLAN5.2G	802.11ac VHT40	Front Face	0	46	A1	Ant 0+1	1	1	-	77.90	1.28	17.5	16.54	1.25	0.00	<0.001	0.00
	WLAN5.2G	802.11ac VHT40	Front Face	0	46	A2	Ant 0+1	1	1	-	77.90	1.28	17.5	16.54	1.25	0.00	<0.001	0.00
	WLAN5.2G	802.11ac VHT40	Front Face	0	46	B1	Ant 0+1	1	1	-	77.90	1.28	17.5	16.54	1.25	0.00	<0.001	0.00
	WLAN5.2G	802.11ac VHT40	Front Face	0	46	B2	Ant 0+1	1	1	-	77.90	1.28	17.5	16.54	1.25	0.00	<0.001	0.00
	WLAN5.2G	802.11ac VHT40	Left Side	0	46	A1	Ant 0+1	1	2	w/	77.90	1.28	17.5	16.54	1.25	-0.08	0.114	0.18
02	WLAN5.2G	802.11ac VHT40	Left Side	0	46	A2	Ant 0+1	1	2	w/	77.90	1.28	17.5	16.54	1.25	0.02	0.132	**0.21**
	WLAN5.2G	802.11ac VHT40	Left Side	0	46	B1	Ant 0+1	1	2	w/	77.90	1.28	17.5	16.54	1.25	-0.01	0.118	0.19
	WLAN5.2G	802.11ac VHT40	Left Side	0	46	B2	Ant 0+1	1	2	w/	77.90	1.28	17.5	16.54	1.25	0.05	0.113	0.18
	WLAN5.2G	802.11ac VHT40	Front Face	15	46	A1	Ant 0+1	1	-	w/	77.90	1.28	17.5	16.54	1.25	0.06	0.045	0.07
	WLAN5.2G	802.11ac VHT40	Front Face	15	46	A2	Ant 0+1	1	-	w/	77.90	1.28	17.5	16.54	1.25	0.01	0.046	0.07
	WLAN5.2G	802.11ac VHT40	Front Face	15	46	B1	Ant 0+1	1	-	w/	77.90	1.28	17.5	16.54	1.25	0.09	0.04	0.06
	WLAN5.2G	802.11ac VHT40	Front Face	15	46	B2	Ant 0+1	1	-	w/	77.90	1.28	17.5	16.54	1.25	-0.16	0.04	0.06
	WLAN5.2G	802.11ac VHT40	Left Side	0	46	A2	Ant 0+1	2	2	w/	77.90	1.28	17.5	16.54	1.25	-0.06	0.121	0.19
	WLAN5.2G	802.11ac VHT40	Left Side	0	46	A2	Ant 0+1	3	2	w/	77.90	1.28	17.5	16.54	1.25	0.01	0.115	0.18

Note: “<0.001” means there is no SAR value or the SAR is too low to be measured.

Plot No.	Band	Mode	Test Position	Separation Distance (mm)	Ch.	EUT Config.	Ant Status	Battery	Holster	Scan handle (gun)	Duty Cycle	Crest Factor	Max. Tune-up Power (dBm)	Measured Conducted Power (dBm)	Scaling Factor	Power Drift (dB)	Measured SAR-1g (W/kg)	Scaled SAR-1g (W/kg)
	WLAN5.6G	802.11ac VHT40	Front Face	15	142	A2	Ant 0+1	1	-	-	77.90	1.28	22.0	21.70	1.07	0.06	0.166	0.23
	WLAN5.6G	802.11ac VHT40	Rear Face	15	142	A2	Ant 0+1	1	-	-	77.90	1.28	22.0	21.70	1.07	-0.13	0.21	0.29
	WLAN5.6G	802.11ac VHT40	Rear Face	15	102	A2	Ant 0+1	1	-	-	77.90	1.28	15.5	14.38	1.29	0.03	0.021	0.03
	WLAN5.6G	802.11ac VHT40	Rear Face	15	110	A2	Ant 0+1	1	-	-	77.90	1.28	22.0	21.55	1.11	-0.08	0.222	0.32
	WLAN5.6G	802.11ac VHT40	Rear Face	15	118	A2	Ant 0+1	1	-	-	77.90	1.28	22.0	21.46	1.13	0.02	0.200	0.29
	WLAN5.6G	802.11ac VHT40	Rear Face	15	126	A2	Ant 0+1	1	-	-	77.90	1.28	22.0	21.39	1.15	0.09	0.198	0.29
	WLAN5.6G	802.11ac VHT40	Rear Face	15	134	A2	Ant 0+1	1	-	-	77.90	1.28	17.5	16.73	1.19	-0.16	0.081	0.12
	WLAN5.6G	802.11ac VHT40	Rear Face	15	110	A1	Ant 0+1	1	-	-	77.90	1.28	22.0	21.55	1.11	0.05	0.19	0.27
	WLAN5.6G	802.11ac VHT40	Rear Face	15	110	B1	Ant 0+1	1	-	-	77.90	1.28	22.0	21.55	1.11	-0.11	0.157	0.22
	WLAN5.6G	802.11ac VHT40	Rear Face	15	110	B2	Ant 0+1	1	-	-	77.90	1.28	22.0	21.55	1.11	0.02	0.16	0.23
	WLAN5.6G	802.11ac VHT40	Front Face	0	110	A1	Ant 0+1	1	1	-	77.90	1.28	22.0	21.55	1.11	-0.06	0.129	0.18
	WLAN5.6G	802.11ac VHT40	Front Face	0	110	A2	Ant 0+1	1	1	-	77.90	1.28	22.0	21.55	1.11	-0.10	0.133	0.19
	WLAN5.6G	802.11ac VHT40	Front Face	0	110	B1	Ant 0+1	1	1	-	77.90	1.28	22.0	21.55	1.11	0.02	0.124	0.18
	WLAN5.6G	802.11ac VHT40	Front Face	0	110	B2	Ant 0+1	1	1	-	77.90	1.28	22.0	21.55	1.11	0.01	0.127	0.18
	WLAN5.6G	802.11ac VHT40	Left Side	0	110	A1	Ant 0+1	1	2	w/	77.90	1.28	22.0	21.55	1.11	0.07	0.524	0.74
04	WLAN5.6G	802.11ac VHT40	Left Side	0	110	A2	Ant 0+1	1	2	w/	77.90	1.28	22.0	21.55	1.11	-0.17	0.568	**0.81**
	WLAN5.6G	802.11ac VHT40	Left Side	0	110	B1	Ant 0+1	1	2	w/	77.90	1.28	22.0	21.55	1.11	-0.11	0.476	0.68
	WLAN5.6G	802.11ac VHT40	Left Side	0	110	B2	Ant 0+1	1	2	w/	77.90	1.28	22.0	21.55	1.11	0.12	0.485	0.69
	WLAN5.6G	802.11ac VHT40	Left Side	0	102	A2	Ant 0+1	1	2	w/	77.90	1.28	15.5	14.38	1.29	0.02	0.187	0.31
	WLAN5.6G	802.11ac VHT40	Left Side	0	118	A2	Ant 0+1	1	2	w/	77.90	1.28	22.0	21.46	1.13	-0.16	0.545	0.79
	WLAN5.6G	802.11ac VHT40	Left Side	0	126	A2	Ant 0+1	1	2	w/	77.90	1.28	22.0	21.39	1.15	0.06	0.553	0.81
	WLAN5.6G	802.11ac VHT40	Left Side	0	134	A2	Ant 0+1	1	2	w/	77.90	1.28	17.5	16.73	1.19	-0.15	0.282	0.43
	WLAN5.6G	802.11ac VHT40	Left Side	0	142	A2	Ant 0+1	1	2	w/	77.90	1.28	22.0	21.70	1.07	0.02	0.537	0.74
	WLAN5.6G	802.11ac VHT40	Front Face	15	110	A1	Ant 0+1	1	-	w/	77.90	1.28	22.0	21.55	1.11	0.06	0.168	0.24
	WLAN5.6G	802.11ac VHT40	Front Face	15	110	A2	Ant 0+1	1	-	w/	77.90	1.28	22.0	21.55	1.11	-0.16	0.208	0.30
	WLAN5.6G	802.11ac VHT40	Front Face	15	110	B1	Ant 0+1	1	-	w/	77.90	1.28	22.0	21.55	1.11	0.05	0.184	0.26
	WLAN5.6G	802.11ac VHT40	Front Face	15	110	B2	Ant 0+1	1	-	w/	77.90	1.28	22.0	21.55	1.11	0.01	0.179	0.25
	WLAN5.6G	802.11ac VHT40	Left Side	0	110	A2	Ant 0+1	2	2	w/	77.90	1.28	22.0	21.55	1.11	-0.10	0.547	0.78
	WLAN5.6G	802.11ac VHT40	Left Side	0	110	A2	Ant 0+1	3	2	w/	77.90	1.28	22.0	21.55	1.11	0.03	0.553	0.79

Note: “<0.001” means there is no SAR value or the SAR is too low to be measured.

Plot No.	Band	Mode	Test Position	Separation Distance (mm)	Ch.	EUT Config.	Ant Status	Battery	Holster	Scan handle (gun)	Duty Cycle	Crest Factor	Max. Tune-up Power (dBm)	Measured Conducted Power (dBm)	Scaling Factor	Power Drift (dB)	Measured SAR-1g (W/kg)	Scaled SAR-1g (W/kg)
	WLAN5.8G	802.11ac VHT80	Front Face	15	155	A2	Ant 0+1	1	-	-	64.00	1.56	22.0	21.19	1.21	0.15	0.129	0.24
	WLAN5.8G	802.11ac VHT80	Rear Face	15	155	A2	Ant 0+1	1	-	-	64.00	1.56	22.0	21.19	1.21	0.15	0.211	0.40
	WLAN5.8G	802.11ac VHT80	Rear Face	15	155	A1	Ant 0+1	1	-	-	64.00	1.56	22.0	21.19	1.21	-0.02	0.191	0.36
	WLAN5.8G	802.11ac VHT80	Rear Face	15	155	B1	Ant 0+1	1	-	-	64.00	1.56	22.0	21.19	1.21	0.09	0.162	0.31
	WLAN5.8G	802.11ac VHT80	Rear Face	15	155	B2	Ant 0+1	1	-	-	64.00	1.56	22.0	21.19	1.21	-0.16	0.16	0.30
	WLAN5.8G	802.11ac VHT80	Front Face	0	155	A1	Ant 0+1	1	1	-	64.00	1.56	22.0	21.19	1.21	-0.06	0.133	0.25
	WLAN5.8G	802.11ac VHT80	Front Face	0	155	A2	Ant 0+1	1	1	-	64.00	1.56	22.0	21.19	1.21	0.09	0.156	0.29
	WLAN5.8G	802.11ac VHT80	Front Face	0	155	B1	Ant 0+1	1	1	-	64.00	1.56	22.0	21.19	1.21	-0.11	0.126	0.24
	WLAN5.8G	802.11ac VHT80	Front Face	0	155	B2	Ant 0+1	1	1	-	64.00	1.56	22.0	21.19	1.21	0.04	0.135	0.25
	WLAN5.8G	802.11ac VHT80	Left Side	0	155	A1	Ant 0+1	1	2	w/	64.00	1.56	22.0	21.19	1.21	-0.03	0.434	0.82
05	WLAN5.8G	802.11ac VHT80	Left Side	0	155	A2	Ant 0+1	1	2	w/	64.00	1.56	22.0	21.19	1.21	-0.09	0.564	**1.06**
	WLAN5.8G	802.11ac VHT80	Left Side	0	155	B1	Ant 0+1	1	2	w/	64.00	1.56	22.0	21.19	1.21	0.05	0.495	0.93
	WLAN5.8G	802.11ac VHT80	Left Side	0	155	B2	Ant 0+1	1	2	w/	64.00	1.56	22.0	21.19	1.21	0.12	0.459	0.87
	WLAN5.8G	802.11ac VHT80	Front Face	15	155	A1	Ant 0+1	1	-	w/	64.00	1.56	22.0	21.19	1.21	0.02	0.122	0.23
	WLAN5.8G	802.11ac VHT80	Front Face	15	155	A2	Ant 0+1	1	-	w/	64.00	1.56	22.0	21.19	1.21	0.01	0.125	0.24
	WLAN5.8G	802.11ac VHT80	Front Face	15	155	B1	Ant 0+1	1	-	w/	64.00	1.56	22.0	21.19	1.21	-0.16	0.101	0.19
	WLAN5.8G	802.11ac VHT80	Front Face	15	155	B2	Ant 0+1	1	-	w/	64.00	1.56	22.0	21.19	1.21	0.05	0.104	0.20
	WLAN5.8G	802.11ac VHT80	Left Side	0	155	A2	Ant 0+1	2	2	w/	64.00	1.56	22.0	21.19	1.21	0.05	0.505	0.95
	WLAN5.8G	802.11ac VHT80	Left Side	0	155	A2	Ant 0+1	3	2	w/	64.00	1.56	22.0	21.19	1.21	0.06	0.509	0.96
	BT	BDR	Front Face	15	78	A2	Ant 0	1	-	-	75.80	1.32	7.0	7.00	1.00	0.09	0.00229	0.00
	BT	BDR	Rear Face	15	78	A2	Ant 0	1	-	-	75.80	1.32	7.0	7.00	1.00	-0.03	0.00175	0.00
	BT	BDR	Front Face	15	0	A2	Ant 0	1	-	-	75.80	1.32	7.0	6.19	1.21	0.10	0.00218	0.00
	BT	BDR	Front Face	15	39	A2	Ant 0	1	-	-	75.80	1.32	7.0	5.45	1.43	0.12	0.00187	0.00
	BT	BDR	Front Face	15	78	A1	Ant 0	1	-	-	75.80	1.32	7.0	7.00	1.00	-0.03	0.00155	0.00
	BT	BDR	Front Face	15	78	B1	Ant 0	1	-	-	75.80	1.32	7.0	7.00	1.00	0.02	0.00202	0.00
	BT	BDR	Front Face	15	78	B2	Ant 0	1	-	-	75.80	1.32	7.0	7.00	1.00	-0.18	0.00175	0.00
	BT	BDR	Front Face	0	78	A1	Ant 0	1	1	-	75.80	1.32	7.0	7.00	1.00	-0.15	0.00096	0.00
	BT	BDR	Front Face	0	78	A2	Ant 0	1	1	-	75.80	1.32	7.0	7.00	1.00	-0.16	0.00141	0.00
	BT	BDR	Front Face	0	78	B1	Ant 0	1	1	-	75.80	1.32	7.0	7.00	1.00	0.01	0.00162	0.00
	BT	BDR	Front Face	0	78	B2	Ant 0	1	1	-	75.80	1.32	7.0	7.00	1.00	0.18	0.00156	0.00
	BT	BDR	Left Side	0	78	A1	Ant 0	1	2	w/	75.80	1.32	7.0	7.00	1.00	0.07	0.00254	0.00
06	BT	BDR	Left Side	0	78	A2	Ant 0	1	2	w/	75.80	1.32	7.0	7.00	1.00	-0.17	0.00455	**0.01**
	BT	BDR	Left Side	0	78	B1	Ant 0	1	2	w/	75.80	1.32	7.0	7.00	1.00	0.18	0.00251	0.00
	BT	BDR	Left Side	0	78	B2	Ant 0	1	2	w/	75.80	1.32	7.0	7.00	1.00	-0.06	0.00300	0.00
	BT	BDR	Front Face	15	78	A1	Ant 0	1	-	w/	75.80	1.32	7.0	7.00	1.00	0.08	0.00147	0.00
	BT	BDR	Front Face	15	78	A2	Ant 0	1	-	w/	75.80	1.32	7.0	7.00	1.00	-0.05	0.00188	0.00
	BT	BDR	Front Face	15	78	B1	Ant 0	1	-	w/	75.80	1.32	7.0	7.00	1.00	0.19	0.00131	0.00
	BT	BDR	Front Face	15	78	B2	Ant 0	1	-	w/	75.80	1.32	7.0	7.00	1.00	-0.16	0.00156	0.00
	BT	BDR	Left Side	0	78	A2	Ant 0	2	2	w/	75.80	1.32	7.0	7.00	1.00	-0.14	0.00452	0.01
	BT	BDR	Left Side	0	78	A2	Ant 0	3	2	w/	75.80	1.32	7.0	7.00	1.00	-0.07	0.00444	0.01

4.7.3 SAR Measurement Variability

According to KDB 865664 D01, SAR measurement variability was assessed for each frequency band, which is determined by the SAR probe calibration point and tissue-equivalent medium used for the device measurements. When both head and body tissue-equivalent media are required for SAR measurements in a frequency band, the variability measurement procedures should be applied to the tissue medium with the highest measured SAR, using the highest measured SAR configuration for that tissue-equivalent medium. Alternatively, if the highest measured SAR for both head and body tissue-equivalent media are ≤ 1.45 W/kg and the ratio of these highest SAR values, i.e., largest divided by smallest value, is ≤ 1.10, the highest SAR configuration for either head or body tissue-equivalent medium may be used to perform the repeated measurement. These additional measurements are repeated after the completion of all measurements requiring the same head or body tissue-equivalent medium in a frequency band. The test device should be returned to ambient conditions (normal room temperature) with the battery fully charged before it is re-mounted on the device holder for the repeated measurement(s) to minimize any unexpected variations in the repeated results.

Since all the measured SAR are less than 0.8 W/kg, the repeated measurement is not required.

4.7.4 Simultaneous Multi-band Transmission Evaluation

<Possibilities of Simultaneous Transmission>

The simultaneous transmission possibilities for this device are listed as below.

Simultaneous TX Combination	Capable Transmit Configurations	Body Exposure Condition
1	WLAN 2.4G + NFC	Yes
2	WLAN 5G + NFC	Yes
3	BT + NFC	Yes

Note :

1. The WLAN 2.4G and WLAN 5G cannot transmit simultaneously.
2. The WLAN and Bluetooth cannot transmit simultaneously.

Test Engineer：Isaac Liao, and James Chu

5. Calibration of Test Equipment

Equipment	Manufacturer	Model	SN	Cal. Date	Cal. Interval
System Validation Dipole	SPEAG	D2450V2	737	Aug. 24, 2018	1 Year
System Validation Dipole	SPEAG	D5GHzV2	1019	Mar. 22, 2018	1 Year
Dosimetric E-Field Probe	SPEAG	EX3DV4	3898	Jun. 26, 2018	1 Year
Dosimetric E-Field Probe	SPEAG	EX3DV4	3971	Mar. 26, 2018	1 Year
Dosimetric E-Field Probe	SPEAG	EX3DV4	7472	Aug. 29, 2018	1 Year
Data Acquisition Electronics	SPEAG	DAE4	861	May. 30, 2018	1 Year
Data Acquisition Electronics	SPEAG	DAE4	1277	Jan. 24, 2019	1 Year
Data Acquisition Electronics	SPEAG	DAE4	1431	Mar. 16, 2018	1 Year
Spectrum Analyzer	R&S	FSL6	102006	Mar. 23, 2018	1 Year
ENA Series Network Analyzer	Agilent	E5071C	MY46214281	Jun. 08, 2018	1 Year
MXG Analong Signal Generator	Agilent	N5181A	MY50143868	Jul. 03, 2018	1 Year
Vector Signal Generator	Anritsu	MG3710A	6201599977	Mar. 16, 2018	1 Year
Power Meter	Anritsu	ML2495A	1218009	Jul. 03, 2018	1 Year
Power Sensor	Anritsu	MA2411B	1207252	Jul. 03, 2018	1 Year
Thermometer	YFE	YF-160A	130504591	Mar. 23, 2018	1 Year

6. Measurement Uncertainty

According to KDB 865664 D01, SAR measurement uncertainty analysis is required in SAR reports only when the highest measured SAR in a frequency band is ≥ 1.5 W/kg for 1-g SAR, and ≥ 3.75 W/kg for 10-g SAR. The procedures described in IEEE Std 1528-2013 should be applied. The expanded SAR measurement uncertainty must be ≤ 30 %, for a confidence interval of k = 2. When the highest measured SAR within a frequency band is < 1.5 W/kg for 1-g and < 3.75 W/kg for 10-g, the extensive SAR measurement uncertainty analysis described in IEEE Std 1528-2013 is not required in SAR reports submitted for equipment approval. Hence, the measurement uncertainty analysis is not required in this SAR report because the test result met the condition.

7. Information of the Testing Laboratories

We, Bureau Veritas Consumer Products Services (H.K.) Ltd., Taoyuan Branch, were founded in 1988 to provide our best service in EMC, Radio, Telecom and Safety consultation. Our laboratories are accredited and approved according to ISO/IEC 17025.

If you have any comments, please feel free to contact us at the following:

Taiwan HwaYa EMC/RF/Safety/Telecom Lab:
Add: No. 19, Hwa Ya 2nd Rd, Wen Hwa Vil., Kwei Shan Hsiang, Taoyuan Hsien 333, Taiwan, R.O.C.
Tel: 886-3-318-3232
Fax: 886-3-327-0892

Taiwan LinKo EMC/RF Lab:
Add: No. 47-2, 14th Ling, Chia Pau Vil., Linkou Dist., New Taipei City 244, Taiwan, R.O.C.
Tel: 886-2-2605-2180
Fax: 886-2-2605-1924

Taiwan HsinChu EMC/RF Lab:
Add: E-2, No.1, Li Hsin 1st Road, Hsinchu Science Park, Hsinchu City 30078, Taiwan, R.O.C.
Tel: 886-3-593-5343
Fax: 886-3-593-5342

Email: service.adt@tw.bureauveritas.com
Web Site: www.bureauveritas-adt.com

The road map of all our labs can be found in our web site also.

---END---

Appendix A. SAR Plots of System Verification

The plots for system verification with largest deviation for each SAR system combination are shown as follows.

System Check_B2450_190223

DUT: Dipole 2450 MHz; Type: D2450V2; SN: 737

Communication System: CW; Frequency: 2450 MHz;Duty Cycle: 1:1
Medium: B19T27N2_0223 Medium parameters used: f = 2450 MHz; σ = 2.016 S/m; ε_r = 51.542; ρ = 1000 kg/m^3
Ambient Temperature：23.6 ℃ ; Liquid Temperature：23.4 ℃

DASY5 Configuration:
- Probe: EX3DV4 - SN7472; ConvF(7.84, 7.84, 7.84); Calibrated: 2018/08/29
- Sensor-Surface: 1.4mm (Mechanical Surface Detection)
- Electronics: DAE4 Sn1431; Calibrated: 2018/03/16
- Phantom: ELI Phantom_1204; Type: QDOVA002AA;
- Measurement SW: DASY52, Version 52.10 (2); SEMCAD X Version 14.6.12 (7450)

Pin=250mW/Area Scan (81x81x1): Interpolated grid: dx=1.200 mm, dy=1.200 mm
Maximum value of SAR (interpolated) = 21.4 W/kg

Pin=250mW/Zoom Scan (7x7x7)/Cube 0: Measurement grid: dx=5mm, dy=5mm, dz=5mm
Reference Value = 107.1 V/m; Power Drift = -0.15 dB
Peak SAR (extrapolated) = 26.8 W/kg
SAR(1 g) = 12.7 W/kg; SAR(10 g) = 5.81 W/kg
Maximum value of SAR (measured) = 21.6 W/kg

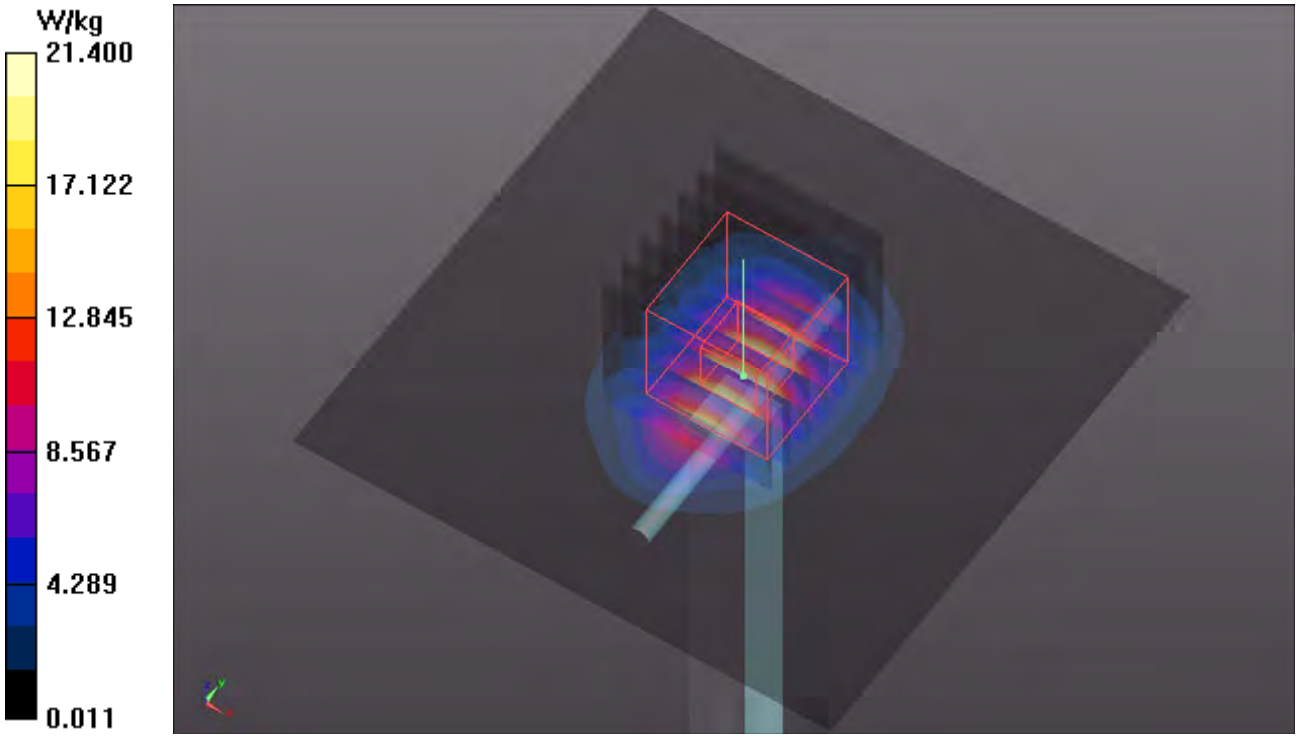

Test Laboratory: Bureau Veritas ADT SAR/HAC Testing Lab Date: 2019/02/26

System Check_B5250_190226

DUT: Dipole 5 GHz; Type: D5GHzV2; SN: 1019

Communication System: CW; Frequency: 5250 MHz;Duty Cycle: 1:1
Medium: B34T60N1_0226 Medium parameters used: f = 5250 MHz; σ = 5.588 S/m; ε_r = 46.859; ρ = 1000 kg/m^3
Ambient Temperature：23.5 ℃ ; Liquid Temperature：23.3 ℃

DASY5 Configuration:
- Probe: EX3DV4 - SN3898; ConvF(4.95, 4.95, 4.95); Calibrated: 2018/06/26
- Sensor-Surface: 1.4mm (Mechanical Surface Detection)
- Electronics: DAE4 Sn1277; Calibrated: 2019/01/24
- Phantom: ELI Phantom_1245; Type: QDOVA;
- Measurement SW: DASY52, Version 52.10 (2); SEMCAD X Version 14.6.12 (7450)

Pin=100mW/Area Scan (91x91x1): Interpolated grid: dx=1.000 mm, dy=1.000 mm
Maximum value of SAR (interpolated) = 18.9 W/kg

Pin=100mW/Zoom Scan (7x7x12)/Cube 0: Measurement grid: dx=4mm, dy=4mm, dz=2mm
Reference Value = 67.61 V/m; Power Drift = -0.01 dB
Peak SAR (extrapolated) = 36.6 W/kg
SAR(1 g) = 7.14 W/kg; SAR(10 g) = 2.02 W/kg
Maximum value of SAR (measured) = 20.9 W/kg

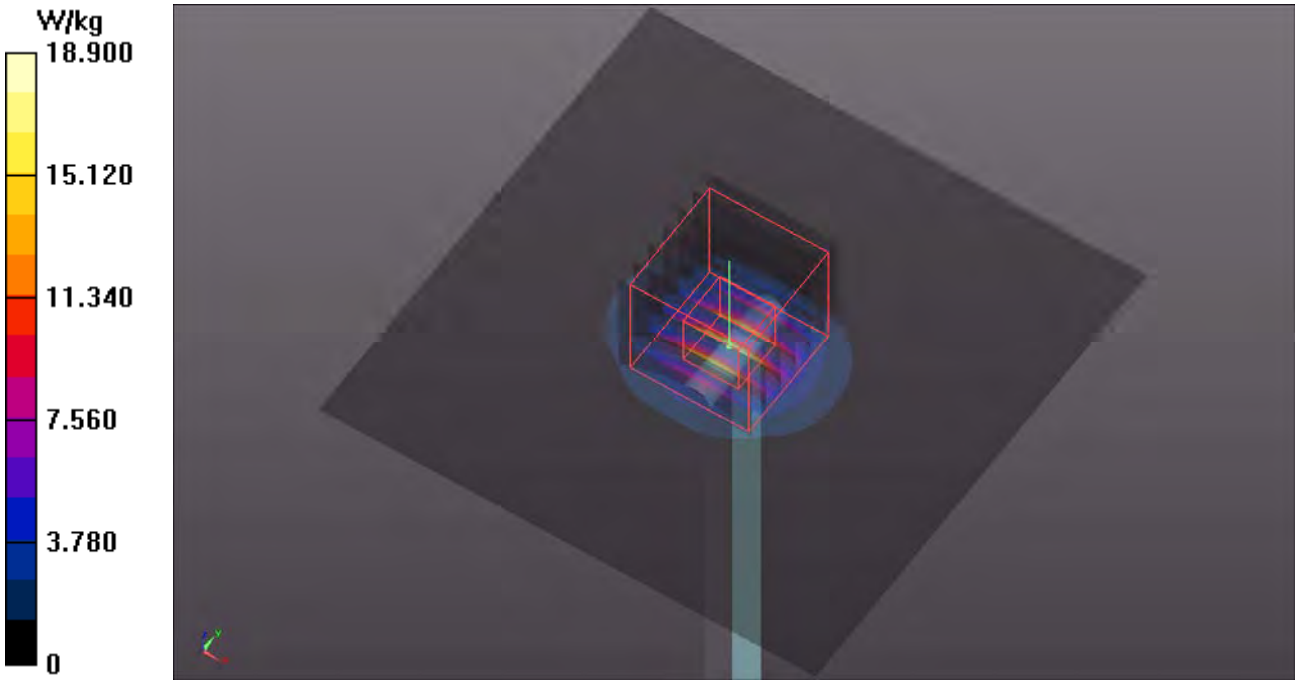

Test Laboratory: Bureau Veritas ADT SAR/HAC Testing Lab Date: 2019/02/26

System Check_B5600_190226

DUT: Dipole 5 GHz; Type: D5GHzV2; SN: 1019

Communication System: CW; Frequency: 5600 MHz;Duty Cycle: 1:1
Medium: B34T60N1_0226 Medium parameters used: f = 5600 MHz; σ = 6.027 S/m; ε_r = 46.224; ρ = 1000 kg/m^3
Ambient Temperature：23.5 ℃ ; Liquid Temperature：23.3 ℃

DASY5 Configuration:
- Probe: EX3DV4 - SN3898; ConvF(4.17, 4.17, 4.17); Calibrated: 2018/06/26
- Sensor-Surface: 1.4mm (Mechanical Surface Detection)
- Electronics: DAE4 Sn1277; Calibrated: 2019/01/24
- Phantom: ELI Phantom_1245; Type: QDOVA;
- Measurement SW: DASY52, Version 52.10 (2); SEMCAD X Version 14.6.12 (7450)

Pin=100mW/Area Scan (91x91x1): Interpolated grid: dx=1.000 mm, dy=1.000 mm
Maximum value of SAR (interpolated) = 20.2 W/kg

Pin=100mW/Zoom Scan (7x7x12)/Cube 0: Measurement grid: dx=4mm, dy=4mm, dz=2mm
Reference Value = 68.45 V/m; Power Drift = -0.18 dB
Peak SAR (extrapolated) = 36.4 W/kg
SAR(1 g) = 8.33 W/kg; SAR(10 g) = 2.39 W/kg
Maximum value of SAR (measured) = 21.7 W/kg

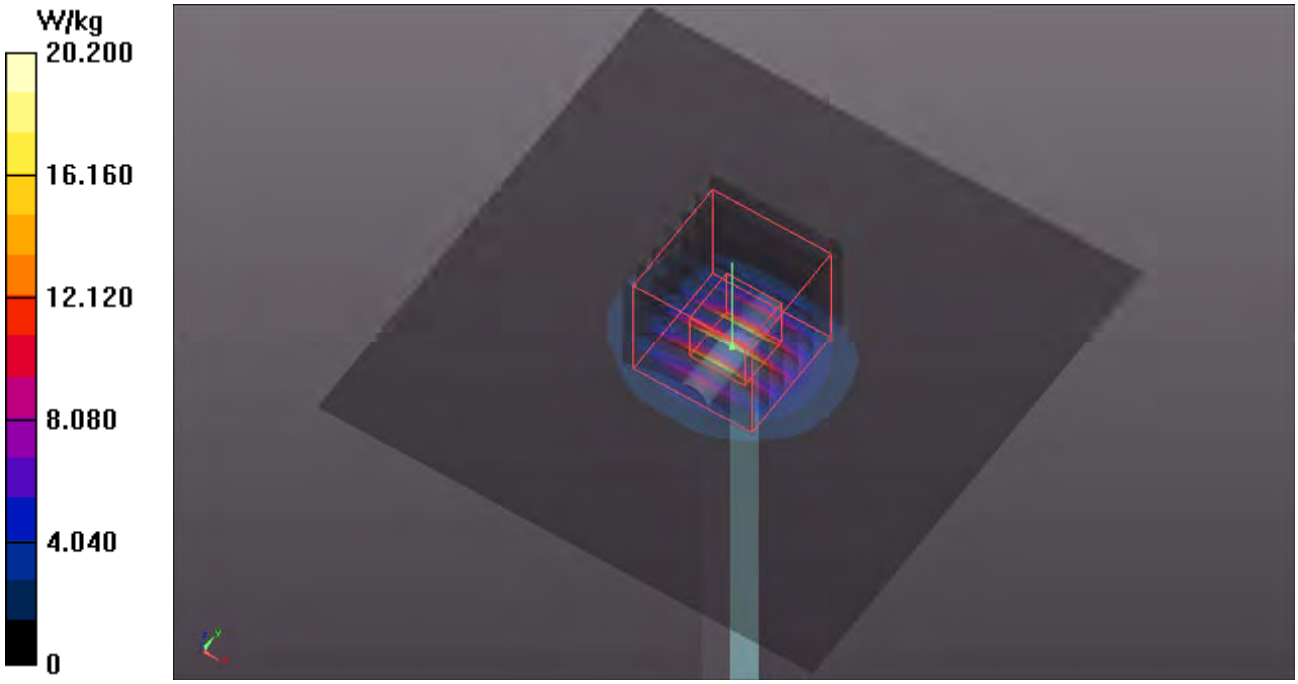

Test Laboratory: Bureau Veritas ADT SAR/HAC Testing Lab Date: 2019/02/26

System Check_B5750_190226

DUT: Dipole 5 GHz; Type: D5GHzV2; SN: 1019

Communication System: CW; Frequency: 5750 MHz;Duty Cycle: 1:1
Medium: B34T60N1_0226 Medium parameters used: f = 5750 MHz; σ = 6.216 S/m; ε_r = 45.95; ρ = 1000 kg/m^3
Ambient Temperature：23.5 ℃ ; Liquid Temperature：23.3 ℃

DASY5 Configuration:
- Probe: EX3DV4 - SN3898; ConvF(4.45, 4.45, 4.45); Calibrated: 2018/06/26
- Sensor-Surface: 1.4mm (Mechanical Surface Detection)
- Electronics: DAE4 Sn1277; Calibrated: 2018/01/18
- Phantom: ELI Phantom_1245; Type: QDOVA;
- Measurement SW: DASY52, Version 52.10 (2); SEMCAD X Version 14.6.12 (7450)

Pin=100mW/Area Scan (91x91x1): Interpolated grid: dx=1.000 mm, dy=1.000 mm
Maximum value of SAR (interpolated) = 18.7 W/kg

Pin=100mW/Zoom Scan (7x7x12)/Cube 0: Measurement grid: dx=4mm, dy=4mm, dz=2mm
Reference Value = 56.73 V/m; Power Drift = -0.08 dB
Peak SAR (extrapolated) = 33.8 W/kg
SAR(1 g) = 7.95 W/kg; SAR(10 g) = 2.21 W/kg
Maximum value of SAR (measured) = 20.3 W/kg

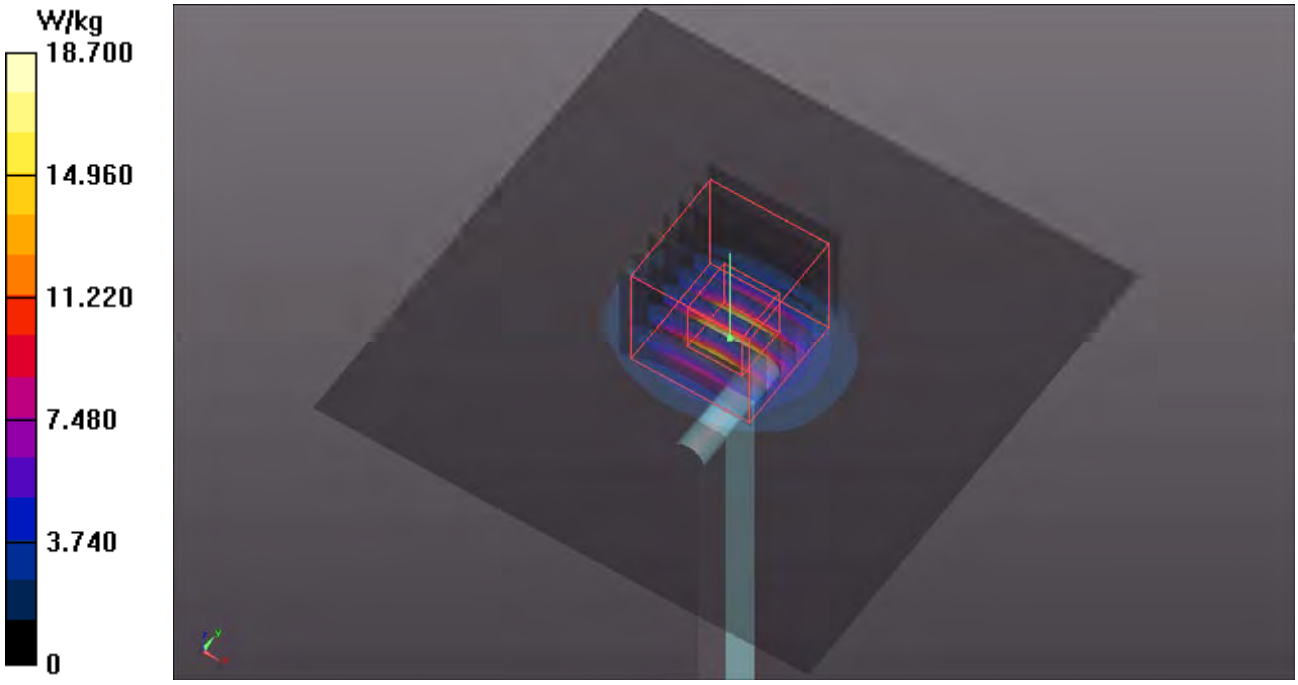

Appendix B. SAR Plots of SAR Measurement

The SAR plots for highest measured SAR in each exposure configuration, wireless mode and frequency band combination, and measured SAR > 1.5 W/kg are shown as follows.

P01 WLAN2.4G_802.11b_Left Side_0mm_Ch1_Sample A2_Ant0+1_Battery 1 _Holster2_Gun_w

DUT: 190111C07

Communication System: WLAN_2.4G; Frequency: 2412 MHz;Duty Cycle: 1:1.01
Medium: B19T27N2_0223 Medium parameters used: f = 2412 MHz; σ = 1.973 S/m; ε_r = 51.663; ρ = 1000 kg/m^3
Ambient Temperature：23.6 ℃ ; Liquid Temperature：23.4 ℃

DASY5 Configuration:
- Probe: EX3DV4 - SN7472; ConvF(7.84, 7.84, 7.84); Calibrated: 2018/08/29
- Sensor-Surface: 1.4mm (Mechanical Surface Detection)
- Electronics: DAE4 Sn1431; Calibrated: 2018/03/16
- Phantom: ELI Phantom_1204; Type: QDOVA002AA;
- Measurement SW: DASY52, Version 52.10 (2); SEMCAD X Version 14.6.12 (7450)

- Area Scan (101x221x1): Interpolated grid: dx=1.200 mm, dy=1.200 mm
Maximum value of SAR (interpolated) = 0.688 W/kg

- Zoom Scan (5x5x7)/Cube 0: Measurement grid: dx=8mm, dy=8mm, dz=5mm
Reference Value = 18.42 V/m; Power Drift = -0.11 dB
Peak SAR (extrapolated) = 0.914 W/kg
SAR(1 g) = 0.461 W/kg; SAR(10 g) = 0.216 W/kg
Maximum value of SAR (measured) = 0.682 W/kg

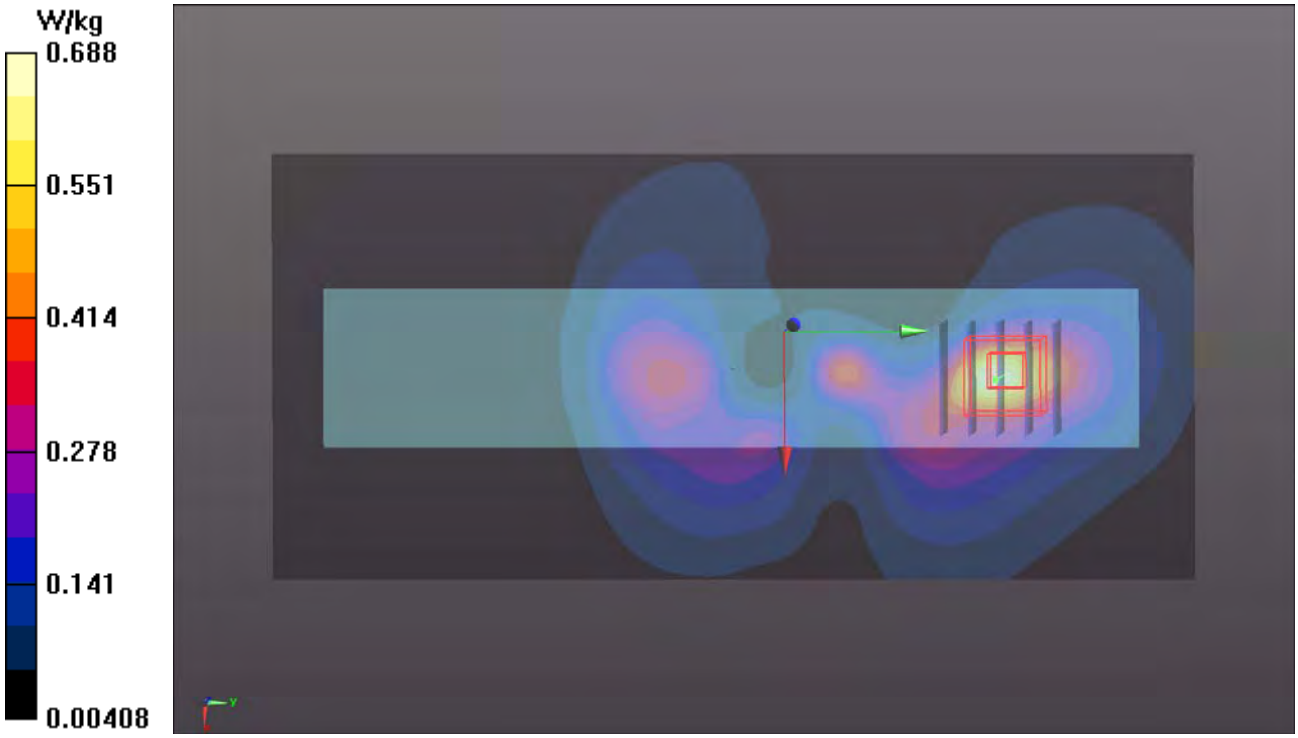

P02 WLAN5.2G_802.11ac VHT40_Left Side_0mm_Ch46_Sample A2_Ant0+1_Battery 1_Holster2_Gun_w

DUT: 190111C07

Communication System: WLAN_5G; Frequency: 5230 MHz;Duty Cycle: 1:1.28
Medium: B34T60N1_0226 Medium parameters used: f = 5230 MHz; σ = 5.527 S/m; ε_r = 47.109; ρ = 1000 kg/m^3
Ambient Temperature：23.8 ℃ ; Liquid Temperature：23.5 ℃

DASY5 Configuration:
- Probe: EX3DV4 - SN3898; ConvF(4.95, 4.95, 4.95); Calibrated: 2018/6/26
- Sensor-Surface: 1.4mm (Mechanical Surface Detection)
- Electronics: DAE4 Sn1277; Calibrated: 2019/1/24
- Phantom: ELI Phantom_1245; Type: QDOVA002AA;
- Measurement SW: DASY52, Version 52.10 (2); SEMCAD X Version 14.6.12 (7450)

- Area Scan (121x261x1): Interpolated grid: dx=1.000 mm, dy=1.000 mm
Maximum value of SAR (interpolated) = 0.208 W/kg

- Zoom Scan (6x6x12)/Cube 0: Measurement grid: dx=5mm, dy=5mm, dz=2mm
Reference Value = 7.078 V/m; Power Drift = 0.02 dB
Peak SAR (extrapolated) = 0.443 W/kg
SAR(1 g) = 0.132 W/kg; SAR(10 g) = 0.050 W/kg
Maximum value of SAR (measured) = 0.301 W/kg

- Zoom Scan (6x6x12)/Cube 1: Measurement grid: dx=5mm, dy=5mm, dz=2mm
Reference Value = 7.078 V/m; Power Drift = 0.02 dB
Peak SAR (extrapolated) = 0.300 W/kg
SAR(1 g) = 0.087 W/kg; SAR(10 g) = 0.035 W/kg
Maximum value of SAR (measured) = 0.181 W/kg

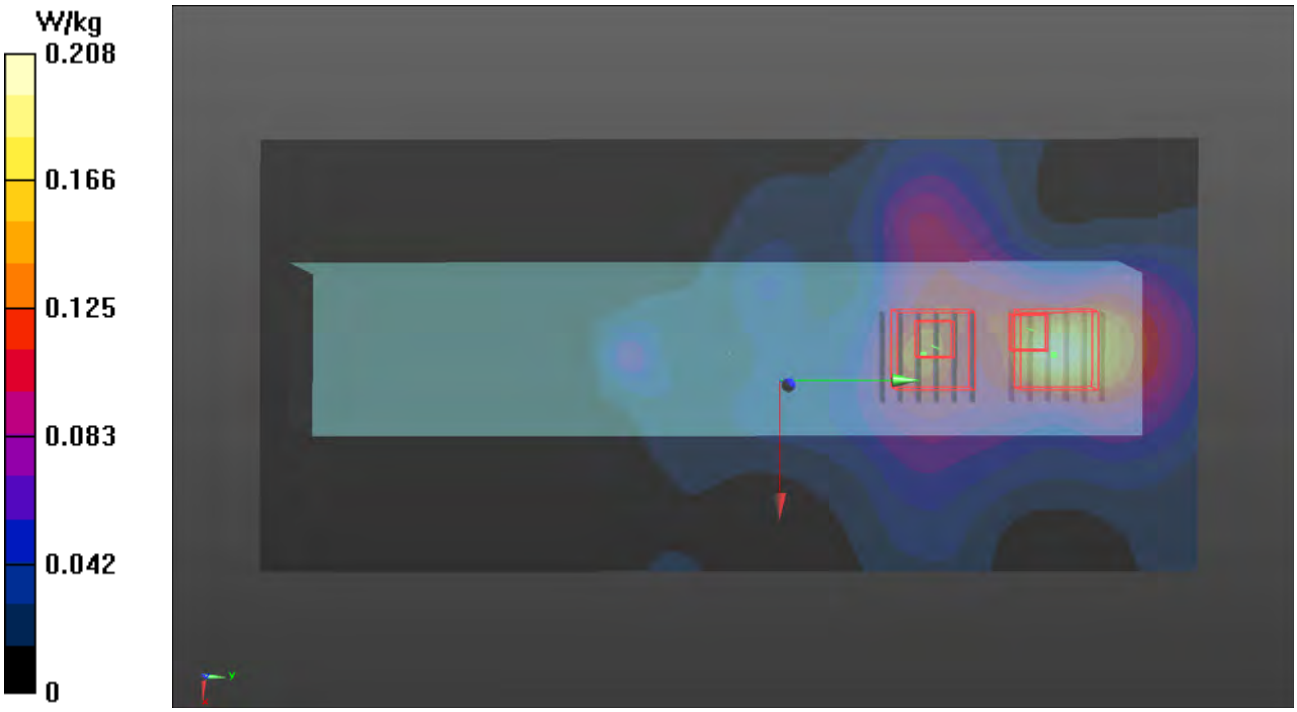

P04 WLAN5.6G_802.11ac VHT40_Left Side_0mm_Ch110_Sample A2_Ant0+1_Battery 1_Holster2_Gun_w

DUT: 190111C07

Communication System: WLAN_5G; Frequency: 5550 MHz;Duty Cycle: 1:1.28
Medium: B34T60N1_0226 Medium parameters used: f = 5550 MHz; σ = 5.948 S/m; ε_r = 46.53; ρ = 1000 kg/m^3
Ambient Temperature：23.8 ℃ ; Liquid Temperature：23.5 ℃

DASY5 Configuration:
- Probe: EX3DV4 - SN3898; ConvF(4.17, 4.17, 4.17); Calibrated: 2018/06/26
- Sensor-Surface: 1.4mm (Mechanical Surface Detection)
- Electronics: DAE4 Sn1277; Calibrated: 2019/01/24
- Phantom: ELI Phantom_1245; Type: QDOVA002AA;
- Measurement SW: DASY52, Version 52.10 (2); SEMCAD X Version 14.6.12 (7450)

- Area Scan (121x261x1): Interpolated grid: dx=1.000 mm, dy=1.000 mm
Maximum value of SAR (interpolated) = 0.756 W/kg

- Zoom Scan (6x6x12)/Cube 0: Measurement grid: dx=5mm, dy=5mm, dz=2mm
Reference Value = 12.71 V/m; Power Drift = -0.17 dB
Peak SAR (extrapolated) = 2.15 W/kg
SAR(1 g) = 0.568 W/kg; SAR(10 g) = 0.177 W/kg
Maximum value of SAR (measured) = 1.33 W/kg

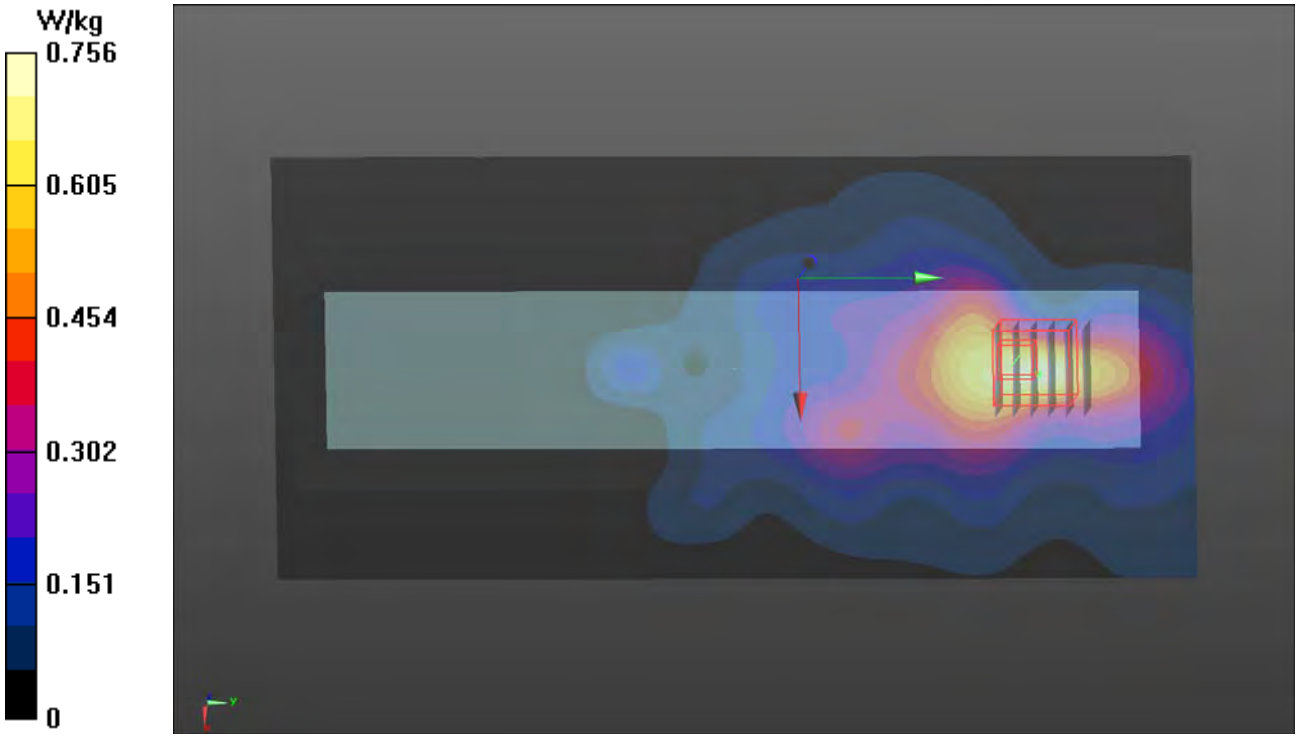

P05 WLAN5.8G_802.11ac VHT80_Left Side_0mm_Ch155_Sample A2_Ant0+1_Battery 1_Holster2_Gun_w

DUT: 190111C07

Communication System: WLAN_5G; Frequency: 5775 MHz;Duty Cycle: 1:1.56
Medium: B34T60N1_0304 Medium parameters used: f = 5775 MHz; σ = 5.808 S/m; ε_r = 46.366; ρ = 1000 kg/m^3
Ambient Temperature：23.7 ℃ ; Liquid Temperature：23.4 ℃

DASY5 Configuration:
- Probe: EX3DV4 - SN3971; ConvF(4.22, 4.22, 4.22); Calibrated: 2018/03/26
- Sensor-Surface: 1.4mm (Mechanical Surface Detection)
- Electronics: DAE4 Sn861; Calibrated: 2018/05/30
- Phantom: ELI Phantom_1039; Type: QDOVA001BB;
- Measurement SW: DASY52, Version 52.10 (2); SEMCAD X Version 14.6.12 (7450)

- Area Scan (121x261x1): Interpolated grid: dx=1.000 mm, dy=1.000 mm
Maximum value of SAR (interpolated) = 0.757 W/kg

- Zoom Scan (6x6x12)/Cube 0: Measurement grid: dx=5mm, dy=5mm, dz=2mm
Reference Value = 12.43 V/m; Power Drift = -0.09 dB
Peak SAR (extrapolated) = 2.34 W/kg
SAR(1 g) = 0.564 W/kg; SAR(10 g) = 0.156 W/kg
Maximum value of SAR (measured) = 1.48 W/kg

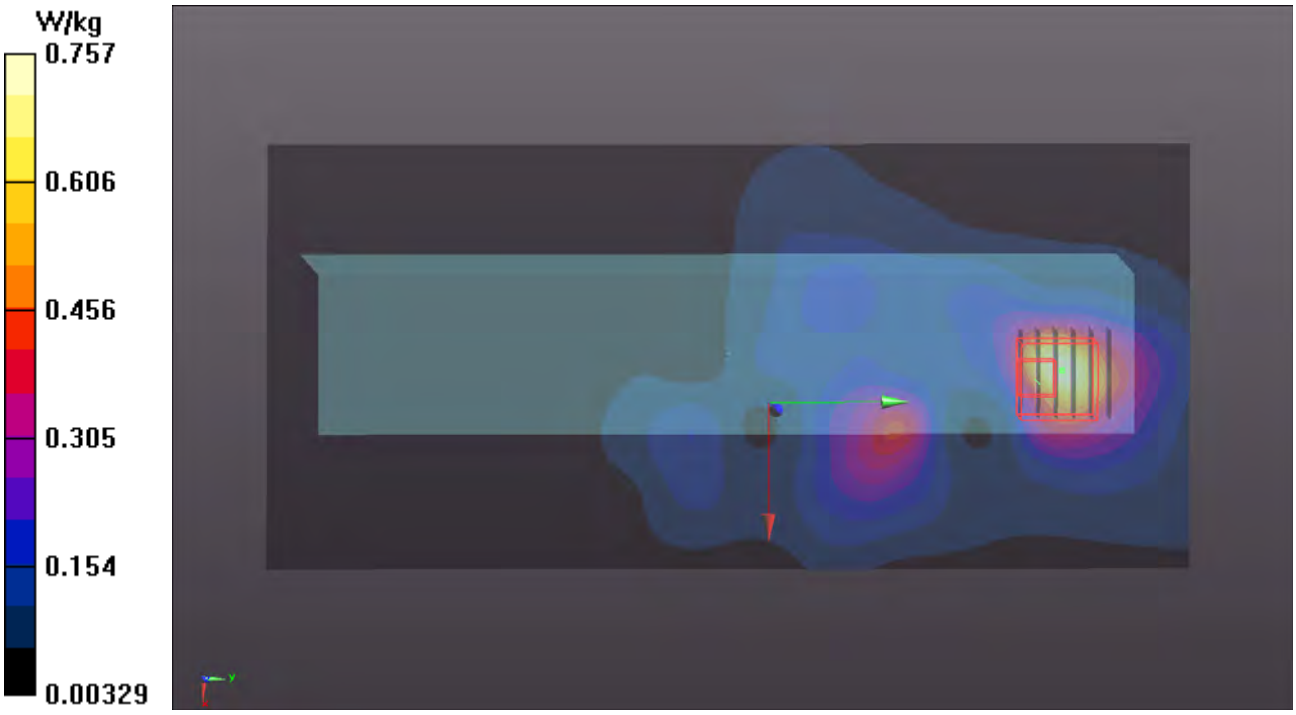

P06 BT_BDR_Left Side_0mm_Ch78_Sample A2_Ant0_Battery 1 _Holster2_Gun_w

DUT: 190111C07

Communication System: BT; Frequency: 2480 MHz;Duty Cycle: 1:1.32
Medium: B19T27N2_0223 Medium parameters used: f = 2480 MHz; σ = 2.049 S/m; ε_r = 51.48; ρ = 1000 kg/m^3
Ambient Temperature：23.6 ℃ ; Liquid Temperature：23.4 ℃

DASY5 Configuration:
- Probe: EX3DV4 - SN7472; ConvF(7.84, 7.84, 7.84); Calibrated: 2018/08/29
- Sensor-Surface: 1.4mm (Mechanical Surface Detection)
- Electronics: DAE4 Sn1431; Calibrated: 2018/03/16
- Phantom: ELI Phantom_1204; Type: QDOVA002AA;
- Measurement SW: DASY52, Version 52.10 (2); SEMCAD X Version 14.6.12 (7450)

- Area Scan (101x221x1): Interpolated grid: dx=1.200 mm, dy=1.200 mm
Maximum value of SAR (interpolated) = 0.0223 W/kg

- Zoom Scan (5x5x7)/Cube 0: Measurement grid: dx=8mm, dy=8mm, dz=5mm
Reference Value = 1.927 V/m; Power Drift = -0.17 dB
Peak SAR (extrapolated) = 0.0110 W/kg
SAR(1 g) = 0.00455 W/kg; SAR(10 g) = 0.00202 W/kg
Maximum value of SAR (measured) = 0.00857 W/kg

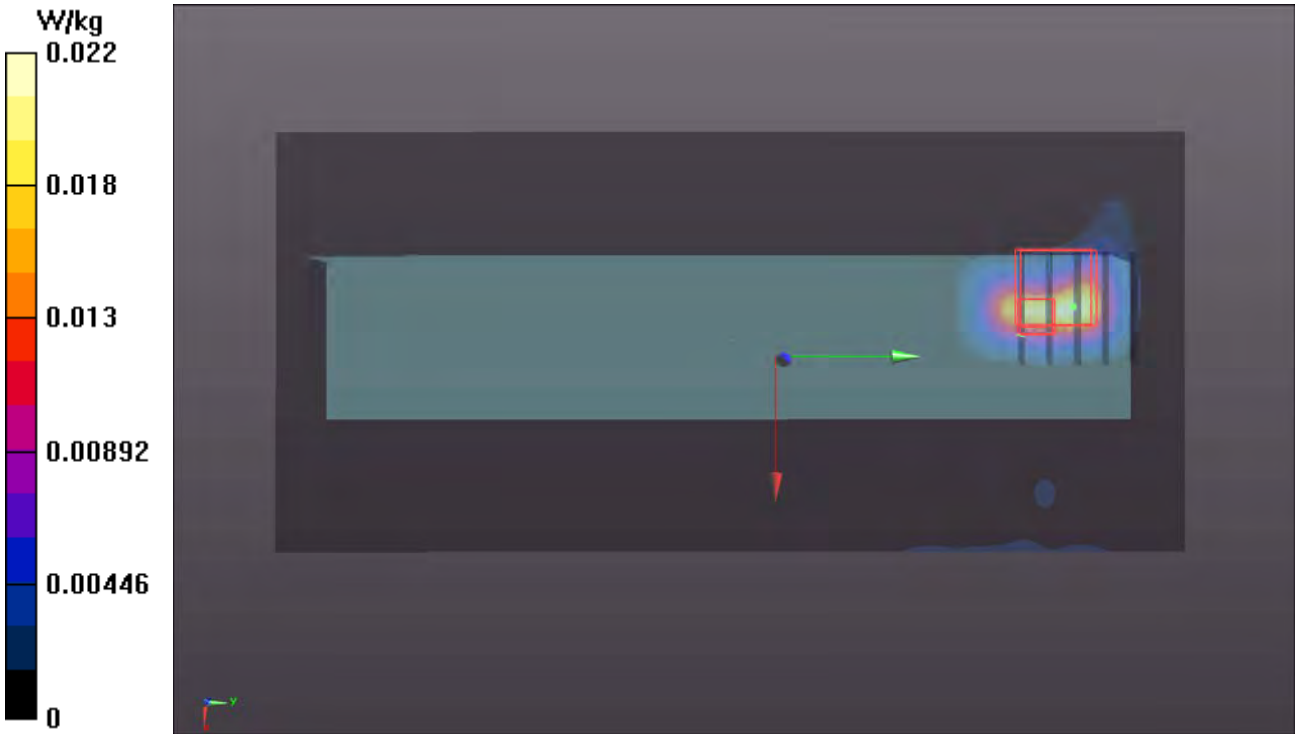

Appendix C. Calibration Certificate for Probe and Dipole

The SPEAG calibration certificates are shown as follows.

Calibration Laboratory of
Schmid & Partner
Engineering AG
Zeughausstrasse 43, 8004 Zurich, Switzerland

S Schweizerischer Kalibrierdienst
C Service suisse d'étalonnage
Servizio svizzero di taratura
S Swiss Calibration Service

Accredited by the Swiss Accreditation Service (SAS)
The Swiss Accreditation Service is one of the signatories to the EA Multilateral Agreement for the recognition of calibration certificates

Accreditation No.: SCS 0108

Client **B.V. ADT (Auden)**

Certificate No: D2450V2-737_Aug18

CALIBRATION CERTIFICATE

Object	D2450V2 - SN:737
Calibration procedure(s)	QA CAL-05.v10 Calibration procedure for dipole validation kits above 700 MHz
Calibration date:	August 24, 2018

This calibration certificate documents the traceability to national standards, which realize the physical units of measurements (SI).
The measurements and the uncertainties with confidence probability are given on the following pages and are part of the certificate.

All calibrations have been conducted in the closed laboratory facility: environment temperature (22 ± 3)°C and humidity < 70%.

Calibration Equipment used (M&TE critical for calibration)

Primary Standards	ID #	Cal Date (Certificate No.)	Scheduled Calibration
Power meter NRP	SN: 104778	04-Apr-18 (No. 217-02672/02673)	Apr-19
Power sensor NRP-Z91	SN: 103244	04-Apr-18 (No. 217-02672)	Apr-19
Power sensor NRP-Z91	SN: 103245	04-Apr-18 (No. 217-02673)	Apr-19
Reference 20 dB Attenuator	SN: 5058 (20k)	04-Apr-18 (No. 217-02682)	Apr-19
Type-N mismatch combination	SN: 5047.2 / 06327	04-Apr-18 (No. 217-02683)	Apr-19
Reference Probe EX3DV4	SN: 7349	30-Dec-17 (No. EX3-7349_Dec17)	Dec-18
DAE4	SN: 601	26-Oct-17 (No. DAE4-601_Oct17)	Oct-18

Secondary Standards	ID #	Check Date (in house)	Scheduled Check
Power meter EPM-442A	SN: GB37480704	07-Oct-15 (in house check Oct-16)	In house check: Oct-18
Power sensor HP 8481A	SN: US37292783	07-Oct-15 (in house check Oct-16)	In house check: Oct-18
Power sensor HP 8481A	SN: MY41092317	07-Oct-15 (in house check Oct-16)	In house check: Oct-18
RF generator R&S SMT-06	SN: 100972	15-Jun-15 (in house check Oct-16)	In house check: Oct-18
Network Analyzer Agilent E8358A	SN: US41080477	31-Mar-14 (in house check Oct-17)	In house check: Oct-18

	Name	Function	Signature
Calibrated by:	Manu Seitz	Laboratory Technician	
Approved by:	Katja Pokovic	Technical Manager	

Issued: August 24, 2018

This calibration certificate shall not be reproduced except in full without written approval of the laboratory.

Glossary:

TSL	tissue simulating liquid
ConvF	sensitivity in TSL / NORM x,y,z
N/A	not applicable or not measured

Calibration is Performed According to the Following Standards:

a) IEEE Std 1528-2013, "IEEE Recommended Practice for Determining the Peak Spatial-Averaged Specific Absorption Rate (SAR) in the Human Head from Wireless Communications Devices: Measurement Techniques", June 2013
b) IEC 62209-1, "Measurement procedure for the assessment of Specific Absorption Rate (SAR) from hand-held and body-mounted devices used next to the ear (frequency range of 300 MHz to 6 GHz)", July 2016
c) IEC 62209-2, "Procedure to determine the Specific Absorption Rate (SAR) for wireless communication devices used in close proximity to the human body (frequency range of 30 MHz to 6 GHz)", March 2010
d) KDB 865664, "SAR Measurement Requirements for 100 MHz to 6 GHz"

Additional Documentation:

e) DASY4/5 System Handbook

Methods Applied and Interpretation of Parameters:

- *Measurement Conditions:* Further details are available from the Validation Report at the end of the certificate. All figures stated in the certificate are valid at the frequency indicated.
- *Antenna Parameters with TSL:* The dipole is mounted with the spacer to position its feed point exactly below the center marking of the flat phantom section, with the arms oriented parallel to the body axis.
- *Feed Point Impedance and Return Loss:* These parameters are measured with the dipole positioned under the liquid filled phantom. The impedance stated is transformed from the measurement at the SMA connector to the feed point. The Return Loss ensures low reflected power. No uncertainty required.
- *Electrical Delay:* One-way delay between the SMA connector and the antenna feed point. No uncertainty required.
- *SAR measured:* SAR measured at the stated antenna input power.
- *SAR normalized:* SAR as measured, normalized to an input power of 1 W at the antenna connector.
- *SAR for nominal TSL parameters:* The measured TSL parameters are used to calculate the nominal SAR result.

The reported uncertainty of measurement is stated as the standard uncertainty of measurement multiplied by the coverage factor k=2, which for a normal distribution corresponds to a coverage probability of approximately 95%.

Measurement Conditions

DASY system configuration, as far as not given on page 1.

DASY Version	DASY5	V52.10.1
Extrapolation	Advanced Extrapolation	
Phantom	Modular Flat Phantom	
Distance Dipole Center - TSL	10 mm	with Spacer
Zoom Scan Resolution	dx, dy, dz = 5 mm	
Frequency	2450 MHz ± 1 MHz	

Head TSL parameters

The following parameters and calculations were applied.

	Temperature	**Permittivity**	**Conductivity**
Nominal Head TSL parameters	22.0 °C	39.2	1.80 mho/m
Measured Head TSL parameters	(22.0 ± 0.2) °C	37.7 ± 6 %	1.86 mho/m ± 6 %
Head TSL temperature change during test	< 0.5 °C	----	----

SAR result with Head TSL

SAR averaged over 1 cm³ (1 g) of Head TSL	Condition	
SAR measured	250 mW input power	13.2 W/kg
SAR for nominal Head TSL parameters	normalized to 1W	**51.5 W/kg ± 17.0 % (k=2)**

SAR averaged over 10 cm³ (10 g) of Head TSL	condition	
SAR measured	250 mW input power	6.13 W/kg
SAR for nominal Head TSL parameters	normalized to 1W	**24.2 W/kg ± 16.5 % (k=2)**

Body TSL parameters

The following parameters and calculations were applied.

	Temperature	**Permittivity**	**Conductivity**
Nominal Body TSL parameters	22.0 °C	52.7	1.95 mho/m
Measured Body TSL parameters	(22.0 ± 0.2) °C	51.8 ± 6 %	2.02 mho/m ± 6 %
Body TSL temperature change during test	< 0.5 °C	----	----

SAR result with Body TSL

SAR averaged over 1 cm³ (1 g) of Body TSL	Condition	
SAR measured	250 mW input power	12.9 W/kg
SAR for nominal Body TSL parameters	normalized to 1W	**50.5 W/kg ± 17.0 % (k=2)**

SAR averaged over 10 cm³ (10 g) of Body TSL	condition	
SAR measured	250 mW input power	6.01 W/kg
SAR for nominal Body TSL parameters	normalized to 1W	**23.8 W/kg ± 16.5 % (k=2)**

Appendix (Additional assessments outside the scope of SCS 0108)

Antenna Parameters with Head TSL

Impedance, transformed to feed point	55.6 Ω + 4.1 jΩ
Return Loss	- 23.7 dB

Antenna Parameters with Body TSL

Impedance, transformed to feed point	49.4 Ω + 7.3 jΩ
Return Loss	- 22.7 dB

General Antenna Parameters and Design

Electrical Delay (one direction)	1.162 ns

After long term use with 100W radiated power, only a slight warming of the dipole near the feedpoint can be measured.

The dipole is made of standard semirigid coaxial cable. The center conductor of the feeding line is directly connected to the second arm of the dipole. The antenna is therefore short-circuited for DC-signals. On some of the dipoles, small end caps are added to the dipole arms in order to improve matching when loaded according to the position as explained in the "Measurement Conditions" paragraph. The SAR data are not affected by this change. The overall dipole length is still according to the Standard.
No excessive force must be applied to the dipole arms, because they might bend or the soldered connections near the feedpoint may be damaged.

Additional EUT Data

Manufactured by	SPEAG
Manufactured on	August 26, 2003

DASY5 Validation Report for Head TSL

Date: 23.08.2018

Test Laboratory: SPEAG, Zurich, Switzerland

DUT: Dipole 2450 MHz; Type: D2450V2; Serial: D2450V2 - SN:737

Communication System: UID 0 - CW; Frequency: 2450 MHz
Medium parameters used: f = 2450 MHz; σ = 1.86 S/m; ε_r = 37.7; ρ = 1000 kg/m^3
Phantom section: Flat Section
Measurement Standard: DASY5 (IEEE/IEC/ANSI C63.19-2011)

DASY52 Configuration:

- Probe: EX3DV4 - SN7349; ConvF(7.88, 7.88, 7.88) @ 2450 MHz; Calibrated: 30.12.2017
- Sensor-Surface: 1.4mm (Mechanical Surface Detection)
- Electronics: DAE4 Sn601; Calibrated: 26.10.2017
- Phantom: Flat Phantom 5.0 (front); Type: QD 000 P50 AA; Serial: 1001
- DASY52 52.10.1(1476); SEMCAD X 14.6.11(7439)

Dipole Calibration for Head Tissue/Pin=250 mW, d=10mm/Zoom Scan (7x7x7)/Cube 0:

Measurement grid: dx=5mm, dy=5mm, dz=5mm
Reference Value = 115.2 V/m; Power Drift = -0.05 dB
Peak SAR (extrapolated) = 26.1 W/kg
SAR(1 g) = 13.2 W/kg; SAR(10 g) = 6.13 W/kg
Maximum value of SAR (measured) = 21.7 W/kg

0 dB = 21.7 W/kg = 13.36 dBW/kg

Impedance Measurement Plot for Head TSL

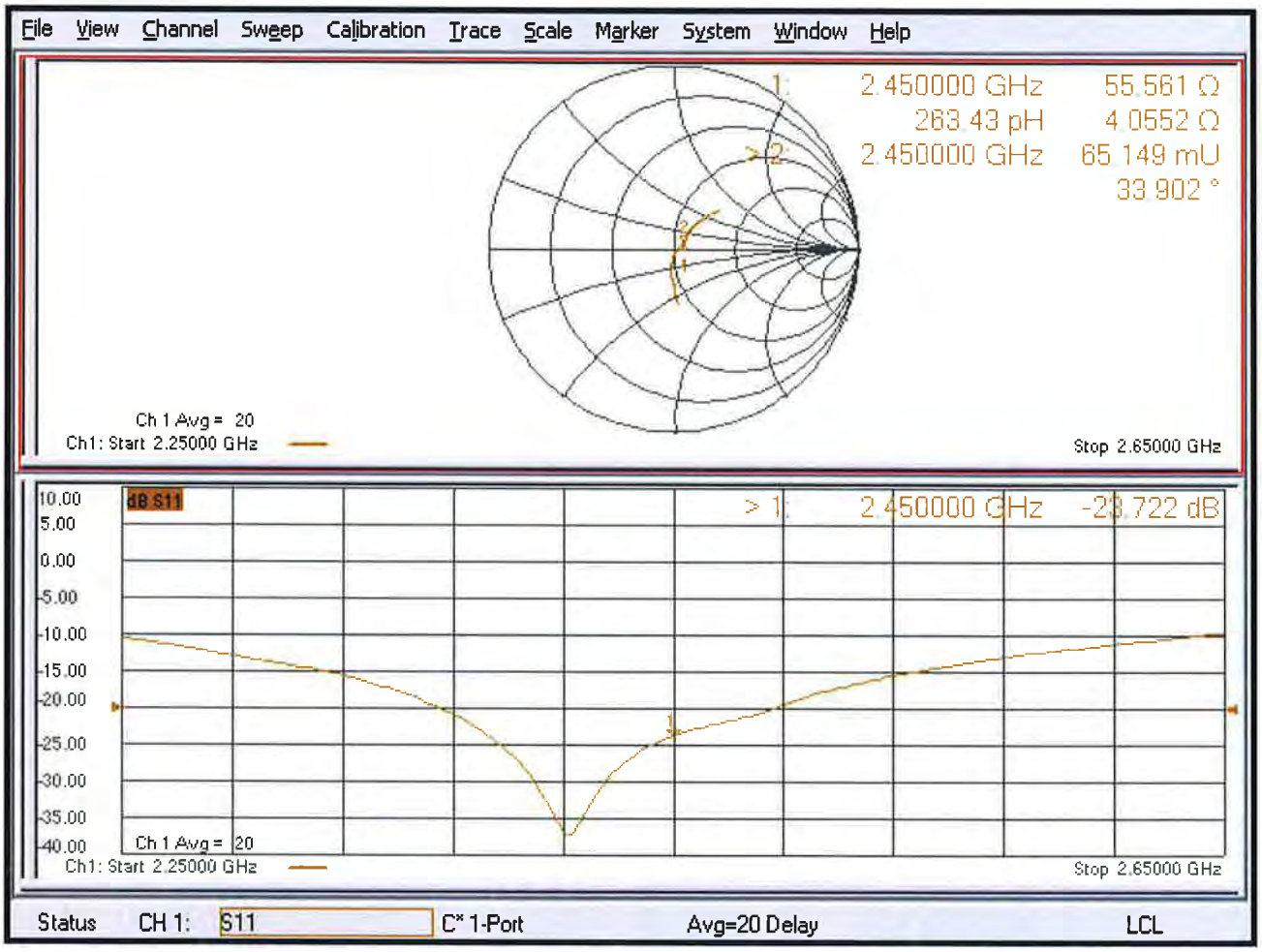

DASY5 Validation Report for Body TSL

Date: 24.08.2018

Test Laboratory: SPEAG, Zurich, Switzerland

DUT: Dipole 2450 MHz; Type: D2450V2; Serial: D2450V2 - SN:737

Communication System: UID 0 - CW; Frequency: 2450 MHz
Medium parameters used: f = 2450 MHz; σ = 2.02 S/m; ε_r = 51.8; ρ = 1000 kg/m^3
Phantom section: Flat Section
Measurement Standard: DASY5 (IEEE/IEC/ANSI C63.19-2011)

DASY52 Configuration:

- Probe: EX3DV4 - SN7349; ConvF(8.01, 8.01, 8.01) @ 2450 MHz; Calibrated: 30.12.2017
- Sensor-Surface: 1.4mm (Mechanical Surface Detection)
- Electronics: DAE4 Sn601; Calibrated: 26.10.2017
- Phantom: Flat Phantom 5.0 (back); Type: QD 000 P50 AA; Serial: 1002
- DASY52 52.10.1(1476); SEMCAD X 14.6.11(7439)

Dipole Calibration for Body Tissue/Pin=250 mW, d=10mm/Zoom Scan (7x7x7)/Cube 0:

Measurement grid: dx=5mm, dy=5mm, dz=5mm
Reference Value = 107.8 V/m; Power Drift = -0.01 dB
Peak SAR (extrapolated) = 25.5 W/kg
SAR(1 g) = 12.9 W/kg; SAR(10 g) = 6.01 W/kg
Maximum value of SAR (measured) = 20.9 W/kg

0 dB = 20.9 W/kg = 13.20 dBW/kg

Impedance Measurement Plot for Body TSL

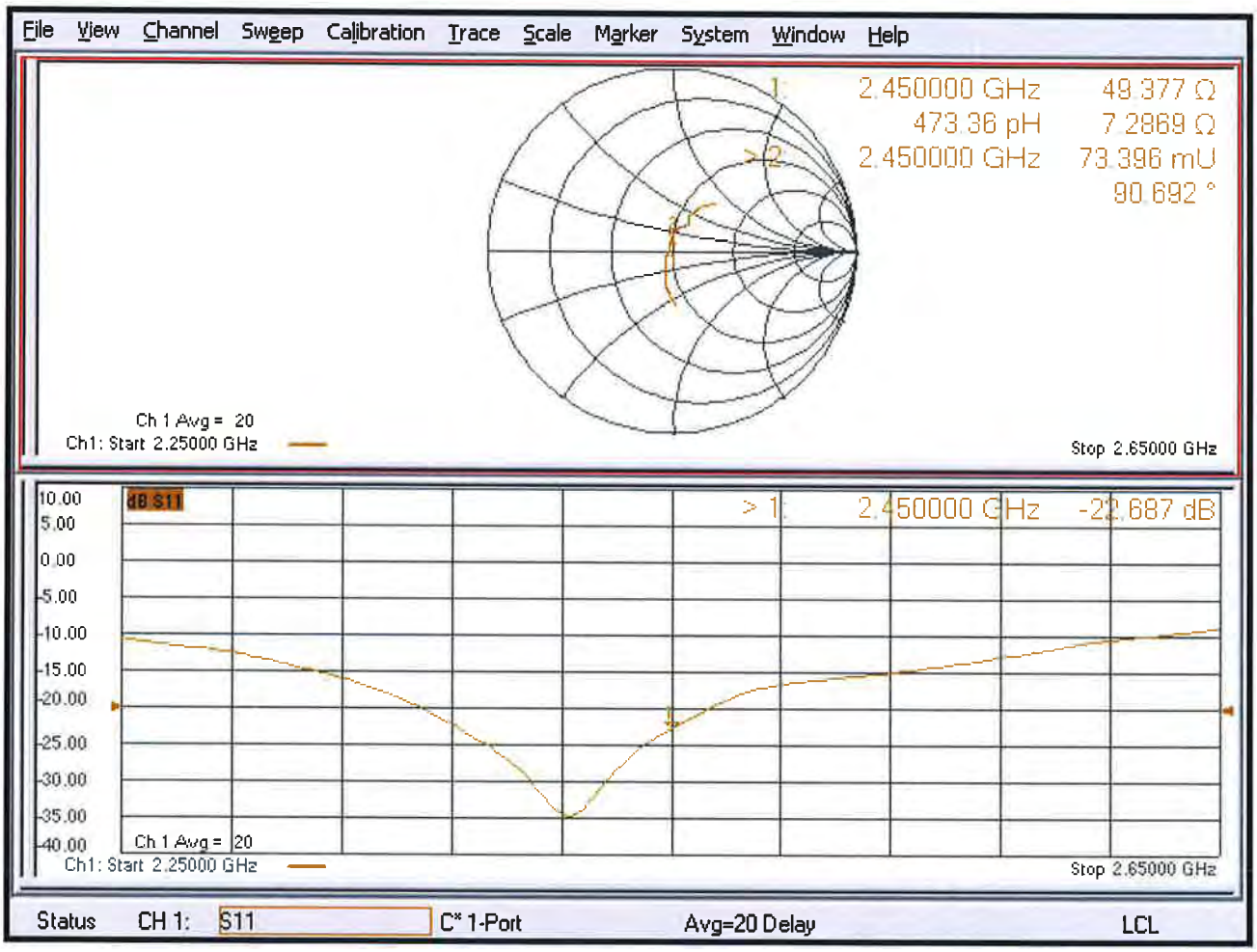

Calibration Laboratory of
Schmid & Partner
Engineering AG
Zeughausstrasse 43, 8004 Zurich, Switzerland

S Schweizerischer Kalibrierdienst
C Service suisse d'étalonnage
Servizio svizzero di taratura
S Swiss Calibration Service

Accredited by the Swiss Accreditation Service (SAS)
The Swiss Accreditation Service is one of the signatories to the EA Multilateral Agreement for the recognition of calibration certificates

Accreditation No.: SCS 0108

Client **BV ADT Korea (Auden)**

Certificate No: D5GHzV2-1019_Mar18

CALIBRATION CERTIFICATE

Object	D5GHzV2 - SN:1019
Calibration procedure(s)	QA CAL-22.v3 Calibration procedure for dipole validation kits between 3-6 GHz
Calibration date:	March 22, 2018

This calibration certificate documents the traceability to national standards, which realize the physical units of measurements (SI).
The measurements and the uncertainties with confidence probability are given on the following pages and are part of the certificate.

All calibrations have been conducted in the closed laboratory facility: environment temperature (22 ± 3)°C and humidity < 70%.

Calibration Equipment used (M&TE critical for calibration)

Primary Standards	ID #	Cal Date (Certificate No.)	Scheduled Calibration
Power meter NRP	SN: 104778	04-Apr-17 (No. 217-02521/02522)	Apr-18
Power sensor NRP-Z91	SN: 103244	04-Apr-17 (No. 217-02521)	Apr-18
Power sensor NRP-Z91	SN: 103245	04-Apr-17 (No. 217-02522)	Apr-18
Reference 20 dB Attenuator	SN: 5058 (20k)	07-Apr-17 (No. 217-02528)	Apr-18
Type-N mismatch combination	SN: 5047.2 / 06327	07-Apr-17 (No. 217-02529)	Apr-18
Reference Probe EX3DV4	SN: 3503	30-Dec-17 (No. EX3-3503_Dec17)	Dec-18
DAE4	SN: 601	26-Oct-17 (No. DAE4-601_Oct17)	Oct-18

Secondary Standards	ID #	Check Date (in house)	Scheduled Check
Power meter EPM-442A	SN: GB37480704	07-Oct-15 (in house check Oct-16)	In house check: Oct-18
Power sensor HP 8481A	SN: US37292783	07-Oct-15 (in house check Oct-16)	In house check: Oct-18
Power sensor HP 8481A	SN: MY41092317	07-Oct-15 (in house check Oct-16)	In house check: Oct-18
RF generator R&S SMT-06	SN: 100972	15-Jun-15 (in house check Oct-16)	In house check: Oct-18
Network Analyzer HP 8753E	SN: US37390585	18-Oct-01 (in house check Oct-17)	In house check: Oct-18

	Name	Function	Signature
Calibrated by:	Jeton Kastrati	Laboratory Technician	
Approved by:	Katja Pokovic	Technical Manager	

Issued: March 26, 2018

This calibration certificate shall not be reproduced except in full without written approval of the laboratory.

Glossary:

TSL	tissue simulating liquid
ConvF	sensitivity in TSL / NORM x,y,z
N/A	not applicable or not measured

Calibration is Performed According to the Following Standards:

a) IEEE Std 1528-2013, "IEEE Recommended Practice for Determining the Peak Spatial-Averaged Specific Absorption Rate (SAR) in the Human Head from Wireless Communications Devices: Measurement Techniques", June 2013
b) IEC 62209-1, "Measurement procedure for the assessment of Specific Absorption Rate (SAR) from hand-held and body-mounted devices used next to the ear (frequency range of 300 MHz to 6 GHz)", July 2016
c) IEC 62209-2, "Procedure to determine the Specific Absorption Rate (SAR) for wireless communication devices used in close proximity to the human body (frequency range of 30 MHz to 6 GHz)", March 2010
d) KDB 865664, "SAR Measurement Requirements for 100 MHz to 6 GHz"

Additional Documentation:

e) DASY4/5 System Handbook

Methods Applied and Interpretation of Parameters:

- *Measurement Conditions:* Further details are available from the Validation Report at the end of the certificate. All figures stated in the certificate are valid at the frequency indicated.
- *Antenna Parameters with TSL:* The dipole is mounted with the spacer to position its feed point exactly below the center marking of the flat phantom section, with the arms oriented parallel to the body axis.
- *Feed Point Impedance and Return Loss:* These parameters are measured with the dipole positioned under the liquid filled phantom. The impedance stated is transformed from the measurement at the SMA connector to the feed point. The Return Loss ensures low reflected power. No uncertainty required.
- *Electrical Delay:* One-way delay between the SMA connector and the antenna feed point. No uncertainty required.
- *SAR measured:* SAR measured at the stated antenna input power.
- *SAR normalized:* SAR as measured, normalized to an input power of 1 W at the antenna connector.
- *SAR for nominal TSL parameters:* The measured TSL parameters are used to calculate the nominal SAR result.

The reported uncertainty of measurement is stated as the standard uncertainty of measurement multiplied by the coverage factor k=2, which for a normal distribution corresponds to a coverage probability of approximately 95%.

Measurement Conditions

DASY system configuration, as far as not given on page 1.

DASY Version	DASY5	V52.10.0
Extrapolation	Advanced Extrapolation	
Phantom	Modular Flat Phantom V5.0	
Distance Dipole Center - TSL	10 mm	with Spacer
Zoom Scan Resolution	dx, dy = 4.0 mm, dz = 1.4 mm	Graded Ratio = 1.4 (Z direction)
Frequency	5250 MHz ± 1 MHz 5600 MHz ± 1 MHz 5750 MHz ± 1 MHz 5800 MHz ± 1 MHz	

Head TSL parameters at 5250 MHz

The following parameters and calculations were applied.

	Temperature	**Permittivity**	**Conductivity**
Nominal Head TSL parameters	22.0 °C	35.9	4.71 mho/m
Measured Head TSL parameters	(22.0 ± 0.2) °C	36.2 ± 6 %	4.58 mho/m ± 6 %
Head TSL temperature change during test	< 0.5 °C	----	----

SAR result with Head TSL at 5250 MHz

SAR averaged over 1 cm^3 (1 g) of Head TSL	Condition	
SAR measured	100 mW input power	7.85 W/kg
SAR for nominal Head TSL parameters	normalized to 1W	**78.6 W/kg ± 19.9 % (k=2)**

SAR averaged over 10 cm^3 (10 g) of Head TSL	condition	
SAR measured	100 mW input power	2.28 W/kg
SAR for nominal Head TSL parameters	normalized to 1W	**22.8 W/kg ± 19.5 % (k=2)**

Head TSL parameters at 5600 MHz

The following parameters and calculations were applied.

	Temperature	Permittivity	Conductivity
Nominal Head TSL parameters	22.0 °C	35.5	5.07 mho/m
Measured Head TSL parameters	(22.0 ± 0.2) °C	35.7 ± 6 %	4.94 mho/m ± 6 %
Head TSL temperature change during test	< 0.5 °C	----	----

SAR result with Head TSL at 5600 MHz

SAR averaged over 1 cm^3 (1 g) of Head TSL	Condition	
SAR measured	100 mW input power	8.49 W/kg
SAR for nominal Head TSL parameters	normalized to 1W	**84.9 W / kg ± 19.9 % (k=2)**

SAR averaged over 10 cm^3 (10 g) of Head TSL	condition	
SAR measured	100 mW input power	2.43 W/kg
SAR for nominal Head TSL parameters	normalized to 1W	**24.3 W/kg ± 19.5 % (k=2)**

Head TSL parameters at 5750 MHz

The following parameters and calculations were applied.

	Temperature	Permittivity	Conductivity
Nominal Head TSL parameters	22.0 °C	35.4	5.22 mho/m
Measured Head TSL parameters	(22.0 ± 0.2) °C	35.5 ± 6 %	5.10 mho/m ± 6 %
Head TSL temperature change during test	< 0.5 °C	----	----

SAR result with Head TSL at 5750 MHz

SAR averaged over 1 cm^3 (1 g) of Head TSL	Condition	
SAR measured	100 mW input power	7.94 W/kg
SAR for nominal Head TSL parameters	normalized to 1W	**79.4 W/kg ± 19.9 % (k=2)**

SAR averaged over 10 cm^3 (10 g) of Head TSL	condition	
SAR measured	100 mW input power	2.27 W/kg
SAR for nominal Head TSL parameters	normalized to 1W	**22.7 W/kg ± 19.5 % (k=2)**

Head TSL parameters at 5800 MHz

The following parameters and calculations were applied.

	Temperature	Permittivity	Conductivity
Nominal Head TSL parameters	22.0 °C	35.3	5.27 mho/m
Measured Head TSL parameters	(22.0 ± 0.2) °C	35.4 ± 6 %	5.16 mho/m ± 6 %
Head TSL temperature change during test	< 0.5 °C	----	----

SAR result with Head TSL at 5800 MHz

SAR averaged over 1 cm^3 (1 g) of Head TSL	Condition	
SAR measured	100 mW input power	8.09 W/kg
SAR for nominal Head TSL parameters	normalized to 1W	**80.9 W/kg ± 19.9 % (k=2)**

SAR averaged over 10 cm^3 (10 g) of Head TSL	condition	
SAR measured	100 mW input power	2.30 W/kg
SAR for nominal Head TSL parameters	normalized to 1W	**23.0 W/kg ± 19.5 % (k=2)**

Body TSL parameters at 5250 MHz

The following parameters and calculations were applied.

	Temperature	Permittivity	Conductivity
Nominal Body TSL parameters	22.0 °C	48.9	5.36 mho/m
Measured Body TSL parameters	(22.0 ± 0.2) °C	47.1 ± 6 %	5.49 mho/m ± 6 %
Body TSL temperature change during test	< 0.5 °C	----	----

SAR result with Body TSL at 5250 MHz

SAR averaged over 1 cm^3 (1 g) of Body TSL	Condition	
SAR measured	100 mW input power	7.54 W/kg
SAR for nominal Body TSL parameters	normalized to 1W	**74.9 W/kg ± 19.9 % (k=2)**

SAR averaged over 10 cm^3 (10 g) of Body TSL	condition	
SAR measured	100 mW input power	2.10 W/kg
SAR for nominal Body TSL parameters	normalized to 1W	**20.8 W/kg ± 19.5 % (k=2)**

Body TSL parameters at 5600 MHz

The following parameters and calculations were applied.

	Temperature	Permittivity	Conductivity
Nominal Body TSL parameters	22.0 °C	48.5	5.77 mho/m
Measured Body TSL parameters	(22.0 ± 0.2) °C	46.4 ± 6 %	5.97 mho/m ± 6 %
Body TSL temperature change during test	< 0.5 °C	----	----

SAR result with Body TSL at 5600 MHz

SAR averaged over 1 cm^3 (1 g) of Body TSL	Condition	
SAR measured	100 mW input power	7.99 W/kg
SAR for nominal Body TSL parameters	normalized to 1W	**79.3 W/kg ± 19.9 % (k=2)**

SAR averaged over 10 cm^3 (10 g) of Body TSL	condition	
SAR measured	100 mW input power	2.24 W/kg
SAR for nominal Body TSL parameters	normalized to 1W	**22.2 W/kg ± 19.5 % (k=2)**

Body TSL parameters at 5750 MHz

The following parameters and calculations were applied.

	Temperature	Permittivity	Conductivity
Nominal Body TSL parameters	22.0 °C	48.3	5.94 mho/m
Measured Body TSL parameters	(22.0 ± 0.2) °C	46.2 ± 6 %	6.18 mho/m ± 6 %
Body TSL temperature change during test	< 0.5 °C	----	----

SAR result with Body TSL at 5750 MHz

SAR averaged over 1 cm^3 (1 g) of Body TSL	Condition	
SAR measured	100 mW input power	7.50 W/kg
SAR for nominal Body TSL parameters	normalized to 1W	**74.5 W/kg ± 19.9 % (k=2)**

SAR averaged over 10 cm^3 (10 g) of Body TSL	condition	
SAR measured	100 mW input power	2.10 W/kg
SAR for nominal Body TSL parameters	normalized to 1W	**20.8 W/kg ± 19.5 % (k=2)**

Body TSL parameters at 5800 MHz

The following parameters and calculations were applied.

	Temperature	Permittivity	Conductivity
Nominal Body TSL parameters	22.0 °C	48.2	6.00 mho/m
Measured Body TSL parameters	(22.0 ± 0.2) °C	46.1 ± 6 %	6.25 mho/m ± 6 %
Body TSL temperature change during test	< 0.5 °C	----	----

SAR result with Body TSL at 5800 MHz

SAR averaged over 1 cm^3 (1 g) of Body TSL	Condition	
SAR measured	100 mW input power	7.58 W/kg
SAR for nominal Body TSL parameters	normalized to 1W	**75.2 W/kg ± 19.9 % (k=2)**

SAR averaged over 10 cm^3 (10 g) of Body TSL	condition	
SAR measured	100 mW input power	2.11 W/kg
SAR for nominal Body TSL parameters	normalized to 1W	**20.9 W/kg ± 19.5 % (k=2)**

Appendix (Additional assessments outside the scope of SCS 0108)

Antenna Parameters with Head TSL at 5250 MHz

Impedance, transformed to feed point	54.8 Ω - 3.5 jΩ
Return Loss	- 24.9 dB

Antenna Parameters with Head TSL at 5600 MHz

Impedance, transformed to feed point	57.9 Ω + 0.9 jΩ
Return Loss	- 22.6 dB

Antenna Parameters with Head TSL at 5750 MHz

Impedance, transformed to feed point	56.2 Ω + 6.3 jΩ
Return Loss	- 21.6 dB

Antenna Parameters with Head TSL at 5800 MHz

Impedance, transformed to feed point	54.2 Ω + 4.6 jΩ
Return Loss	- 24.5 dB

Antenna Parameters with Body TSL at 5250 MHz

Impedance, transformed to feed point	54.8 Ω - 2.6 jΩ
Return Loss	- 25.6 dB

Antenna Parameters with Body TSL at 5600 MHz

Impedance, transformed to feed point	59.3 Ω + 0.7 jΩ
Return Loss	- 21.4 dB

Antenna Parameters with Body TSL at 5750 MHz

Impedance, transformed to feed point	58.5 Ω + 6.2 jΩ
Return Loss	- 20.3 dB

Antenna Parameters with Body TSL at 5800 MHz

Impedance, transformed to feed point	57.2 Ω + 4.4 jΩ
Return Loss	- 22.1 dB

General Antenna Parameters and Design

Electrical Delay (one direction)	1.206 ns

After long term use with 100W radiated power, only a slight warming of the dipole near the feedpoint can be measured.

The dipole is made of standard semirigid coaxial cable. The center conductor of the feeding line is directly connected to the second arm of the dipole. The antenna is therefore short-circuited for DC-signals. On some of the dipoles, small end caps are added to the dipole arms in order to improve matching when loaded according to the position as explained in the "Measurement Conditions" paragraph. The SAR data are not affected by this change. The overall dipole length is still according to the Standard.
No excessive force must be applied to the dipole arms, because they might bend or the soldered connections near the feedpoint may be damaged.

Additional EUT Data

Manufactured by	SPEAG
Manufactured on	February 05, 2004

DASY5 Validation Report for Head TSL

Date: 21.03.2018

Test Laboratory: SPEAG, Zurich, Switzerland

DUT: Dipole D5GHzV2; Type: D5GHzV2; Serial: D5GHzV2 - SN:1019

Communication System: UID 0 - CW; Frequency: 5250 MHz, Frequency: 5600 MHz, Frequency: 5750 MHz, Frequency: 5800 MHz
Medium parameters used: f = 5250 MHz; σ = 4.58 S/m; ε_r = 36.2; ρ = 1000 kg/m^3 ,
Medium parameters used: f = 5600 MHz; σ = 4.94 S/m; ε_r = 35.7; ρ = 1000 kg/m^3 ,
Medium parameters used: f = 5750 MHz; σ = 5.1 S/m; ε_r = 35.5; ρ = 1000 kg/m^3 ,
Medium parameters used: f = 5800 MHz; σ = 5.16 S/m; ε_r = 35.4; ρ = 1000 kg/m^3
Phantom section: Flat Section
Measurement Standard: DASY5 (IEEE/IEC/ANSI C63.19-2011)

DASY52 Configuration:

- Probe: EX3DV4 - SN3503; ConvF(5.51, 5.51, 5.51); Calibrated: 30.12.2017, ConvF(5.05, 5.05, 5.05); Calibrated: 30.12.2017, ConvF(4.98, 4.98, 4.98); Calibrated: 30.12.2017, ConvF(4.96, 4.96, 4.96); Calibrated: 30.12.2017;
- Sensor-Surface: 1.4mm (Mechanical Surface Detection)
- Electronics: DAE4 Sn601 (5GHz); Calibrated: 26.10.2017
- Phantom: Flat Phantom 5.0 (front); Type: QD 000 P50 AA; Serial: 1001
- DASY52 52.10.0(1446); SEMCAD X 14.6.10(7417)

Dipole Calibration for Head Tissue/Pin=100mW, dist=10mm, f=5250 MHz/Zoom Scan, dist=1.4mm (8x8x7)/Cube 0: Measurement grid: dx=4mm, dy=4mm, dz=1.4mm
Reference Value = 73.01 V/m; Power Drift = -0.07 dB
Peak SAR (extrapolated) = 27.4 W/kg
SAR(1 g) = 7.85 W/kg; SAR(10 g) = 2.28 W/kg
Maximum value of SAR (measured) = 18.1 W/kg

Dipole Calibration for Head Tissue/Pin=100mW, dist=10mm, f=5600 MHz/Zoom Scan, dist=1.4mm (8x8x7)/Cube 0: Measurement grid: dx=4mm, dy=4mm, dz=1.4mm
Reference Value = 74.12 V/m; Power Drift = -0.07 dB
Peak SAR (extrapolated) = 32.5 W/kg
SAR(1 g) = 8.49 W/kg; SAR(10 g) = 2.43 W/kg
Maximum value of SAR (measured) = 20.3 W/kg

Dipole Calibration for Head Tissue/Pin=100mW, dist=10mm, f=5750 MHz/Zoom Scan, dist=1.4mm (8x8x7)/Cube 0: Measurement grid: dx=4mm, dy=4mm, dz=1.4mm
Reference Value = 71.18 V/m; Power Drift = -0.07 dB
Peak SAR (extrapolated) = 31.2 W/kg
SAR(1 g) = 7.94 W/kg; SAR(10 g) = 2.27 W/kg
Maximum value of SAR (measured) = 19.0 W/kg

Dipole Calibration for Head Tissue/Pin=100mW, dist=10mm, f=5800 MHz/Zoom Scan, dist=1.4mm (8x8x7)/Cube 0: Measurement grid: dx=4mm, dy=4mm, dz=1.4mm
Reference Value = 71.51 V/m; Power Drift = -0.06 dB
Peak SAR (extrapolated) = 31.9 W/kg
SAR(1 g) = 8.09 W/kg; SAR(10 g) = 2.3 W/kg
Maximum value of SAR (measured) = 19.4 W/kg

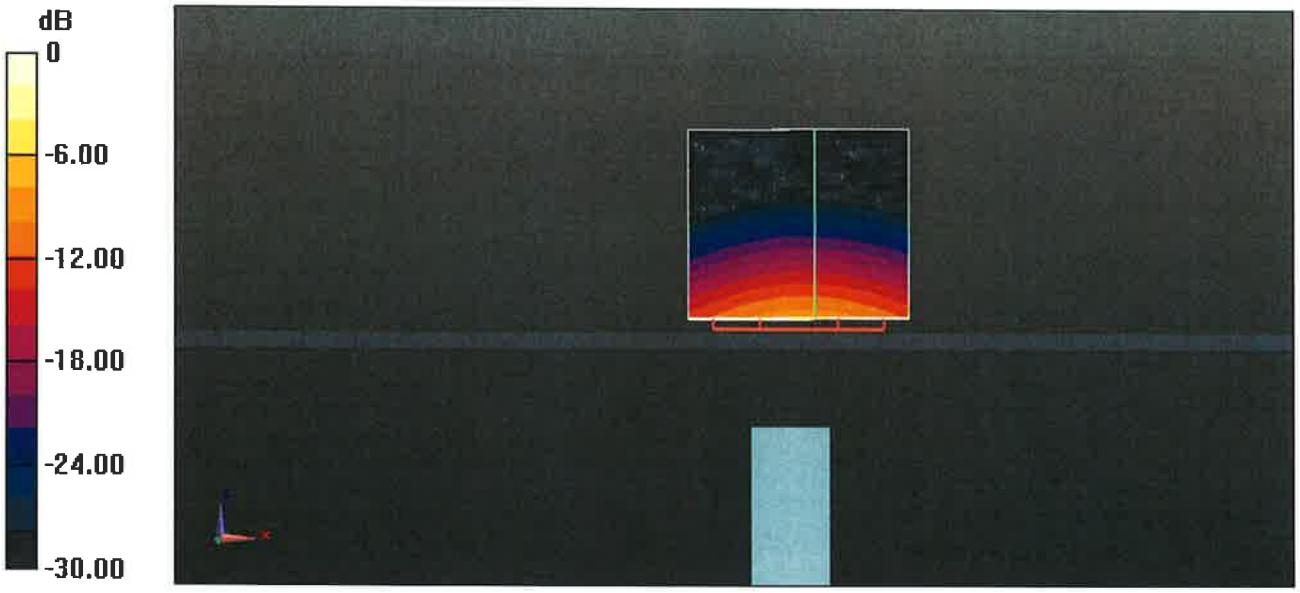

0 dB = 19.4 W/kg = 12.88 dBW/kg

Impedance Measurement Plot for Head TSL

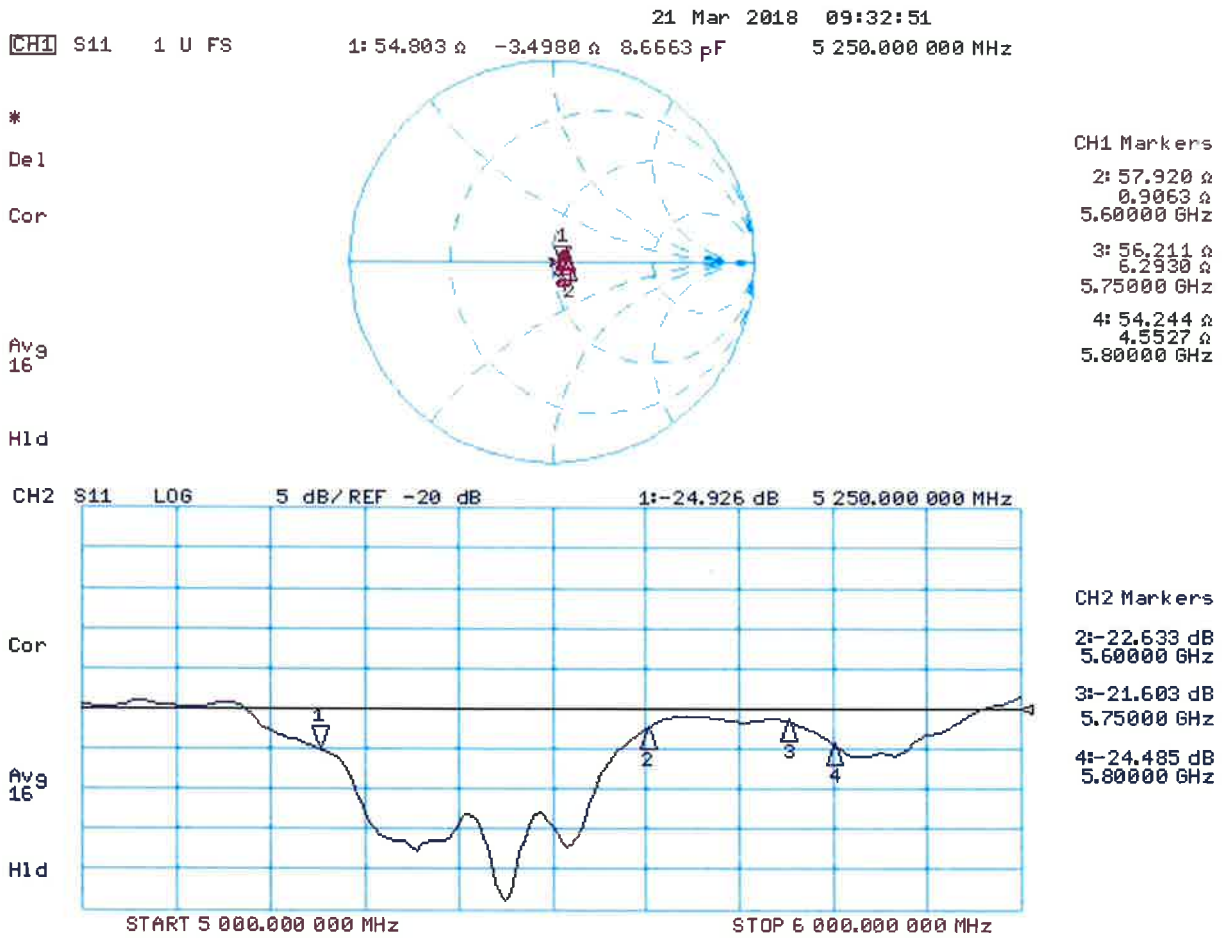

DASY5 Validation Report for Body TSL

Date: 22.03.2018

Test Laboratory: SPEAG, Zurich, Switzerland

DUT: Dipole D5GHzV2; Type: D5GHzV2; Serial: D5GHzV2 - SN:1019

Communication System: UID 0 - CW; Frequency: 5250 MHz, Frequency: 5600 MHz, Frequency: 5750 MHz, Frequency: 5800 MHz
Medium parameters used: f = 5250 MHz; σ = 5.49 S/m; ε_r = 47.1; ρ = 1000 kg/m^3 ,
Medium parameters used: f = 5600 MHz; σ = 5.97 S/m; ε_r = 46.4; ρ = 1000 kg/m^3 ,
Medium parameters used: f = 5750 MHz; σ = 6.18 S/m; ε_r = 46.2; ρ = 1000 kg/m^3 ,
Medium parameters used: f = 5800 MHz; σ = 6.25 S/m; ε_r = 46.1; ρ = 1000 kg/m^3
Phantom section: Flat Section
Measurement Standard: DASY5 (IEEE/IEC/ANSI C63.19-2011)

DASY52 Configuration:

- Probe: EX3DV4 - SN3503; ConvF(5.26, 5.26, 5.26); Calibrated: 30.12.2017, ConvF(4.65, 4.65, 4.65); Calibrated: 30.12.2017, ConvF(4.57, 4.57, 4.57); Calibrated: 30.12.2017, ConvF(4.53, 4.53, 4.53); Calibrated: 30.12.2017;
- Sensor-Surface: 1.4mm (Mechanical Surface Detection)
- Electronics: DAE4 Sn601 (5GHz); Calibrated: 26.10.2017
- Phantom: Flat Phantom 5.0 (back); Type: QD 000 P50 AA; Serial: 1002
- DASY52 52.10.0(1446); SEMCAD X 14.6.10(7417)

Dipole Calibration for Body Tissue/Pin=100mW, dist=10mm, f=5250 MHz/Zoom Scan, dist=1.4mm (8x8x7)/Cube 0: Measurement grid: dx=4mm, dy=4mm, dz=1.4mm
Reference Value = 65.68 V/m; Power Drift = -0.02 dB
Peak SAR (extrapolated) = 29.3 W/kg
SAR(1 g) = 7.54 W/kg; SAR(10 g) = 2.1 W/kg
Maximum value of SAR (measured) = 17.3 W/kg

Dipole Calibration for Body Tissue/Pin=100mW, dist=10mm, f=5600 MHz/Zoom Scan, dist=1.4mm (8x8x7)/Cube 0: Measurement grid: dx=4mm, dy=4mm, dz=1.4mm
Reference Value = 66.11 V/m; Power Drift = -0.03 dB
Peak SAR (extrapolated) = 33.6 W/kg
SAR(1 g) = 7.99 W/kg; SAR(10 g) = 2.24 W/kg
Maximum value of SAR (measured) = 18.9 W/kg

Dipole Calibration for Body Tissue/Pin=100mW, dist=10mm, f=5750 MHz/Zoom Scan, dist=1.4mm (8x8x7)/Cube 0: Measurement grid: dx=4mm, dy=4mm, dz=1.4mm
Reference Value = 63.79 V/m; Power Drift = -0.02 dB
Peak SAR (extrapolated) = 32.1 W/kg
SAR(1 g) = 7.5 W/kg; SAR(10 g) = 2.1 W/kg
Maximum value of SAR (measured) = 17.9 W/kg

Dipole Calibration for Body Tissue/Pin=100mW, dist=10mm, f=5800 MHz/Zoom Scan, dist=1.4mm (8x8x7)/Cube 0: Measurement grid: dx=4mm, dy=4mm, dz=1.4mm
Reference Value = 63.81 V/m; Power Drift = -0.02 dB
Peak SAR (extrapolated) = 32.8 W/kg
SAR(1 g) = 7.58 W/kg; SAR(10 g) = 2.11 W/kg
Maximum value of SAR (measured) = 18.1 W/kg

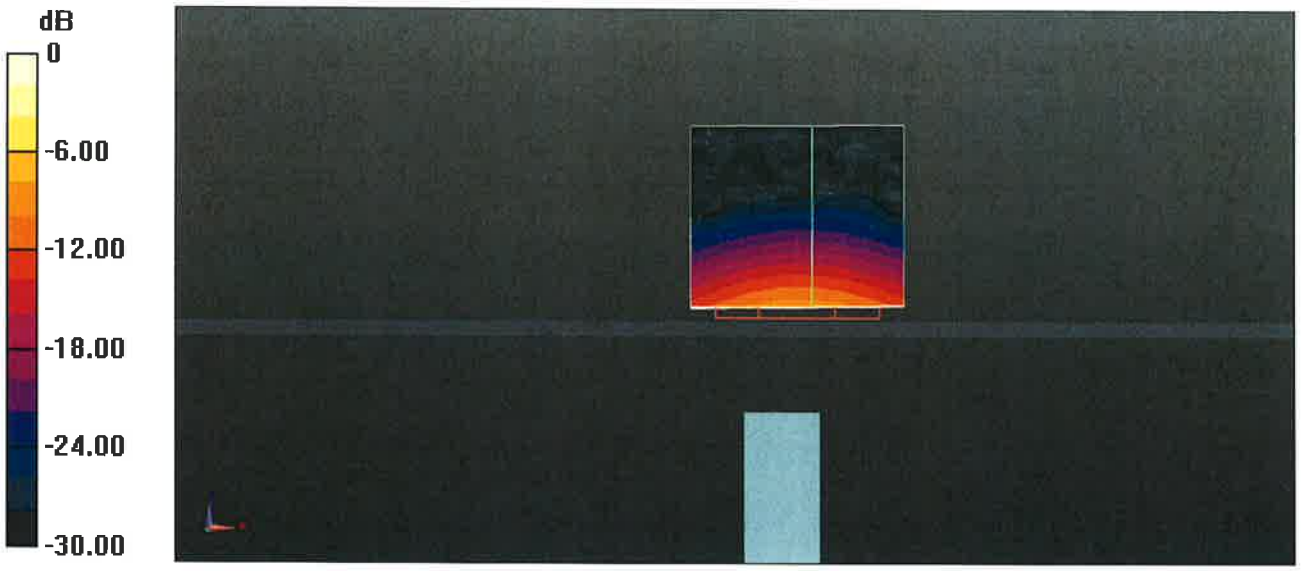

0 dB = 18.1 W/kg = 12.58 dBW/kg

Impedance Measurement Plot for Body TSL

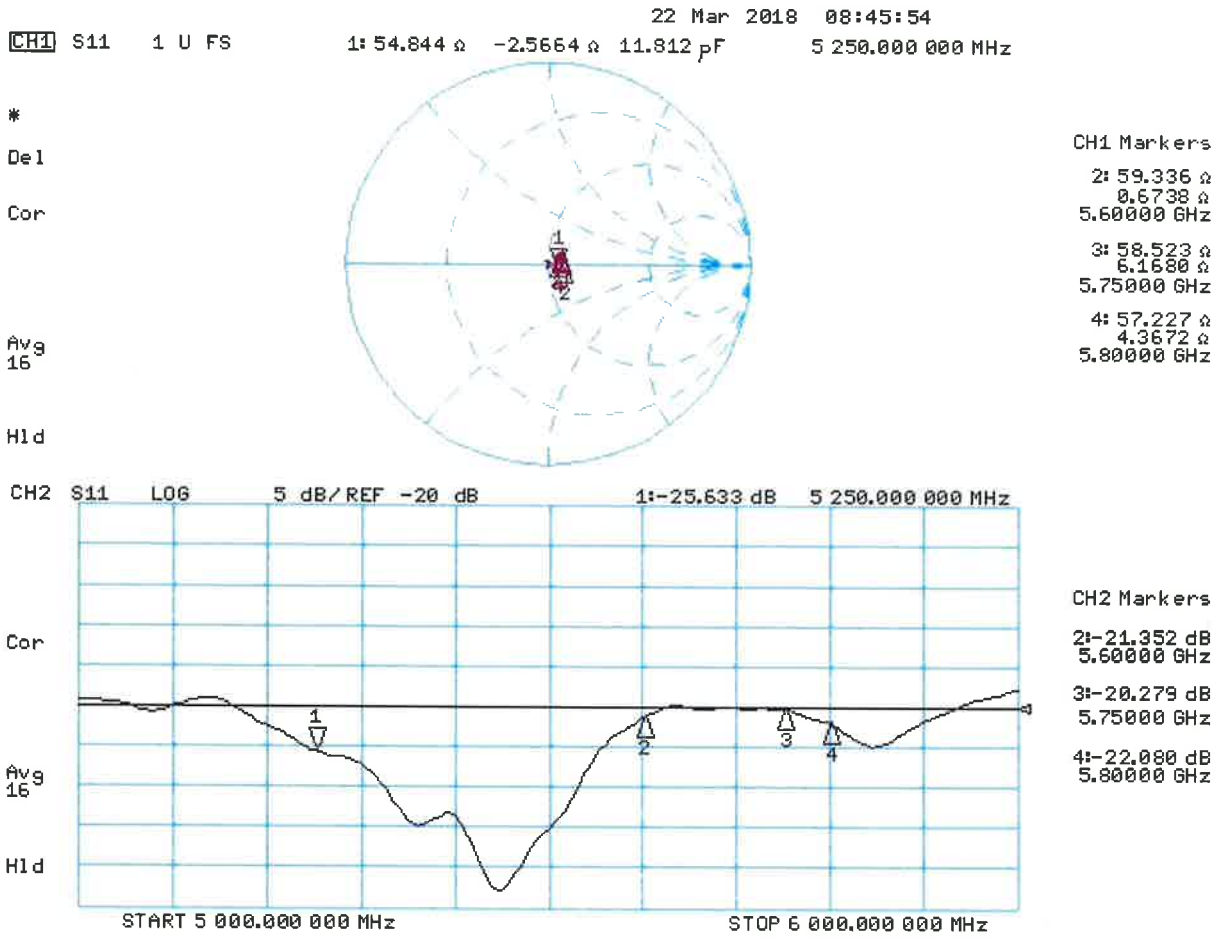

Calibration Laboratory of
Schmid & Partner
Engineering AG
Zeughausstrasse 43, 8004 Zurich, Switzerland

S Schweizerischer Kalibrierdienst
C Service suisse d'étalonnage
C Servizio svizzero di taratura
S Swiss Calibration Service

Accredited by the Swiss Accreditation Service (SAS)
The Swiss Accreditation Service is one of the signatories to the EA Multilateral Agreement for the recognition of calibration certificates

Accreditation No.: SCS 0108

Client **Auden**

Certificate No: EX3-3898_Jun18

CALIBRATION CERTIFICATE

Object	EX3DV4 - SN:3898
Calibration procedure(s)	QA CAL-01.v9, QA CAL-14.v4, QA CAL-23.v5, QA CAL-25.v6 Calibration procedure for dosimetric E-field probes
Calibration date:	June 26, 2018

This calibration certificate documents the traceability to national standards, which realize the physical units of measurements (SI).
The measurements and the uncertainties with confidence probability are given on the following pages and are part of the certificate.

All calibrations have been conducted in the closed laboratory facility: environment temperature (22 ± 3)°C and humidity < 70%.

Calibration Equipment used (M&TE critical for calibration)

Primary Standards	ID	Cal Date (Certificate No.)	Scheduled Calibration
Power meter NRP	SN: 104778	04-Apr-18 (No. 217-02672/02673)	Apr-19
Power sensor NRP-Z91	SN: 103244	04-Apr-18 (No. 217-02672)	Apr-19
Power sensor NRP-Z91	SN: 103245	04-Apr-18 (No. 217-02673)	Apr-19
Reference 20 dB Attenuator	SN: S5277 (20x)	04-Apr-18 (No. 217-02682)	Apr-19
Reference Probe ES3DV2	SN: 3013	30-Dec-17 (No. ES3-3013_Dec17)	Dec-18
DAE4	SN: 660	21-Dec-17 (No. DAE4-660_Dec17)	Dec-18
Secondary Standards	ID	Check Date (in house)	Scheduled Check
Power meter E4419B	SN: GB41293874	06-Apr-16 (in house check Jun-18)	In house check: Jun-20
Power sensor E4412A	SN: MY41498087	06-Apr-16 (in house check Jun-18)	In house check: Jun-20
Power sensor E4412A	SN: 000110210	06-Apr-16 (in house check Jun-18)	In house check: Jun-20
RF generator HP 8648C	SN: US3642U01700	04-Aug-99 (in house check Jun-18)	In house check: Jun-20
Network Analyzer HP 8753E	SN: US37390585	18-Oct-01 (in house check Oct-17)	In house check: Oct-18

	Name	Function	Signature
Calibrated by:	Leif Klysner	Laboratory Technician	
Approved by:	Katja Pokovic	Technical Manager	

Issued: June 26, 2018

This calibration certificate shall not be reproduced except in full without written approval of the laboratory.

Glossary:

TSL	tissue simulating liquid
NORMx,y,z	sensitivity in free space
ConvF	sensitivity in TSL / NORMx,y,z
DCP	diode compression point
CF	crest factor (1/duty_cycle) of the RF signal
A, B, C, D	modulation dependent linearization parameters
Polarization φ	φ rotation around probe axis
Polarization ϑ	ϑ rotation around an axis that is in the plane normal to probe axis (at measurement center), i.e., ϑ = 0 is normal to probe axis
Connector Angle	information used in DASY system to align probe sensor X to the robot coordinate system

Calibration is Performed According to the Following Standards:

a) IEEE Std 1528-2013, "IEEE Recommended Practice for Determining the Peak Spatial-Averaged Specific Absorption Rate (SAR) in the Human Head from Wireless Communications Devices: Measurement Techniques", June 2013
b) IEC 62209-1, ", "Measurement procedure for the assessment of Specific Absorption Rate (SAR) from hand-held and body-mounted devices used next to the ear (frequency range of 300 MHz to 6 GHz)", July 2016
c) IEC 62209-2, "Procedure to determine the Specific Absorption Rate (SAR) for wireless communication devices used in close proximity to the human body (frequency range of 30 MHz to 6 GHz)", March 2010
d) KDB 865664, "SAR Measurement Requirements for 100 MHz to 6 GHz"

Methods Applied and Interpretation of Parameters:

- *NORMx,y,z:* Assessed for E-field polarization ϑ = 0 (f ≤ 900 MHz in TEM-cell; f > 1800 MHz: R22 waveguide). NORMx,y,z are only intermediate values, i.e., the uncertainties of NORMx,y,z does not affect the E^2-field uncertainty inside TSL (see below *ConvF*).
- *NORM(f)x,y,z = NORMx,y,z * frequency_response* (see Frequency Response Chart). This linearization is implemented in DASY4 software versions later than 4.2. The uncertainty of the frequency response is included in the stated uncertainty of *ConvF*.
- *DCPx,y,z:* DCP are numerical linearization parameters assessed based on the data of power sweep with CW signal (no uncertainty required). DCP does not depend on frequency nor media.
- *PAR:* PAR is the Peak to Average Ratio that is not calibrated but determined based on the signal characteristics
- *Ax,y,z; Bx,y,z; Cx,y,z; Dx,y,z; VRx,y,z: A, B, C, D* are numerical linearization parameters assessed based on the data of power sweep for specific modulation signal. The parameters do not depend on frequency nor media. *VR* is the maximum calibration range expressed in RMS voltage across the diode.
- *ConvF and Boundary Effect Parameters:* Assessed in flat phantom using E-field (or Temperature Transfer Standard for f ≤ 800 MHz) and inside waveguide using analytical field distributions based on power measurements for f > 800 MHz. The same setups are used for assessment of the parameters applied for boundary compensation (alpha, depth) of which typical uncertainty values are given. These parameters are used in DASY4 software to improve probe accuracy close to the boundary. The sensitivity in TSL corresponds to *NORMx,y,z * ConvF* whereby the uncertainty corresponds to that given for *ConvF*. A frequency dependent *ConvF* is used in DASY version 4.4 and higher which allows extending the validity from ± 50 MHz to ± 100 MHz.
- *Spherical isotropy (3D deviation from isotropy)*: in a field of low gradients realized using a flat phantom exposed by a patch antenna.
- *Sensor Offset*: The sensor offset corresponds to the offset of virtual measurement center from the probe tip (on probe axis). No tolerance required.
- *Connector Angle*: The angle is assessed using the information gained by determining the *NORMx* (no uncertainty required).

Probe EX3DV4

SN:3898

Manufactured: October 9, 2012
Calibrated: June 26, 2018

Calibrated for DASY/EASY Systems
(Note: non-compatible with DASY2 system!)

DASY/EASY - Parameters of Probe: EX3DV4 - SN:3898

Basic Calibration Parameters

	Sensor X	Sensor Y	Sensor Z	Unc (k=2)
Norm ($\mu V/(V/m)^2$)[A]	0.38	0.35	0.32	± 10.1 %
DCP (mV)[B]	100.1	103.5	96.5	

Modulation Calibration Parameters

UID	Communication System Name		A dB	B dB√μV	C	D dB	VR mV	Unc[E] (k=2)
0	CW	X	0.0	0.0	1.0	0.00	157.1	±3.3 %
		Y	0.0	0.0	1.0		155.4	
		Z	0.0	0.0	1.0		161.2	

Note: For details on UID parameters see Appendix.

Sensor Model Parameters

	C1 fF	C2 fF	α V^{-1}	T1 $ms.V^{-2}$	T2 $ms.V^{-1}$	T3 ms	T4 V^{-2}	T5 V^{-1}	T6
X	33.50	254.8	36.71	7.139	0.577	5.024	0.179	0.406	1.006
Y	36.45	267.7	34.59	7.843	0.296	5.019	1.545	0.110	1.005
Z	32.58	250.9	37.51	6.306	0.665	5.034	0.000	0.434	1.007

The reported uncertainty of measurement is stated as the standard uncertainty of measurement multiplied by the coverage factor k=2, which for a normal distribution corresponds to a coverage probability of approximately 95%.

[A] The uncertainties of Norm X,Y,Z do not affect the E^2-field uncertainty inside TSL (see Pages 5 and 6).
[B] Numerical linearization parameter: uncertainty not required.
[E] Uncertainty is determined using the max. deviation from linear response applying rectangular distribution and is expressed for the square of the field value.

DASY/EASY - Parameters of Probe: EX3DV4 - SN:3898

Calibration Parameter Determined in Head Tissue Simulating Media

f (MHz) [C]	Relative Permittivity [F]	Conductivity (S/m) [F]	ConvF X	ConvF Y	ConvF Z	Alpha [G]	Depth [G] (mm)	Unc (k=2)
750	41.9	0.89	10.63	10.63	10.63	0.51	0.80	± 12.0 %
835	41.5	0.90	10.07	10.07	10.07	0.50	0.80	± 12.0 %
900	41.5	0.97	9.82	9.82	9.82	0.39	0.89	± 12.0 %
1750	40.1	1.37	8.68	8.68	8.68	0.37	0.80	± 12.0 %
1900	40.0	1.40	8.35	8.35	8.35	0.35	0.85	± 12.0 %
2000	40.0	1.40	8.33	8.33	8.33	0.30	0.85	± 12.0 %
2300	39.5	1.67	7.97	7.97	7.97	0.32	0.85	± 12.0 %
2450	39.2	1.80	7.59	7.59	7.59	0.36	0.80	± 12.0 %
2600	39.0	1.96	7.37	7.37	7.37	0.36	0.86	± 12.0 %
3500	37.9	2.91	7.21	7.21	7.21	0.25	1.20	± 13.1 %
5250	35.9	4.71	5.40	5.40	5.40	0.40	1.80	± 13.1 %
5600	35.5	5.07	4.88	4.88	4.88	0.40	1.80	± 13.1 %
5750	35.4	5.22	5.09	5.09	5.09	0.40	1.80	± 13.1 %

[C] Frequency validity above 300 MHz of ± 100 MHz only applies for DASY v4.4 and higher (see Page 2), else it is restricted to ± 50 MHz. The uncertainty is the RSS of the ConvF uncertainty at calibration frequency and the uncertainty for the indicated frequency band. Frequency validity below 300 MHz is ± 10, 25, 40, 50 and 70 MHz for ConvF assessments at 30, 64, 128, 150 and 220 MHz respectively. Above 5 GHz frequency validity can be extended to ± 110 MHz.

[F] At frequencies below 3 GHz, the validity of tissue parameters (ε and σ) can be relaxed to ± 10% if liquid compensation formula is applied to measured SAR values. At frequencies above 3 GHz, the validity of tissue parameters (ε and σ) is restricted to ± 5%. The uncertainty is the RSS of the ConvF uncertainty for indicated target tissue parameters.

[G] Alpha/Depth are determined during calibration. SPEAG warrants that the remaining deviation due to the boundary effect after compensation is always less than ± 1% for frequencies below 3 GHz and below ± 2% for frequencies between 3-6 GHz at any distance larger than half the probe tip diameter from the boundary.

DASY/EASY - Parameters of Probe: EX3DV4 - SN:3898

Calibration Parameter Determined in Body Tissue Simulating Media

f (MHz) [C]	Relative Permittivity [F]	Conductivity (S/m) [F]	ConvF X	ConvF Y	ConvF Z	Alpha [G]	Depth [G] (mm)	Unc (k=2)
750	55.5	0.96	10.28	10.28	10.28	0.42	0.88	± 12.0 %
835	55.2	0.97	10.25	10.25	10.25	0.38	0.96	± 12.0 %
900	55.0	1.05	10.19	10.19	10.19	0.49	0.81	± 12.0 %
1750	53.4	1.49	8.28	8.28	8.28	0.40	0.85	± 12.0 %
1900	53.3	1.52	7.97	7.97	7.97	0.43	0.80	± 12.0 %
2000	53.3	1.52	8.15	8.15	8.15	0.34	0.90	± 12.0 %
2300	52.9	1.81	7.75	7.75	7.75	0.45	0.85	± 12.0 %
2450	52.7	1.95	7.61	7.61	7.61	0.36	0.87	± 12.0 %
2600	52.5	2.16	7.51	7.51	7.51	0.33	0.90	± 12.0 %
3500	51.3	3.31	6.99	6.99	6.99	0.25	1.25	± 13.1 %
5250	48.9	5.36	4.95	4.95	4.95	0.50	1.90	± 13.1 %
5600	48.5	5.77	4.17	4.17	4.17	0.50	1.90	± 13.1 %
5750	48.3	5.94	4.45	4.45	4.45	0.50	1.90	± 13.1 %

[C] Frequency validity above 300 MHz of ± 100 MHz only applies for DASY v4.4 and higher (see Page 2), else it is restricted to ± 50 MHz. The uncertainty is the RSS of the ConvF uncertainty at calibration frequency and the uncertainty for the indicated frequency band. Frequency validity below 300 MHz is ± 10, 25, 40, 50 and 70 MHz for ConvF assessments at 30, 64, 128, 150 and 220 MHz respectively. Above 5 GHz frequency validity can be extended to ± 110 MHz.

[F] At frequencies below 3 GHz, the validity of tissue parameters (ε and σ) can be relaxed to ± 10% if liquid compensation formula is applied to measured SAR values. At frequencies above 3 GHz, the validity of tissue parameters (ε and σ) is restricted to ± 5%. The uncertainty is the RSS of the ConvF uncertainty for indicated target tissue parameters.

[G] Alpha/Depth are determined during calibration. SPEAG warrants that the remaining deviation due to the boundary effect after compensation is always less than ± 1% for frequencies below 3 GHz and below ± 2% for frequencies between 3-6 GHz at any distance larger than half the probe tip diameter from the boundary.

Frequency Response of E-Field

(TEM-Cell:ifi110 EXX, Waveguide: R22)

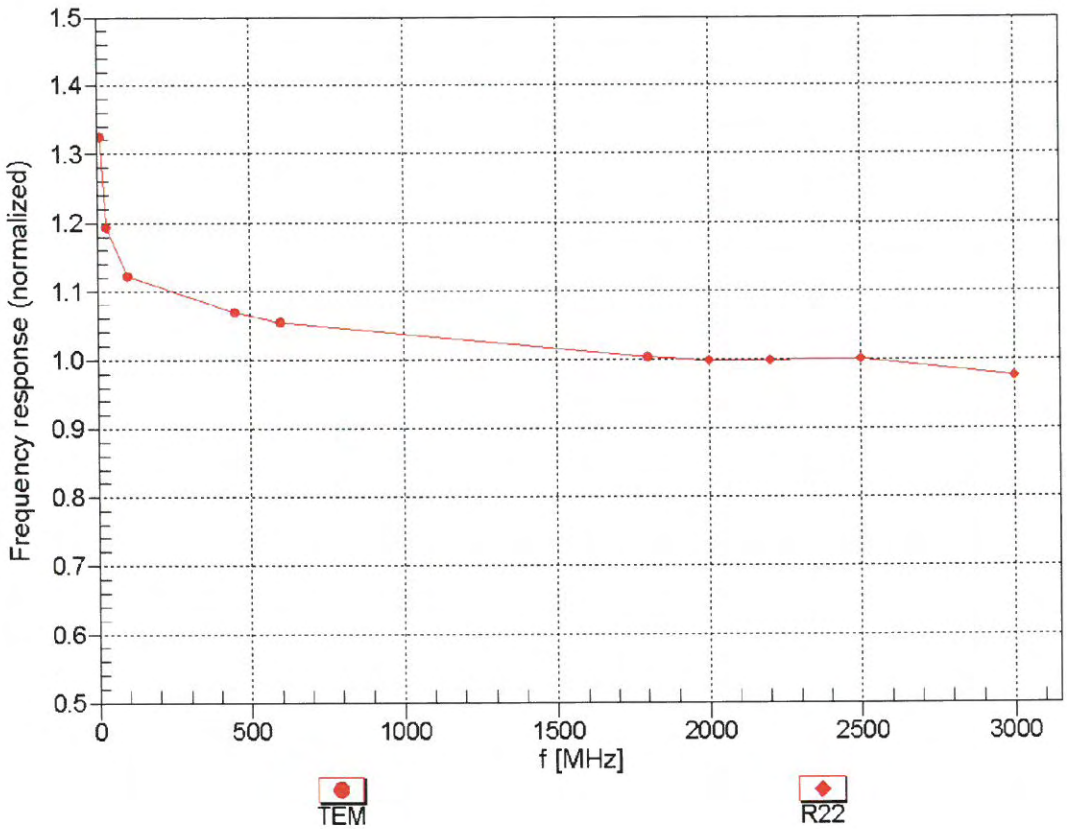

Uncertainty of Frequency Response of E-field: ± 6.3% (k=2)

Receiving Pattern (ϕ), ϑ = 0°

f=600 MHz,TEM

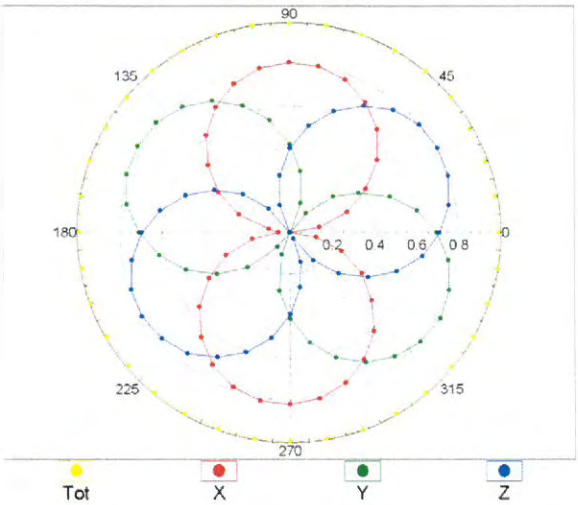

f=1800 MHz,R22

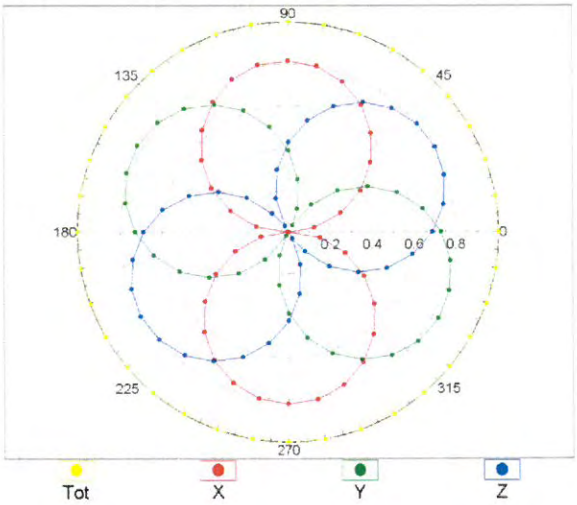

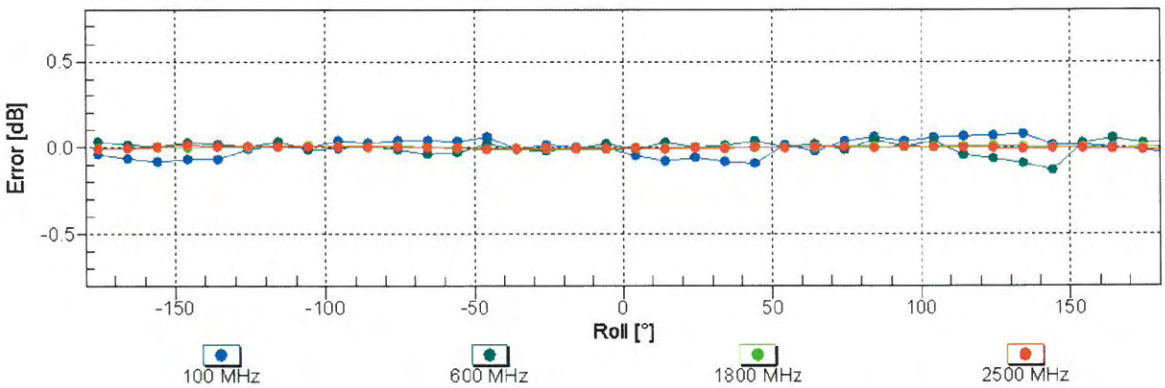

Uncertainty of Axial Isotropy Assessment: ± 0.5% (k=2)

Dynamic Range f(SAR$_{head}$)

(TEM cell , f_{eval}= 1900 MHz)

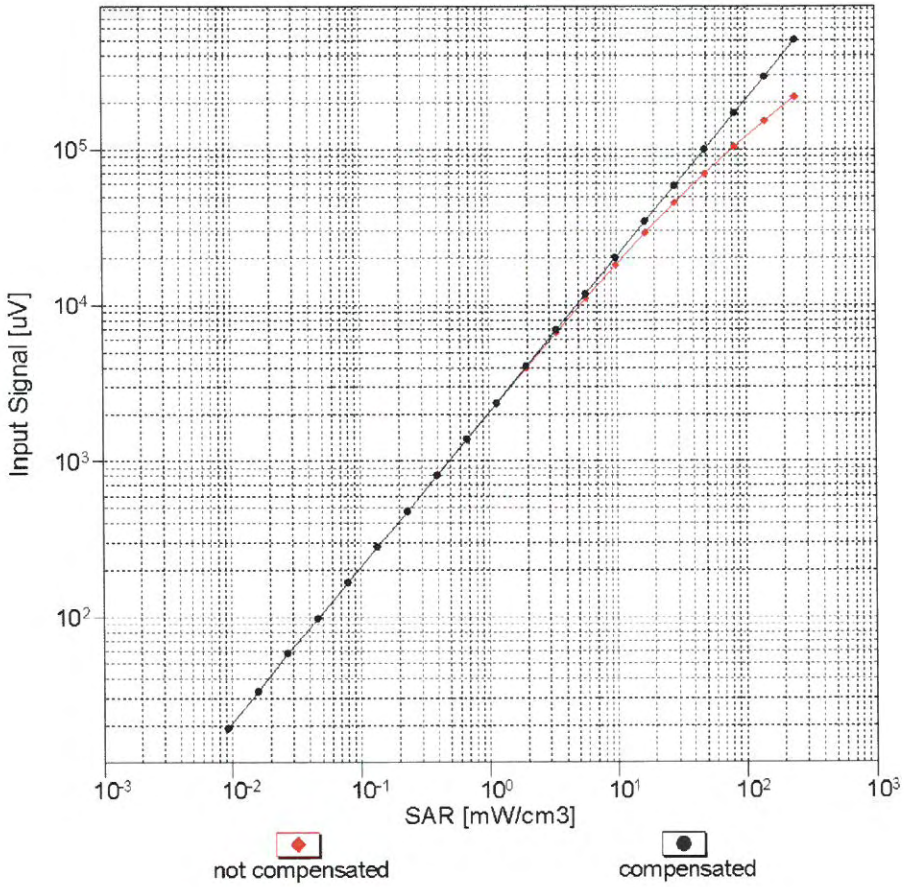

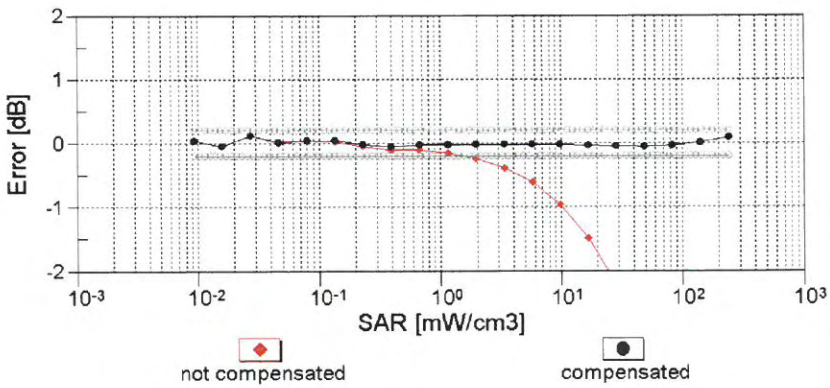

Uncertainty of Linearity Assessment: ± 0.6% (k=2)

Conversion Factor Assessment

f = 900 MHz,WGLS R9 (H_convF)

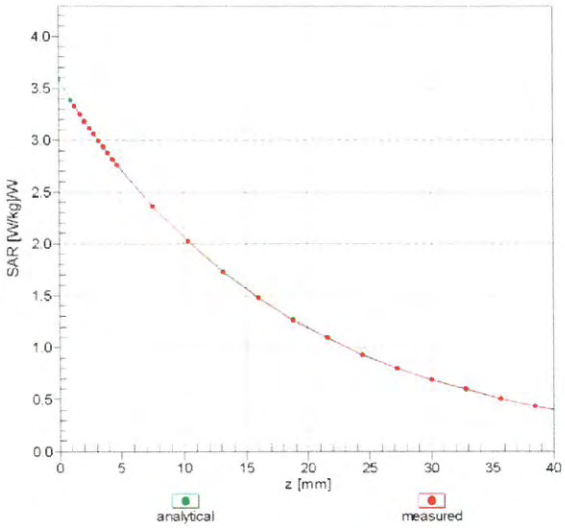

f = 1750 MHz,WGLS R22 (H_convF)

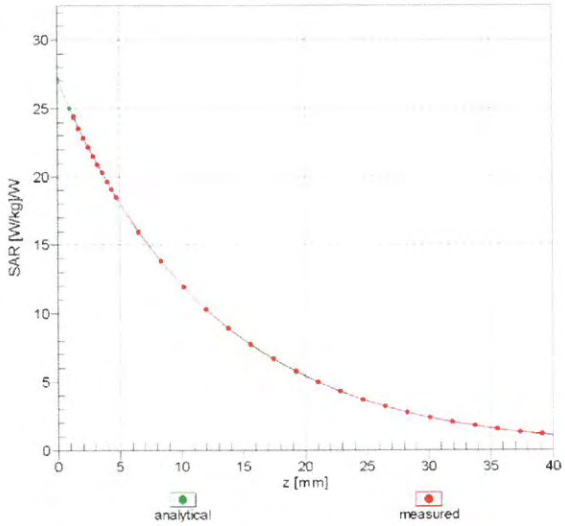

Deviation from Isotropy in Liquid

Error (ϕ, ϑ), f = 900 MHz

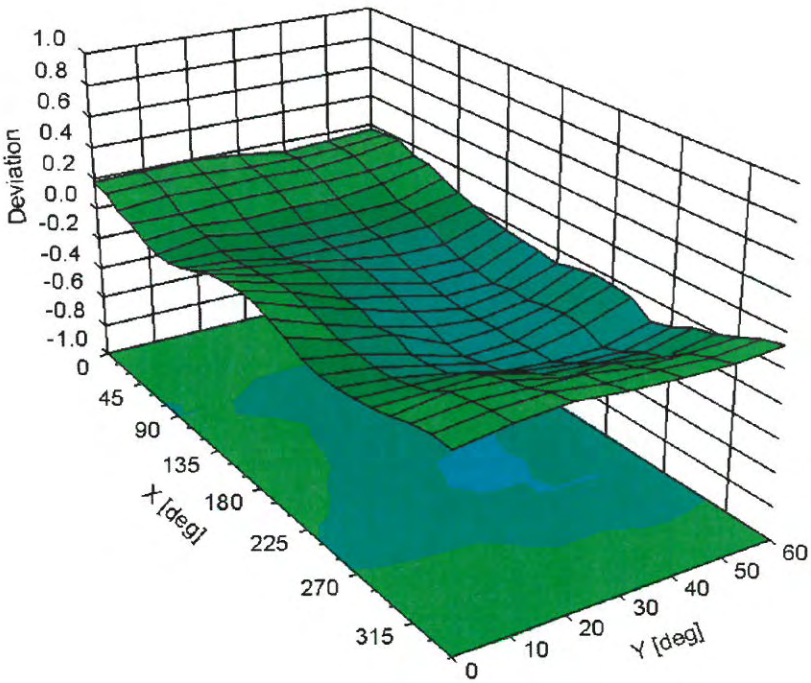

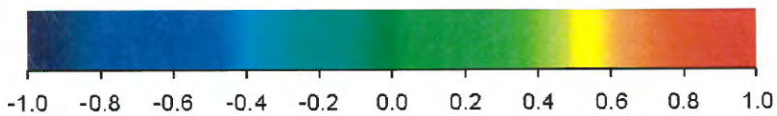

Uncertainty of Spherical Isotropy Assessment: ± 2.6% (k=2)

DASY/EASY - Parameters of Probe: EX3DV4 - SN:3898

Other Probe Parameters

Sensor Arrangement	Triangular
Connector Angle (°)	114.3
Mechanical Surface Detection Mode	enabled
Optical Surface Detection Mode	disabled
Probe Overall Length	337 mm
Probe Body Diameter	10 mm
Tip Length	9 mm
Tip Diameter	2.5 mm
Probe Tip to Sensor X Calibration Point	1 mm
Probe Tip to Sensor Y Calibration Point	1 mm
Probe Tip to Sensor Z Calibration Point	1 mm
Recommended Measurement Distance from Surface	1.4 mm

Appendix: Modulation Calibration Parameters

UID	Communication System Name		A dB	B dB√μV	C	D dB	VR mV	Max Unc[E] (k=2)
0	CW	X	0.00	0.00	1.00	0.00	157.1	± 3.3 %
		Y	0.00	0.00	1.00		155.4	
		Z	0.00	0.00	1.00		161.2	
10010-CAA	SAR Validation (Square, 100ms, 10ms)	X	1.69	62.30	7.79	10.00	20.0	± 9.6 %
		Y	1.95	64.48	9.01		20.0	
		Z	1.68	62.01	7.60		20.0	
10011-CAB	UMTS-FDD (WCDMA)	X	0.80	65.60	13.41	0.00	150.0	± 9.6 %
		Y	0.95	67.23	14.93		150.0	
		Z	0.75	65.25	12.93		150.0	
10012-CAB	IEEE 802.11b WiFi 2.4 GHz (DSSS, 1 Mbps)	X	1.02	62.94	14.30	0.41	150.0	± 9.6 %
		Y	1.10	63.60	14.93		150.0	
		Z	0.98	62.78	14.14		150.0	
10013-CAB	IEEE 802.11g WiFi 2.4 GHz (DSSS-OFDM, 6 Mbps)	X	4.55	66.53	16.78	1.46	150.0	± 9.6 %
		Y	4.65	66.67	16.87		150.0	
		Z	4.51	66.52	16.79		150.0	
10021-DAC	GSM-FDD (TDMA, GMSK)	X	8.14	79.29	16.12	9.39	50.0	± 9.6 %
		Y	100.00	107.07	23.60		50.0	
		Z	6.38	76.49	15.18		50.0	
10023-DAC	GPRS-FDD (TDMA, GMSK, TN 0)	X	5.81	75.34	14.76	9.57	50.0	± 9.6 %
		Y	100.00	106.62	23.45		50.0	
		Z	4.97	73.46	14.08		50.0	
10024-DAC	GPRS-FDD (TDMA, GMSK, TN 0-1)	X	7.77	79.78	14.85	6.56	60.0	± 9.6 %
		Y	100.00	106.08	22.06		60.0	
		Z	3.60	72.65	12.43		60.0	
10025-DAC	EDGE-FDD (TDMA, 8PSK, TN 0)	X	3.31	63.80	21.85	12.57	50.0	± 9.6 %
		Y	4.17	71.66	26.83		50.0	
		Z	3.08	61.66	20.50		50.0	
10026-DAC	EDGE-FDD (TDMA, 8PSK, TN 0-1)	X	6.14	83.35	29.01	9.56	60.0	± 9.6 %
		Y	6.53	85.71	30.39		60.0	
		Z	5.99	82.71	28.72		60.0	
10027-DAC	GPRS-FDD (TDMA, GMSK, TN 0-1-2)	X	20.43	87.49	15.82	4.80	80.0	± 9.6 %
		Y	100.00	106.76	21.62		80.0	
		Z	1.69	67.80	9.68		80.0	
10028-DAC	GPRS-FDD (TDMA, GMSK, TN 0-1-2-3)	X	4.24	75.45	11.62	3.55	100.0	± 9.6 %
		Y	100.00	108.49	21.71		100.0	
		Z	0.57	61.66	6.21		100.0	
10029-DAC	EDGE-FDD (TDMA, 8PSK, TN 0-1-2)	X	4.18	75.36	24.61	7.80	80.0	± 9.6 %
		Y	4.29	76.26	25.26		80.0	
		Z	4.10	75.05	24.49		80.0	
10030-CAA	IEEE 802.15.1 Bluetooth (GFSK, DH1)	X	2.12	68.81	10.41	5.30	70.0	± 9.6 %
		Y	100.00	104.02	20.71		70.0	
		Z	1.40	65.35	8.84		70.0	
10031-CAA	IEEE 802.15.1 Bluetooth (GFSK, DH3)	X	0.25	60.00	3.83	1.88	100.0	± 9.6 %
		Y	100.00	101.00	17.48		100.0	
		Z	0.33	60.00	2.77		100.0	

10032-CAA	IEEE 802.15.1 Bluetooth (GFSK, DH5)	X	30.07	60.77	1.48	1.17	100.0	± 9.6 %
		Y	100.00	101.88	17.11		100.0	
		Z	0.00	174.94	38.25		100.0	
10033-CAA	IEEE 802.15.1 Bluetooth (PI/4-DQPSK, DH1)	X	3.96	76.50	17.15	5.30	70.0	± 9.6 %
		Y	7.49	87.27	21.85		70.0	
		Z	3.58	74.96	16.33		70.0	
10034-CAA	IEEE 802.15.1 Bluetooth (PI/4-DQPSK, DH3)	X	1.25	65.98	11.05	1.88	100.0	± 9.6 %
		Y	2.14	73.11	15.33		100.0	
		Z	1.05	64.23	9.81		100.0	
10035-CAA	IEEE 802.15.1 Bluetooth (PI/4-DQPSK, DH5)	X	0.94	64.20	9.88	1.17	100.0	± 9.6 %
		Y	1.53	70.07	13.85		100.0	
		Z	0.79	62.58	8.60		100.0	
10036-CAA	IEEE 802.15.1 Bluetooth (8-DPSK, DH1)	X	4.78	79.17	18.17	5.30	70.0	± 9.6 %
		Y	10.80	92.72	23.61		70.0	
		Z	4.26	77.37	17.29		70.0	
10037-CAA	IEEE 802.15.1 Bluetooth (8-DPSK, DH3)	X	1.17	65.46	10.80	1.88	100.0	± 9.6 %
		Y	1.93	71.93	14.84		100.0	
		Z	1.00	63.85	9.61		100.0	
10038-CAA	IEEE 802.15.1 Bluetooth (8-DPSK, DH5)	X	0.95	64.43	10.11	1.17	100.0	± 9.6 %
		Y	1.54	70.39	14.12		100.0	
		Z	0.80	62.79	8.82		100.0	
10039-CAB	CDMA2000 (1xRTT, RC1)	X	0.72	62.82	8.75	0.00	150.0	± 9.6 %
		Y	1.38	69.54	13.32		150.0	
		Z	0.58	61.03	7.20		150.0	
10042-CAB	IS-54 / IS-136 FDD (TDMA/FDM, PI/4-DQPSK, Halfrate)	X	2.41	67.55	10.58	7.78	50.0	± 9.6 %
		Y	99.98	103.36	21.18		50.0	
		Z	2.05	65.90	9.79		50.0	
10044-CAA	IS-91/EIA/TIA-553 FDD (FDMA, FM)	X	0.20	125.97	5.04	0.00	150.0	± 9.6 %
		Y	0.01	112.04	10.35		150.0	
		Z	0.61	133.03	4.06		150.0	
10048-CAA	DECT (TDD, TDMA/FDM, GFSK, Full Slot, 24)	X	4.76	68.95	13.68	13.80	25.0	± 9.6 %
		Y	7.25	74.59	15.66		25.0	
		Z	4.64	68.33	13.48		25.0	
10049-CAA	DECT (TDD, TDMA/FDM, GFSK, Double Slot, 12)	X	4.58	71.29	13.42	10.79	40.0	± 9.6 %
		Y	8.45	78.87	16.13		40.0	
		Z	4.34	70.47	13.12		40.0	
10056-CAA	UMTS-TDD (TD-SCDMA, 1.28 Mcps)	X	8.33	81.59	19.39	9.03	50.0	± 9.6 %
		Y	21.27	96.66	24.69		50.0	
		Z	7.46	79.75	18.62		50.0	
10058-DAC	EDGE-FDD (TDMA, 8PSK, TN 0-1-2-3)	X	3.41	71.82	22.32	6.55	100.0	± 9.6 %
		Y	3.49	72.35	22.72		100.0	
		Z	3.34	71.61	22.25		100.0	
10059-CAB	IEEE 802.11b WiFi 2.4 GHz (DSSS, 2 Mbps)	X	1.02	63.71	14.72	0.61	110.0	± 9.6 %
		Y	1.11	64.39	15.38		110.0	
		Z	0.99	63.57	14.57		110.0	
10060-CAB	IEEE 802.11b WiFi 2.4 GHz (DSSS, 5.5 Mbps)	X	3.43	87.68	21.53	1.30	110.0	± 9.6 %
		Y	5.40	96.56	25.59		110.0	
		Z	3.71	88.36	21.30		110.0	

10061-CAB	IEEE 802.11b WiFi 2.4 GHz (DSSS, 11 Mbps)	X	1.81	74.31	19.15	2.04	110.0	± 9.6 %
		Y	1.95	75.61	20.26		110.0	
		Z	1.80	74.59	19.18		110.0	
10062-CAC	IEEE 802.11a/h WiFi 5 GHz (OFDM, 6 Mbps)	X	4.34	66.48	16.21	0.49	100.0	± 9.6 %
		Y	4.46	66.70	16.35		100.0	
		Z	4.30	66.43	16.19		100.0	
10063-CAC	IEEE 802.11a/h WiFi 5 GHz (OFDM, 9 Mbps)	X	4.35	66.57	16.30	0.72	100.0	± 9.6 %
		Y	4.47	66.77	16.43		100.0	
		Z	4.31	66.53	16.28		100.0	
10064-CAC	IEEE 802.11a/h WiFi 5 GHz (OFDM, 12 Mbps)	X	4.59	66.77	16.50	0.86	100.0	± 9.6 %
		Y	4.72	66.97	16.62		100.0	
		Z	4.54	66.73	16.49		100.0	
10065-CAC	IEEE 802.11a/h WiFi 5 GHz (OFDM, 18 Mbps)	X	4.46	66.60	16.56	1.21	100.0	± 9.6 %
		Y	4.58	66.80	16.69		100.0	
		Z	4.42	66.57	16.55		100.0	
10066-CAC	IEEE 802.11a/h WiFi 5 GHz (OFDM, 24 Mbps)	X	4.47	66.59	16.70	1.46	100.0	± 9.6 %
		Y	4.59	66.78	16.82		100.0	
		Z	4.43	66.57	16.70		100.0	
10067-CAC	IEEE 802.11a/h WiFi 5 GHz (OFDM, 36 Mbps)	X	4.76	66.88	17.18	2.04	100.0	± 9.6 %
		Y	4.87	67.01	17.27		100.0	
		Z	4.72	66.88	17.19		100.0	
10068-CAC	IEEE 802.11a/h WiFi 5 GHz (OFDM, 48 Mbps)	X	4.79	66.79	17.34	2.55	100.0	± 9.6 %
		Y	4.89	66.91	17.42		100.0	
		Z	4.76	66.81	17.37		100.0	
10069-CAC	IEEE 802.11a/h WiFi 5 GHz (OFDM, 54 Mbps)	X	4.85	66.83	17.53	2.67	100.0	± 9.6 %
		Y	4.96	66.93	17.60		100.0	
		Z	4.82	66.84	17.55		100.0	
10071-CAB	IEEE 802.11g WiFi 2.4 GHz (DSSS/OFDM, 9 Mbps)	X	4.64	66.60	17.07	1.99	100.0	± 9.6 %
		Y	4.73	66.71	17.14		100.0	
		Z	4.61	66.60	17.09		100.0	
10072-CAB	IEEE 802.11g WiFi 2.4 GHz (DSSS/OFDM, 12 Mbps)	X	4.59	66.81	17.24	2.30	100.0	± 9.6 %
		Y	4.68	66.93	17.31		100.0	
		Z	4.56	66.82	17.26		100.0	
10073-CAB	IEEE 802.11g WiFi 2.4 GHz (DSSS/OFDM, 18 Mbps)	X	4.65	66.99	17.56	2.83	100.0	± 9.6 %
		Y	4.73	67.06	17.62		100.0	
		Z	4.63	67.03	17.60		100.0	
10074-CAB	IEEE 802.11g WiFi 2.4 GHz (DSSS/OFDM, 24 Mbps)	X	4.66	66.95	17.71	3.30	100.0	± 9.6 %
		Y	4.73	66.98	17.75		100.0	
		Z	4.64	67.00	17.76		100.0	
10075-CAB	IEEE 802.11g WiFi 2.4 GHz (DSSS/OFDM, 36 Mbps)	X	4.69	66.96	17.95	3.82	90.0	± 9.6 %
		Y	4.74	66.98	17.99		90.0	
		Z	4.67	67.01	18.00		90.0	
10076-CAB	IEEE 802.11g WiFi 2.4 GHz (DSSS/OFDM, 48 Mbps)	X	4.73	66.85	18.13	4.15	90.0	± 9.6 %
		Y	4.78	66.83	18.15		90.0	
		Z	4.72	66.91	18.18		90.0	
10077-CAB	IEEE 802.11g WiFi 2.4 GHz (DSSS/OFDM, 54 Mbps)	X	4.77	66.95	18.24	4.30	90.0	± 9.6 %
		Y	4.80	66.91	18.25		90.0	
		Z	4.75	67.02	18.30		90.0	

10081-CAB	CDMA2000 (1xRTT, RC3)	X	0.38	60.00	6.39	0.00	150.0	± 9.6 %
		Y	0.64	64.18	10.31		150.0	
		Z	0.35	60.00	5.73		150.0	
10082-CAB	IS-54 / IS-136 FDD (TDMA/FDM, PI/4-DQPSK, Fullrate)	X	0.65	60.00	3.24	4.77	80.0	± 9.6 %
		Y	0.59	60.00	3.58		80.0	
		Z	0.77	60.00	2.82		80.0	
10090-DAC	GPRS-FDD (TDMA, GMSK, TN 0-4)	X	8.32	80.40	15.07	6.56	60.0	± 9.6 %
		Y	100.00	106.11	22.09		60.0	
		Z	3.81	73.14	12.63		60.0	
10097-CAB	UMTS-FDD (HSDPA)	X	1.59	67.11	14.48	0.00	150.0	± 9.6 %
		Y	1.78	68.27	15.54		150.0	
		Z	1.53	66.79	14.13		150.0	
10098-CAB	UMTS-FDD (HSUPA, Subtest 2)	X	1.56	67.03	14.45	0.00	150.0	± 9.6 %
		Y	1.74	68.21	15.51		150.0	
		Z	1.49	66.72	14.09		150.0	
10099-DAC	EDGE-FDD (TDMA, 8PSK, TN 0-4)	X	6.18	83.46	29.05	9.56	60.0	± 9.6 %
		Y	6.58	85.86	30.44		60.0	
		Z	6.03	82.82	28.76		60.0	
10100-CAD	LTE-FDD (SC-FDMA, 100% RB, 20 MHz, QPSK)	X	2.72	69.08	15.98	0.00	150.0	± 9.6 %
		Y	2.95	70.14	16.61		150.0	
		Z	2.65	68.83	15.82		150.0	
10101-CAD	LTE-FDD (SC-FDMA, 100% RB, 20 MHz, 16-QAM)	X	2.93	66.79	15.42	0.00	150.0	± 9.6 %
		Y	3.08	67.40	15.80		150.0	
		Z	2.87	66.64	15.31		150.0	
10102-CAD	LTE-FDD (SC-FDMA, 100% RB, 20 MHz, 64-QAM)	X	3.04	66.86	15.56	0.00	150.0	± 9.6 %
		Y	3.19	67.42	15.91		150.0	
		Z	2.98	66.71	15.46		150.0	
10103-CAD	LTE-TDD (SC-FDMA, 100% RB, 20 MHz, QPSK)	X	4.93	72.92	19.19	3.98	65.0	± 9.6 %
		Y	5.26	74.03	19.74		65.0	
		Z	4.58	71.89	18.80		65.0	
10104-CAD	LTE-TDD (SC-FDMA, 100% RB, 20 MHz, 16-QAM)	X	5.11	71.27	19.17	3.98	65.0	± 9.6 %
		Y	5.30	71.90	19.52		65.0	
		Z	5.01	71.07	19.11		65.0	
10105-CAD	LTE-TDD (SC-FDMA, 100% RB, 20 MHz, 64-QAM)	X	4.77	69.77	18.78	3.98	65.0	± 9.6 %
		Y	5.03	70.66	19.26		65.0	
		Z	4.43	68.53	18.24		65.0	
10108-CAE	LTE-FDD (SC-FDMA, 100% RB, 10 MHz, QPSK)	X	2.33	68.44	15.78	0.00	150.0	± 9.6 %
		Y	2.54	69.44	16.43		150.0	
		Z	2.26	68.22	15.60		150.0	
10109-CAE	LTE-FDD (SC-FDMA, 100% RB, 10 MHz, 16-QAM)	X	2.56	66.71	15.19	0.00	150.0	± 9.6 %
		Y	2.73	67.35	15.67		150.0	
		Z	2.50	66.54	15.04		150.0	
10110-CAE	LTE-FDD (SC-FDMA, 100% RB, 5 MHz, QPSK)	X	1.82	67.51	15.05	0.00	150.0	± 9.6 %
		Y	2.03	68.62	15.91		150.0	
		Z	1.75	67.24	14.78		150.0	
10111-CAE	LTE-FDD (SC-FDMA, 100% RB, 5 MHz, 16-QAM)	X	2.27	67.71	15.18	0.00	150.0	± 9.6 %
		Y	2.48	68.62	15.97		150.0	
		Z	2.19	67.44	14.91		150.0	

10112-CAE	LTE-FDD (SC-FDMA, 100% RB, 10 MHz, 64-QAM)	X	2.69	66.83	15.30	0.00	150.0	± 9.6 %
		Y	2.86	67.43	15.75		150.0	
		Z	2.63	66.68	15.17		150.0	
10113-CAE	LTE-FDD (SC-FDMA, 100% RB, 5 MHz, 64-QAM)	X	2.41	67.96	15.37	0.00	150.0	± 9.6 %
		Y	2.63	68.82	16.12		150.0	
		Z	2.34	67.71	15.11		150.0	
10114-CAC	IEEE 802.11n (HT Greenfield, 13.5 Mbps, BPSK)	X	4.82	66.90	16.25	0.00	150.0	± 9.6 %
		Y	4.93	67.13	16.33		150.0	
		Z	4.78	66.85	16.23		150.0	
10115-CAC	IEEE 802.11n (HT Greenfield, 81 Mbps, 16-QAM)	X	5.06	66.97	16.28	0.00	150.0	± 9.6 %
		Y	5.17	67.19	16.37		150.0	
		Z	5.02	66.92	16.27		150.0	
10116-CAC	IEEE 802.11n (HT Greenfield, 135 Mbps, 64-QAM)	X	4.89	67.06	16.26	0.00	150.0	± 9.6 %
		Y	5.01	67.32	16.36		150.0	
		Z	4.85	67.00	16.23		150.0	
10117-CAC	IEEE 802.11n (HT Mixed, 13.5 Mbps, BPSK)	X	4.81	66.81	16.22	0.00	150.0	± 9.6 %
		Y	4.92	67.09	16.33		150.0	
		Z	4.76	66.73	16.19		150.0	
10118-CAC	IEEE 802.11n (HT Mixed, 81 Mbps, 16-QAM)	X	5.14	67.19	16.40	0.00	150.0	± 9.6 %
		Y	5.24	67.35	16.46		150.0	
		Z	5.10	67.13	16.39		150.0	
10119-CAC	IEEE 802.11n (HT Mixed, 135 Mbps, 64-QAM)	X	4.90	67.08	16.27	0.00	150.0	± 9.6 %
		Y	5.01	67.31	16.36		150.0	
		Z	4.86	67.03	16.26		150.0	
10140-CAD	LTE-FDD (SC-FDMA, 100% RB, 15 MHz, 16-QAM)	X	3.05	66.87	15.46	0.00	150.0	± 9.6 %
		Y	3.21	67.43	15.82		150.0	
		Z	2.99	66.72	15.35		150.0	
10141-CAD	LTE-FDD (SC-FDMA, 100% RB, 15 MHz, 64-QAM)	X	3.18	67.08	15.69	0.00	150.0	± 9.6 %
		Y	3.34	67.60	16.02		150.0	
		Z	3.13	66.95	15.59		150.0	
10142-CAD	LTE-FDD (SC-FDMA, 100% RB, 3 MHz, QPSK)	X	1.54	66.93	13.93	0.00	150.0	± 9.6 %
		Y	1.80	68.60	15.30		150.0	
		Z	1.45	66.43	13.44		150.0	
10143-CAD	LTE-FDD (SC-FDMA, 100% RB, 3 MHz, 16-QAM)	X	1.95	67.19	13.68	0.00	150.0	± 9.6 %
		Y	2.31	69.19	15.25		150.0	
		Z	1.82	66.48	13.07		150.0	
10144-CAD	LTE-FDD (SC-FDMA, 100% RB, 3 MHz, 64-QAM)	X	1.68	64.49	11.75	0.00	150.0	± 9.6 %
		Y	1.96	66.06	13.17		150.0	
		Z	1.59	63.95	11.21		150.0	
10145-CAE	LTE-FDD (SC-FDMA, 100% RB, 1.4 MHz, QPSK)	X	0.60	60.00	6.23	0.00	150.0	± 9.6 %
		Y	0.81	61.91	8.55		150.0	
		Z	0.56	60.00	5.77		150.0	
10146-CAE	LTE-FDD (SC-FDMA, 100% RB, 1.4 MHz, 16-QAM)	X	0.80	59.27	5.40	0.00	150.0	± 9.6 %
		Y	1.09	61.29	7.29		150.0	
		Z	0.82	60.00	5.60		150.0	
10147-CAE	LTE-FDD (SC-FDMA, 100% RB, 1.4 MHz, 64-QAM)	X	0.87	60.00	5.94	0.00	150.0	± 9.6 %
		Y	1.16	61.79	7.66		150.0	
		Z	0.83	60.00	5.66		150.0	

10149-CAD	LTE-FDD (SC-FDMA, 50% RB, 20 MHz, 16-QAM)	X	2.57	66.78	15.24	0.00	150.0	± 9.6 %
		Y	2.74	67.43	15.72		150.0	
		Z	2.51	66.62	15.10		150.0	
10150-CAD	LTE-FDD (SC-FDMA, 50% RB, 20 MHz, 64-QAM)	X	2.70	66.90	15.35	0.00	150.0	± 9.6 %
		Y	2.87	67.49	15.80		150.0	
		Z	2.64	66.75	15.22		150.0	
10151-CAD	LTE-TDD (SC-FDMA, 50% RB, 20 MHz, QPSK)	X	5.20	75.69	20.31	3.98	65.0	± 9.6 %
		Y	5.52	76.67	20.86		65.0	
		Z	5.11	75.61	20.30		65.0	
10152-CAD	LTE-TDD (SC-FDMA, 50% RB, 20 MHz, 16-QAM)	X	4.61	71.04	18.56	3.98	65.0	± 9.6 %
		Y	4.81	71.75	19.05		65.0	
		Z	4.51	70.85	18.48		65.0	
10153-CAD	LTE-TDD (SC-FDMA, 50% RB, 20 MHz, 64-QAM)	X	5.00	72.32	19.54	3.98	65.0	± 9.6 %
		Y	5.19	72.90	19.95		65.0	
		Z	4.91	72.18	19.49		65.0	
10154-CAE	LTE-FDD (SC-FDMA, 50% RB, 10 MHz, QPSK)	X	1.86	67.89	15.29	0.00	150.0	± 9.6 %
		Y	2.08	69.04	16.17		150.0	
		Z	1.79	67.61	15.01		150.0	
10155-CAE	LTE-FDD (SC-FDMA, 50% RB, 10 MHz, 16-QAM)	X	2.27	67.76	15.22	0.00	150.0	± 9.6 %
		Y	2.49	68.66	16.00		150.0	
		Z	2.20	67.49	14.95		150.0	
10156-CAE	LTE-FDD (SC-FDMA, 50% RB, 5 MHz, QPSK)	X	1.32	66.12	12.94	0.00	150.0	± 9.6 %
		Y	1.62	68.40	14.78		150.0	
		Z	1.21	65.37	12.25		150.0	
10157-CAE	LTE-FDD (SC-FDMA, 50% RB, 5 MHz, 16-QAM)	X	1.44	64.08	11.00	0.00	150.0	± 9.6 %
		Y	1.77	66.31	12.90		150.0	
		Z	1.32	63.32	10.28		150.0	
10158-CAE	LTE-FDD (SC-FDMA, 50% RB, 10 MHz, 64-QAM)	X	2.43	68.06	15.43	0.00	150.0	± 9.6 %
		Y	2.64	68.91	16.18		150.0	
		Z	2.35	67.80	15.18		150.0	
10159-CAE	LTE-FDD (SC-FDMA, 50% RB, 5 MHz, 64-QAM)	X	1.49	64.29	11.15	0.00	150.0	± 9.6 %
		Y	1.86	66.72	13.15		150.0	
		Z	1.37	63.47	10.40		150.0	
10160-CAD	LTE-FDD (SC-FDMA, 50% RB, 15 MHz, QPSK)	X	2.40	68.04	15.67	0.00	150.0	± 9.6 %
		Y	2.57	68.70	16.20		150.0	
		Z	2.35	67.89	15.52		150.0	
10161-CAD	LTE-FDD (SC-FDMA, 50% RB, 15 MHz, 16-QAM)	X	2.58	66.83	15.17	0.00	150.0	± 9.6 %
		Y	2.76	67.47	15.69		150.0	
		Z	2.52	66.65	15.01		150.0	
10162-CAD	LTE-FDD (SC-FDMA, 50% RB, 15 MHz, 64-QAM)	X	2.69	67.09	15.34	0.00	150.0	± 9.6 %
		Y	2.87	67.70	15.84		150.0	
		Z	2.63	66.93	15.18		150.0	
10166-CAE	LTE-FDD (SC-FDMA, 50% RB, 1.4 MHz, QPSK)	X	3.02	68.47	18.56	3.01	150.0	± 9.6 %
		Y	3.28	69.67	19.13		150.0	
		Z	2.95	68.38	18.56		150.0	
10167-CAE	LTE-FDD (SC-FDMA, 50% RB, 1.4 MHz, 16-QAM)	X	3.50	70.86	18.74	3.01	150.0	± 9.6 %
		Y	4.10	73.43	19.89		150.0	
		Z	3.40	70.66	18.68		150.0	