Honeywell

CT47 Series

Quick Start Guide

CT47-A-EN-QS-01-AG Rev (b)
12/22

Agency Models

CT47 series: CT47X0N, CT47X1N

Note: *Due to variations in model configurations, your computer may appear different than illustrated.*

Out of the Box

Make sure that your shipping box contains these items:

- CT47 mobile computer
- Rechargeable Li-ion battery
- Hand strap
- USB Type A to Type C cable
- Product documentation
- Tamper-resistant T6 screw for SIM/microSD door

If you ordered accessories for your mobile computer, verify that they are also included with the order. Be sure to keep the original packaging in case you need to return the mobile computer for service.

Note: *CT47X0N models do not include a WWAN radio.*

Memory Card Specifications

Honeywell recommends the use of Single Level Cell (SLC) industrial grade microSD™ or microSDHC™ memory cards with mobile computers for maximum performance and durability. Contact a Honeywell sales representative for additional information on qualified memory card options.

Computer Features

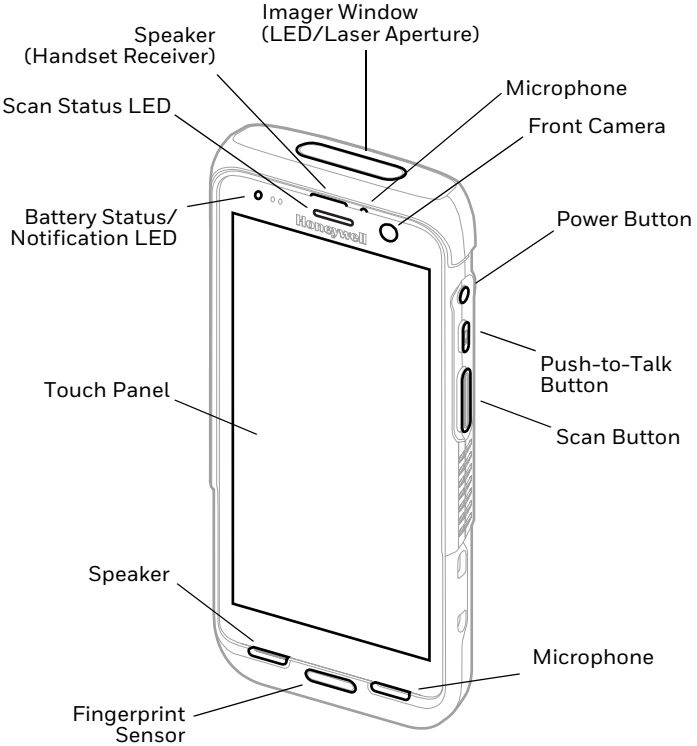

Note: *Hand strap not shown.*

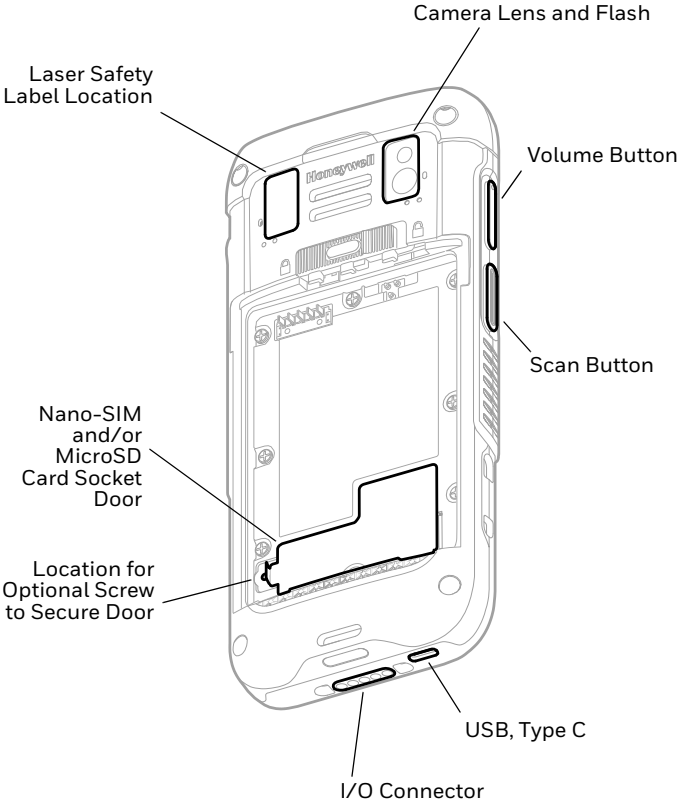

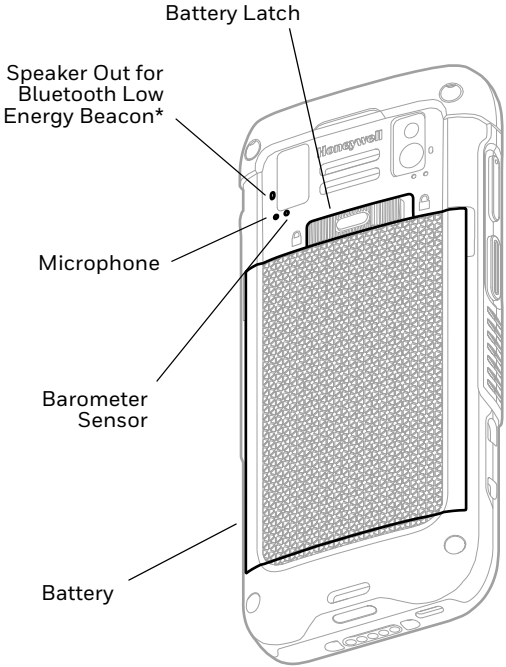

* Part of Honeywell Device Finder solution when the CT47 mobile computer is registered with Operational Intelligence. The second Bluetooth Low Energy Beacon emits a signal that a searching device can detect to locate a lost or misplaced mobile computer. The speaker out will beep when the device is in range and the searching device activates the beep notification.

Install a Nano-SIM Card(s)

For CT47X1N models only. Either a nano-SIM card or embedded SIM (eSIM) is used to activate the phone and connect to a mobile network. Supported SIM type and activation method varies by model and model configuration. Refer to the user guide for additional information on eSIM or dual nano-SIM activation and provisioning.

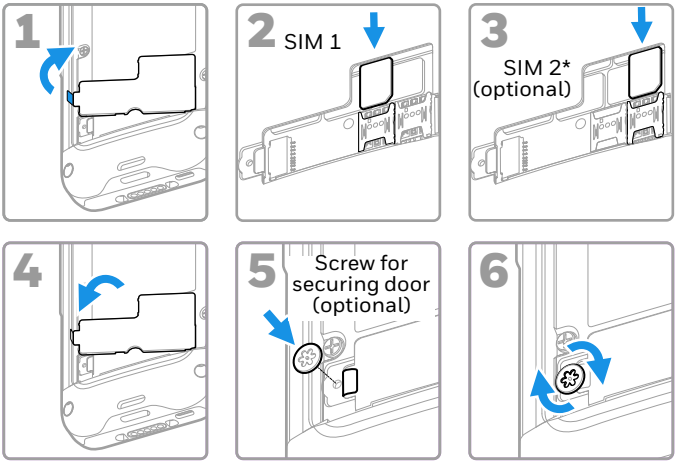

* SIM 2 availability and type (i.e., eSIM or nano-SIM socket) are model and model configuration dependent.

Note: *Always power Off the computer before attempting to install or remove a card.*

Install a microSD Card (Optional)

Note: *Format the microSD card before initial use.*

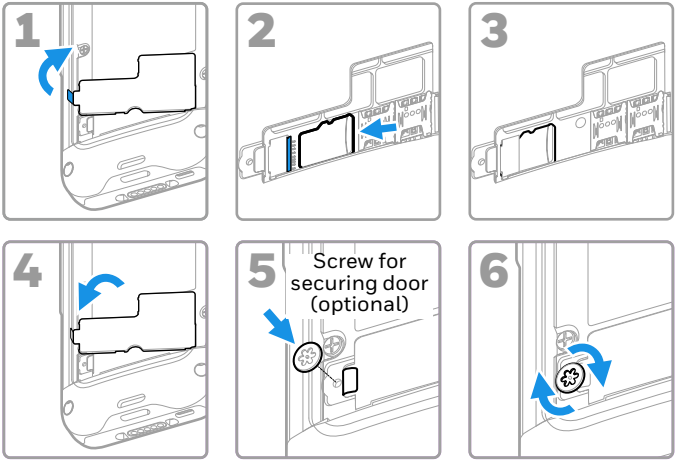

Note: *Always power Off the computer before attempting to install or remove a card.*

About the Battery

The mobile computer ships with a 3.87 VDC, 18.5 watt-hour Li-ion battery manufactured for Honeywell International Inc.

Before you attempt to use, charge or replace the battery in the device, carefully read all labels, markings and product documentation provided in the box or online at sps.honeywell.com. To learn more about Battery Maintenance for Portable Devices, go to honeywell.com/PSS-BatteryMaintenance.

Avant d'essayer d'utiliser, de charger ou de remplacer la batterie de l'appareil, lisez attentivement toutes les étiquettes, marquages et documentation du produit fournis dans la boîte ou en ligne à sps.honeywell.com. Pour en savoir plus sur l'Entretien de Batteries pour Appareils Portables, consultez-le honeywell.com/PSS-BatteryMaintenance.

We recommend use of Honeywell Li-ion battery packs. Use of any non-Honeywell battery may result in damage not covered by the warranty.

Nous recommandons l'utilisation de batteries Li-ion de la marque Honeywell. L'utilisation d'une batterie d'un autre fabricant est susceptible de provoquer des dommages non couverts par la garantie.

Ensure all components are dry prior to placing the battery in the computer. Mating wet components may cause damage not covered by the warranty.

Assurez-vous que tous les composants sont secs avant d'insérer la batterie dans l'ordinateur. L'insertion de composants humides risque de provoquer des dommages non couverts par la garantie.

Install the Battery

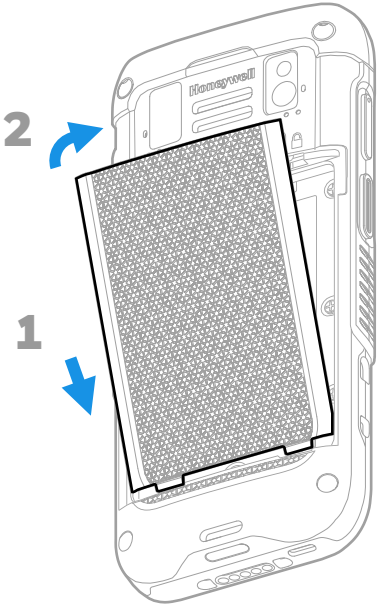

Install the Hand Strap

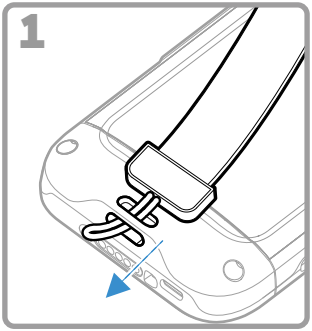

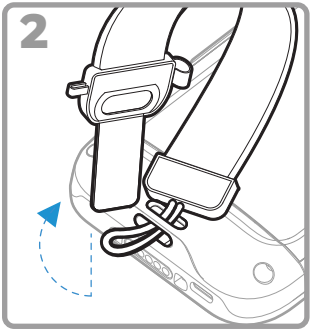

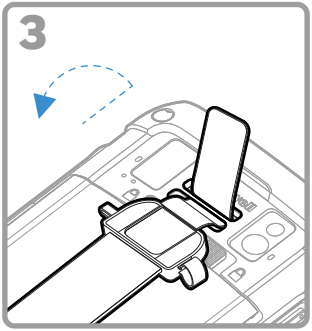

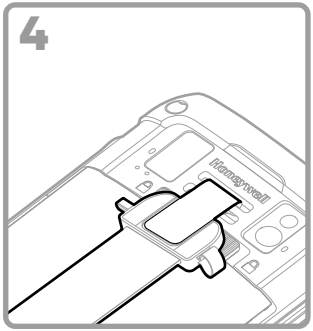

Charge the Mobile Computer

The mobile computer ships with a partially charged battery. Charge the battery with a CT40/CT45 Series charging device for a minimum of **3 hours**.

Note: *Using the computer while charging the battery increases the time required to reach a full charge. If the mobile computer is drawing more current than supplied by the charging source, charging will not take place.*

We recommend the use of Honeywell accessories and power adapters. Use of any non-Honeywell accessories or power adapters may cause damage not covered by the warranty.

Nous recommandons d'utiliser des accessoires et des adaptateurs secteur de marque Honeywell. L'utilisation de tout accessoire ou adaptateur secteur d'une autre marque est susceptible de provoquer des dommages non couverts par la garantie.

CT47 series mobile computers are designed for use with CT40/CT45 Series charging accessories. For more information, see the CT40/CT45 Series *Accessory Guide* available for download at sps.honeywell.com.

Ensure all components are dry prior to mating the computers and batteries with peripheral devices. Mating wet components may cause damage not covered by the warranty.

Assurez-vous que tous les composants sont secs avant de raccorder les ordinateurs et les batteries à des périphériques. L'insertion de composants humides risque de provoquer des dommages non couverts par la garantie.

About the USB Type C Connector

You can use the provided USB cable to charge the mobile computer from a host device (e.g., laptop or desktop computer). The connected host device must supply a minimum power output of 5V, 0.5A to the CT47 or the battery will not charge.

Turn Power On/Off

The first time you power On the computer, a Welcome screen appears. You can either scan a configuration barcode or use the Wizard to manually set up the computer. Once setup is complete, the Welcome screen no longer appears on startup and Provisioning mode is automatically turned off (disabled).

To turn the computer On:

- Press and hold the **Power** button for approximately 3 seconds, and then release.

To turn the computer Off:

1. Press and hold the **Power** button until the options menu appears.
2. Tap **Power off**.

Battery Replacement

Before removing the battery, always do one of the following:

- Power Off the computer.
- Place the unit in Swap Battery mode.

⚠ **Improper battery replacement or incompatible device usage may result in risk of burns, fire, explosion, or other hazard. Dispose of batteries according to local regulations.**

Un remplacement inadéquat de la batterie ou une utilisation incompatible de l'appareil peut présenter des risques de brulures, d'incendie, d'explosion ou d'autres dangers. Jetez les piles en lithium-ion conformément aux régulations locales.

Swap Battery Mode

Swap Battery mode places the computer in a low power state so that the battery can be removed for a short time.

To activate Swap Battery mode:

1. Press and hold the **Power** button until the options menu appears.
2. Tap **Swap Battery** and follow the on-screen instructions.
3. Once you replace the battery, press the **Power** button.

Screen Timeout

The screen timeout (sleep mode) automatically turns the touch panel display Off and locks the computer to save battery power when the computer is inactive for a programmed period of time.

- Press and release the **Power** button to wake the computer.

Adjust the Screen Timeout

To adjust the amount of time before the display sleeps after inactivity:

1. Swipe up on the touch screen.
2. Select **Settings** > **Display** > **Screen Timeout**.
3. Select the amount of time before the display goes to sleep.

About Security and the Screen Lock

A screen lock prevents unauthorized persons from accessing the computer. The default screen lock, swipe up to unlock the screen, does not provide protection against unauthorized access. You should enable one of the more advanced locking features (e.g., PIN, Pattern, Password, Fingerprint recognition, or Facial recognition). Honeywell recommends setting up a password lock as a minimum.

To learn more about available screen lock options, advanced face or fingerprint unlocking options, and how to enable these features on the computer, see the user guide.

Note: *When the Fingerprint unlock or Face unlock feature is enabled, you must still use a PIN, pattern, or password to unlock the computer after it turns On or restarts.*

About the Home Screen

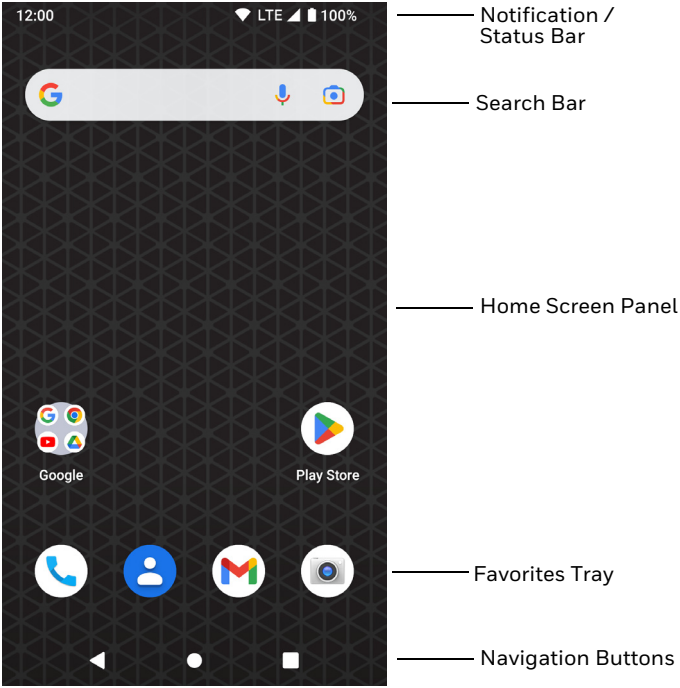

Navigation and Function Buttons

For button locations, see Computer Features on page 2.

Button	Description	
◀	Back	Return to the previous screen.
●	Home	Return to the Home screen.
■	Recent Apps	View and switch between recently used apps.
	Volume	Press the top of the button to raise the speaker volume. Press the bottom of button to lower the speaker volume.
	Scan	Press left or right Scan button to trigger the scanner.
	Push-to-Talk	Push-to-Talk button for use with apps that support the feature for voice over IP (VoIP) calls over Wi-Fi or cellular data network connections.
	Power	• Turn Power On/Off • Enter/Exit Screen Timeout (sleep). • Access options menu, including: Power off, Restart, and Swap Battery Mode.

About Provisioning Mode

After completing the out-of-box set up process, Provisioning mode is automatically turned Off. Scanning a barcode to install applications, certificates, configuration files, and licenses on the computer is restricted unless you enable Provisioning mode in the Settings app. To learn more, see the user guide.

Scan a Barcode with the Scan Demo

For optimum performance, avoid reflections by scanning the barcode at a slight angle.

1. Swipe up on the screen.
2. Select **Demos** > **Scan Demo**.
3. Point the computer at the barcode.
4. Touch **Scan** on the screen or press and hold any Scan button. Center the aiming beam over the barcode.

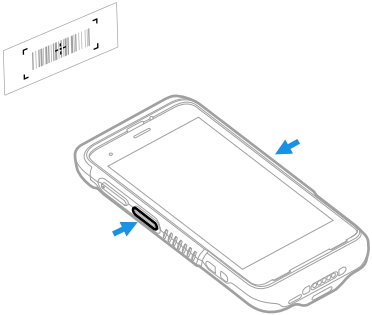

The decode results appear on the screen.

Note: *In the Scan Demo app, not all barcode symbologies are enabled by default. If a barcode does not scan, the correct symbology may not be enabled. To learn how to modify the default app settings, see the user guide.*

Sync Data

To move files between your CT47 and a computer:

1. Connect the CT47 to your computer using a USB charge/communication accessory.
2. On the CT47, swipe down from the top of the screen to see the notifications panel.
3. Tap the **Android System** notification twice to open the options menu.
4. Select either **File Transfer** or **PTP**.
5. Open the file browser on your computer.
6. Browse to the CT47. You can now copy, delete, and move files or folders between your computer and the CT47 as you would with any other storage drive (e.g., cut and paste or drag and drop).

Note: *When Provisioning mode is turned Off, some folders are hidden from view in the file browser.*

Restart the Mobile Computer

You may need to restart the mobile computer to correct conditions where an application stops responding to the system or the computer seems to be locked up.

1. Press and hold the **Power** button until the options menu appears.
2. Tap **Restart**.

To restart the computer if the touch panel display is unresponsive:

- Press and hold the **Power** button for approximately 8 seconds until the computer restarts.

Note: *To learn about advanced reset options, see the user guide.*

Support

To search our knowledge base for a solution or log into the Technical Support Portal and report a problem, go to honeywell.com/PSStechnicalsupport.

Documentation

Product documentation is available at sps.honeywell.com.

Limited Warranty

For warranty information, go to sps.honeywell.com and click **Support** > **Warranties**.

Patents

For patent information, see www.hsmpats.com.

Trademarks

Android is a trademark of Google LLC.

Other product names or marks mentioned in this document may be trademarks or registered trademarks of other companies and are property of their respective owners.

Disclaimer

Honeywell International Inc. (“HII”) reserves the right to make changes in specifications and other information contained in this document without prior notice, and the reader should in all cases consult HII to determine whether any such changes have been made. HII makes no representation or warranties regarding the information provided in this publication.

HII shall not be liable for technical or editorial errors or omissions contained herein; nor for incidental or consequential damages resulting from the furnishing, performance, or use of this material. HII disclaims all responsibility for the selection and use of software and/or hardware to achieve intended results.

This document contains proprietary information that is protected by copyright. All rights are reserved. No part of this document may be photocopied, reproduced, or translated into another language without the prior written consent of HII.

Copyright © 2022 Honeywell Group of Companies.
All rights reserved.