Honeywell

Thor™ VM3A

Vehicle-Mount Computer

Powered by Android™

Quick Start Guide

VM3A-EN-QS-01 Rev A
01/20

Out of the Box

Make sure your shipping box contains these items:

- Thor VM3A vehicle-mounted computer (Model VM3AL0N)
- Regulatory Sheet

If you ordered additional accessories for your computer, verify that they are also included with the order. Be sure to keep the original packaging in case you need to return the computer for service.

Computer Features

Front

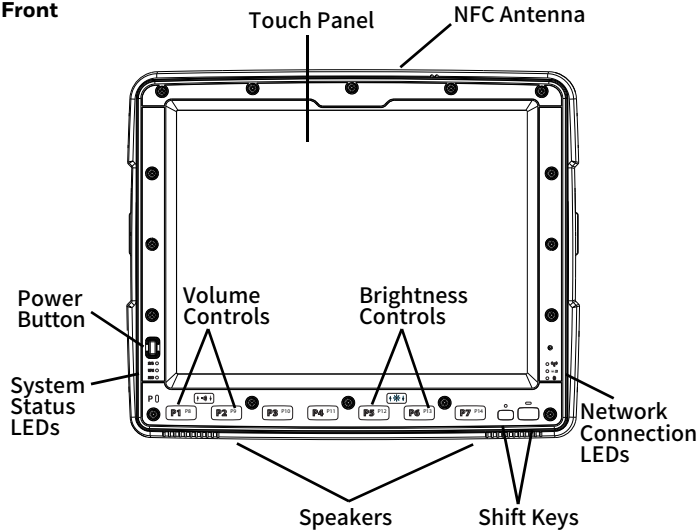

Back

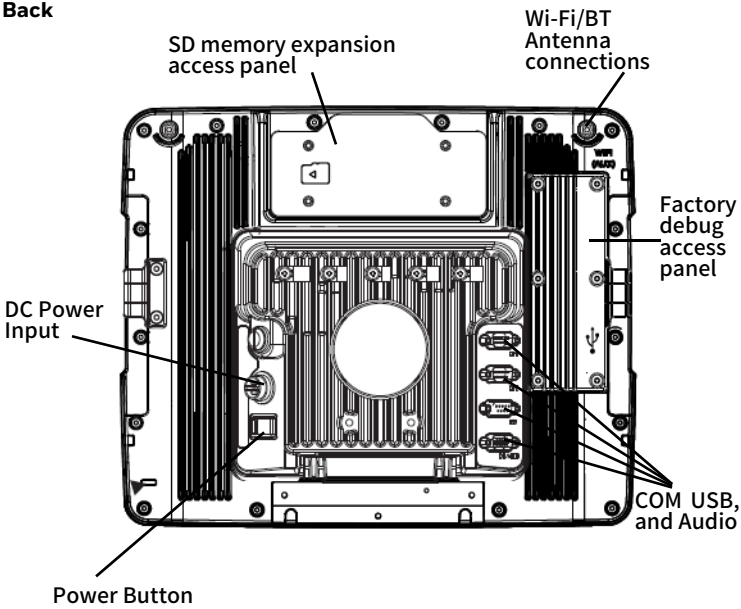
SD memory expansion access panel
Wi-Fi/BT Antenna connections
Factory debug access panel
DC Power Input
COM USB, and Audio
Power Button

Dock Features

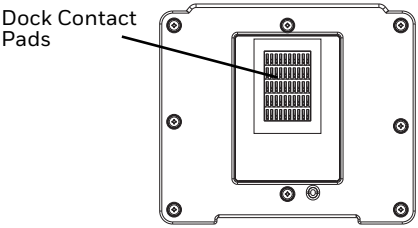

Standard Dock

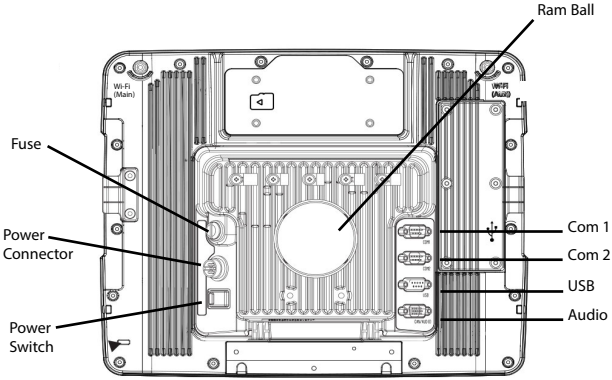

Mount to Vehicle

The Thor VM3A should be secured to an area in the vehicle where it:

- Does not obstruct the driver's vision or safe vehicle operation.
- Will be protected from rain or inclement weather.
- Will be protected from extremely high concentrations of dust or wind-blown debris.
- Can be easily accessed by a user seated in the driver's seat while the vehicle is not in operation.

To mount the VM3A using a RAM mount system:

1. Attach RAM base to vehicle (RAM ball, RAM Clamp, RAM Plate, etc.).

RAM Ball

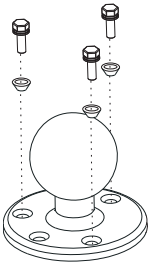

RAM Clamp

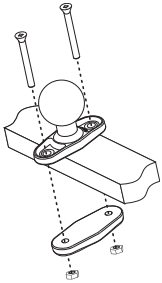

RAM Plate

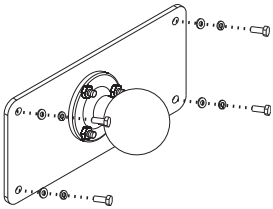

2. Attach RAM ball to the Smart Dock.

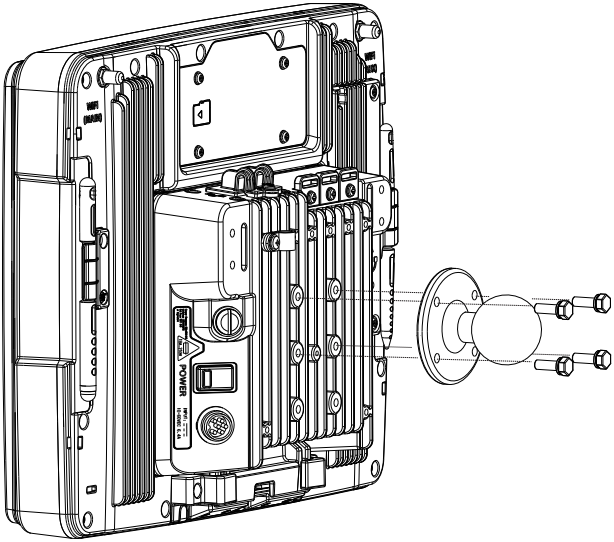

3. Attach VM3A assembly to RAM base using RAM arm and tighten knob on RAM arm.

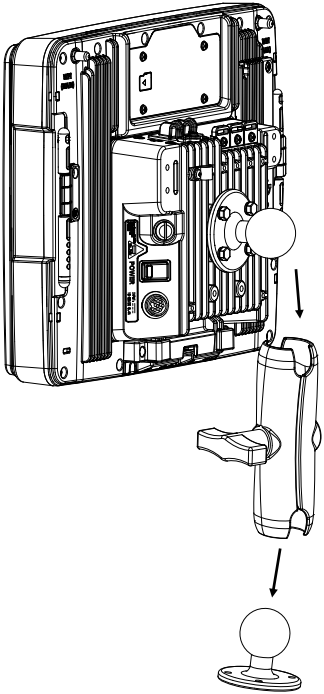

For more mounting details, refer to the user guide available at www.honeywellaidc.com.

Connecting the Power Cable for 12-48 VDC Vehicles (10-60 VDC Direct Connection)

Note: Refer to the Thor VM3A User Guide for other power connections, available at www.honeywellaidc.com.

Caution: For installation by trained service personnel only.

Warning: Fuse Requirements

For proper and safe installation, the input power cable must be connected to a fused circuit on the vehicle. If the supply connection is made directly to the battery, the fuse should be installed in the positive lead within 5 inches of the battery's positive (+) terminal. The fused circuit requires a maximum time delay (slow blow) fuse with a current rating as noted below.

- For 12VDC input, use a 10A slow blow fuse that has a DC voltage rating greater than 12VDC.
- For 24VDC input, use a 6A slow blow fuse that has a DC voltage rating greater than 24VDC.
- For 36VDC input, use a 4A slow blow fuse that has a DC voltage rating greater than 36VDC.
- For 48VDC input, use a 3A slow blow fuse that has a DC voltage rating greater than 48VDC.

Note: For North America, a UL Listed fuse must be used.

Power Cable Routing

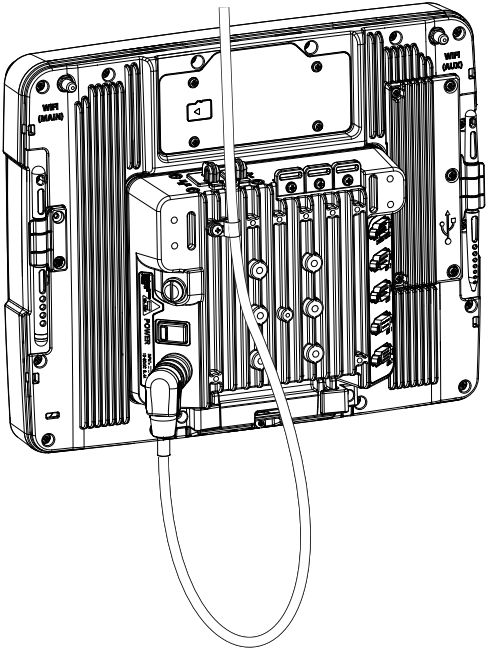

Power Cable Wiring Diagram with Right Angle and 6 Wires

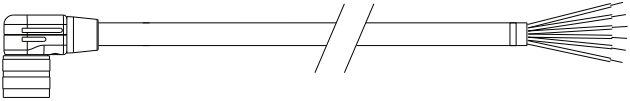

Twist the red and red/white wires together and twist the black and black/white wires together before connecting to vehicle power.

Connect the green wire to vehicle ground:

Caution: For battery powered vehicles, the green wire must be connected to the vehicle chassis ground.

Caution: For internal combustion engine powered vehicles, the green wire is connected to the vehicle chassis ground, which can also be battery negative.

Wire Color	Connection
Red	DC + (10-60 VDC)
Red/White	DC + (10-60 VDC)
Black	DC -
Black/White	DC -
Green	Ground
Blue	Ignition Sense Input (optional) Refer to the Thor VM3A User Guide, available at www.honeywellaidc.com, for further information about ignition control.

Vehicle 10-60 VDC Direct Power Connection

1. The VM3A must not be mounted in the dock. The power switch on the dock must be turned *Off*. The power cable must be UNPLUGGED from the dock.
2. Install the proper fuse based on the voltage source you will connect to. Connect to switched and fused power at terminal lug on a fuse or distribution box. Do not tap into existing wires. See page 9 for more information.
3. Use proper electrical and mechanical fastening means for terminating the cable. Properly sized “crimp” type electrical terminals are an accepted method of termination. Select electrical connectors sized for use with 20AWG (0.81mm^2) conductors.
4. Refer to the following wiring diagrams for wire colors and connections:
   - Ignition Control Wiring Diagram
     If switched vehicle power is available, the ignition wire can be connected. The VM3A will boot up when the vehicle ignition is turned on.

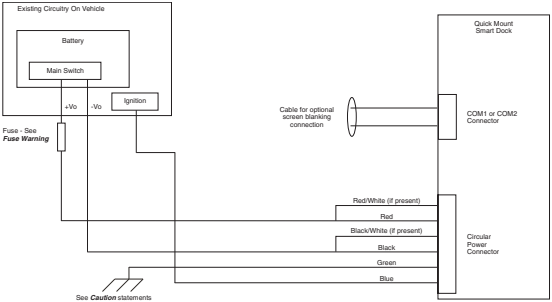

- Auto On Control and Manual Control Wiring Diagram
  Ignition wire must be left disconnected.

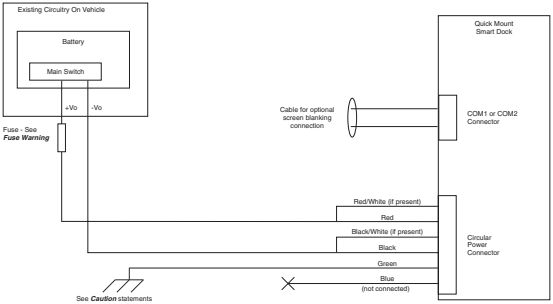

Caution: For battery powered vehicles:
Red and red/white wire twisted together to battery positive.
Black and black/white wire twisted together to battery negative.
Green wire connected to vehicle chassis ground.

Caution: For internal combustion engine powered vehicles:
Red and red/white wire twisted together to battery positive.
Black and black/white wire twisted together to battery negative.
Green wire connected to vehicle chassis ground, which can also be battery negative.

5. Route the cable the shortest way possible removing any leftover cable, making sure the cable does not interfere with safe operation and maintenance of the vehicle. The cable is rated for a maximum temperature of 221°F (105°C). The cable should be protected from surfaces that exceed this temperature, from physical damage from moving parts, and

from chemicals or oil that cause the insulation to deteriorate. Avoid sharp bends. The power cable is less flexible in low temperature environments.

6. Secure the cable to the vehicle structure at approximately one foot intervals, taking care not to over tighten, pinch conductors, or penetrate the insulation.
7. Connect the watertight connector end of the power cable to the dock power connector by aligning the connector pins to the power connector; push down on the watertight connector and twist it to fasten securely.
8. Secure the power cable to the VM3A using the strain relief cable clamps.
9. Place VM3A in the dock.
10. If using the Screen Blanking feature, install the screen blanking box or switch. (Refer to the Thor VM3A User Guide, available at www.honeywellaidc.com for further information about the Screen Blanking box.)
11. Press the power switch on the back of the dock.
12. Press the power button on the front of the VM3A.
13. Configure the Auto-ON behavior.

Restart the Computer

You may need to restart the computer to correct conditions where an application stops responding to the system or the computer seems to be locked up.

1. Press and hold the **Power** button until the options menu appears.
2. Select **Reboot** and then **OK**.

To restart the computer if the touch panel display is unresponsive:

- Press and hold the **Power** button for approximately 8 seconds until the computer restarts.

Note: To learn about advanced reset options, see the user guide.

Support

To search our knowledge base for a solution or to log into the Technical Support portal and report a problem, go to www.hsmcontactsupport.com.

User Documentation

For the user guide and other documentation, go to www.honeywellaidc.com.

Limited Warranty

For warranty information, go to www.honeywellaidc.com and click **Get Resources** > **Product Warranty**.

Patents

For patent information, see www.hsmpats.com.

Trademarks

Android is a trademark of Google LLC.

Disclaimer

Honeywell International Inc. (“HII”) reserves the right to make changes in specifications and other information contained in this document without prior notice, and the reader should in all cases consult HII to determine whether any such changes have been made. The information in this publication does not represent a commitment on the part of HII.

HII shall not be liable for technical or editorial errors or omissions contained herein; nor for incidental or consequential damages resulting from the furnishing, performance, or use of this material. HII disclaims all responsibility for the selection and use of software and/or hardware to achieve intended results.

This document contains proprietary information that is protected by copyright. All rights are reserved. No part of this document may be photocopied, reproduced, or translated into another language without the prior written consent of HII.

Copyright © 2019 Honeywell International Inc. All rights reserved.