Honeywell

Thor™ VM3 Vehicle-Mount Computer

with Microsoft® Windows® Embedded Standard 7
with Microsoft® Windows® 7 Professional

User's Guide

Disclaimer

Honeywell International Inc. (“HII”) reserves the right to make changes in specifications and other information contained in this document without prior notice, and the reader should in all cases consult HII to determine whether any such changes have been made. The information in this publication does not represent a commitment on the part of HII.

HII shall not be liable for technical or editorial errors or omissions contained herein; nor for incidental or consequential damages resulting from the furnishing, performance, or use of this material.

This document contains proprietary information that is protected by copyright. All rights are reserved. No part of this document may be photocopied, reproduced, or translated into another language without the prior written consent of HII.

© 2014-2015 Honeywell International Inc. All rights reserved.

Web Address: www.honeywellaidc.com

Trademarks

RFTerm is a trademark or registered trademark of EMS Technologies, Inc. in the United States and/or other countries.Microsoft® Windows, ActiveSync®, MSN, Outlook®, Windows Mobile®, the Windows logo, and Windows Media are registered trademarks or trademarks of Microsoft Corporation.

Intel® and Atom™ are trademarks or registered trademarks of Intel Corporation or its subsidiaries in the United States and other countries.

Summit Data Communications, the Laird Technologies Logo, the Summit logo, and “Connected. No Matter What” are trademarks of Laird Technologies, Inc.

Wi-Fi®, WMM®, Wi-Fi Mutlimedia™, Wi-Fi Protected Access®, WPA™, WPA2™ and the Wi-Fi CERTIFIED™ logo are trademarks or registered trademarks of Wi-Fi Alliance.

The Bluetooth® word mark and logos are owned by the Bluetooth SIG, Inc.

Symbol® is a registered trademark of Symbol Technologies. MOTOROLA, MOTO, MOTOROLA SOLUTIONS and the Stylized M Logo are trademarks or registered trademarks of Motorola Trademark Holdings, LLC and are used under license.

Freefloat, Link*One, Key*One and Access*One are trademarks of Freefloat, Mölndalsvägen 30B, SE-412 63Gothenburg, Sweden.

RAM® and RAM Mount™ are both trademarks of National Products Inc., 1205 S. Orr Street, Seattle, WA 98108.

Qualcomm® is a registered trademark of Qualcomm Incorporated. Gobi is a trademark of Qualcomm Incorporated.

Verizon® is a registered trademark of Verizon Trademark Services LLC.

T-MOBILE® is a registered trademark of Deutsche Telekom AG.

AT&T® is a registered trademark of AT&T Intellectual Property.

SD and SDHC are trademarks or registered trademarks of SD-3C, LLC in the United States, other countries or both.

SanDisk® and CompactFlash® are trademarks of SanDisk Corporation, registered in the United States and other countries.

Transcend® is a registered trademark of Transcend Information, Inc.

ATP is a trademark of ATP Electronics, Inc.

Acrobat® Reader © 2015 with express permission from Adobe Systems Incorporated.

Other product names or marks mentioned in this document may be trademarks or registered trademarks of other companies and are the property of their respective owners.

Patents

For patent information, please refer to www.honeywellaidc.com/patents.

Table of Contents

Chapter 1 - Thor VM3 Agency Information

FCC Part 15 Statement....1-1
FCC 5GHz Statement....1-1
EMC Directive Requirements....1-1
Canada, Industry Canada (IC) Notices....1-1
ANATEL (Brazil)....1-2
Vehicle Power Supply Connection Safety Statement....1-2
Li-Ion Battery....1-2
RF Safety Notice....1-2
Bluetooth....1-2
Honeywell Scanning & Mobility Product Environmental Information....1-2
CE Mark....1-2

Chapter 2 - Getting Started

Overview....2-1
About this Guide....2-1
Out of the Box....2-2
Initial Setup for Thor VM3....2-2
- Hardware Setup....2-2
- Software....2-2
  - Languages....2-2
  - First Boot....2-2
  - Software Setup....2-2

Quick Mount Smart Dock....2-2
Components....2-3
- Front View....2-3
- Back View with Quick Mount Smart Dock....2-3
- Access Panels....2-4

Backlights and Indicators....2-5
- Display Backlight....2-5
  - Power Management....2-5
  - Backlight Brightness....2-5
  - Screen Blanking....2-5
- Keypad Backlight....2-5
- Speaker Volume....2-5

Power Up....2-6
- Rebooting the Thor VM3....2-7
  - Restart....2-7

Tapping the Touch Screen with a Stylus....2-7
Setup Terminal Emulation Parameters....2-7
Cleaning the Touch Screen....2-8
Startup Help....2-8

Chapter 3 - Hardware Overview

System Hardware 3-1
802.11a/b/gWireless Client 3-1
Central Processing Unit 3-1
Input/Output Components 3-1
System Memory 3-1
Video Subsystem 3-1
Audio Interface 3-1
Card Slots 3-1
CompactFlash (CF) Slot 3-1
Secure Digital (SD) Slot 3-1
Bluetooth EZPair 3-1
WWAN 3-2
GPS 3-2
Power 3-2
Vehicle DC Power Supply 3-2
External AC Power Supply 3-2
Uninterruptible Power Supply 3-2
Safe Charging Temperature Range 3-2
Charging Timeout 3-3
Charging and Power Management 3-3
Backup Battery 3-3
Fuse 3-4
Power Management Modes 3-4
Power Controls 3-4
Power Switch 3-4
Power Button 3-4
External Connectors 3-4
Serial Connector (COM1 and COM2) 3-5
Screen Blanking 3-5
USB Connector(s) 3-5
CANbus / Audio Connector 3-6
Power Supply Connector 3-6
Antenna Connections 3-6
External Antenna Connector 3-7
Internal 802.11 Antenna 3-7
Vehicle Remote Antenna 3-7
Keyboard Options 3-8
Integrated Keypad 3-8
Keypad LEDs 3-8
95-Key USB Keyboard 3-8
Keyboard Backlight 3-8
USB Keyboard / Mouse 3-9
LED Functions 3-9
System LEDs 3-9
SYS (System Status) LED 3-9
UPS Status LED 3-10
Charge Level 3-10
Charging State 3-10

SSD (Solid State Drive) LED 3-10
Connection LEDs 3-11
WWAN LED 3-11
Wi-Fi LED 3-11
Bluetooth LED 3-11
Keyboard LEDs 3-12
Blue LED 3-12
Orange LED 3-12
Programmable LED 3-12
Display 3-12
Touch Screen 3-12
Touch Screen Defroster 3-12
Screen Blanking 3-13
Display Backlight Control 3-13

Chapter 1 - Vehicle Mounting and Accessory Installation

Introduction 1-15
Prepare for Vehicle Mounting 1-15
Quick Start 1-15
Maintenance - Vehicle Mounted Devices 1-15
Cleaning 1-16
Place Thor VM3 in the Dock 1-16
Dock I/O Pin Cover. 1-17
Padlock 1-17
Laptop Security Cable 1-17
Install RAM Mount 1-18
Components - RAM Mounting Kits 1-18
Procedure - RAM Mount Assembly 1-19
Torque Measurement 1-19
Step 1a – Attach RAM Ball to Vehicle 1-19
Mounting Dimensions 1-19
Step 1b – Mount RAM Clamp to Vehicle 1-20
Mounting Dimensions 1-20
Step 1c – Attach RAM Plate to Vehicle and Attach RAM Ball 1-21
Mounting Dimensions 1-21
Step 2 – Attach RAM Mount Ball to the Thor VM3 Quick Mount Smart Dock 1-22
Step 3 – Attach Thor VM3 Assembly to RAM Mount 1-22
Step 4 – Place the Thor VM3 into the Dock 1-22
Connect Cables 1-23
Strain Relief Cable Clamps 1-23
Connect Power 1-24
Power Cable Cautions 1-24
12-48 VDC Vehicles (10-60 VDC Direct Connection) 1-25
Power Cable Identification 1-25
Vehicle 10-60VDC Direct Power Connection 1-25
Ignition Control Wiring Diagram 1-27
Auto-On Control Wiring Diagram 1-28
Manual Control Wiring Diagram 1-29

60-144 VDC Vehicles (50-150 VDC Power Supply, Screws on Side of Lid) 1-29
Power Cable Identification 1-30
Vehicle 50-150VDC Power Connection 1-30
Wiring Diagram 1-32
60-144 VDC Vehicles (50-150 VDC Power Supply, Screws on Top of Lid) 1-33
Power Cable Identification 1-33
Vehicle 50-150VDC Power Connection 1-34
Wiring Diagram 1-35
VX6 / VX7 Adapter Cable 1-36
Connect to VX6 / VX7 Power Cable 1-36
Thor VX8 / Thor VX9 Adapter Cable 1-37
Connect to Thor VX8 / VX9 Power Cable 1-37
Screen Blanking 1-38
Screen Blanking Cable 1-38
Honeywell Screen Blanking Box Cable 1-38
User-Supplied Cable 1-39
Screen Blanking Box 1-39
Screen Blanking with Switch 1-40
External AC/DC Power Supply 1-41
Connect External Power Supply 1-41
Connect USB Host 1-42
Connect USB Client 1-42
Connect Serial Device 1-42
Connect a Tethered Scanner 1-42
Connect Headset Cable 1-43
Adjust Headset / Microphone and Secure Cable 1-43
Under Clothing 1-44
Over Clothing 1-44
Connect CANbus Cable 1-44
Install Remote Antenna 1-45
802.11 Remote Mount Antenna 1-45
Components and Mounting Diagram 1-45
Typical Installation 1-46
Mounting Instructions 1-46
WAN Remote Mount Antenna 1-47
GPS Remote Mount Antenna 1-47
Apply Touch Screen Protective Film 1-48
Installation 1-48

Chapter 2 - Software

Microsoft Windows Setup and Configuration 2-1
Drive C Folder Structure 2-1
Software Loaded on Drive C 2-1
Microsoft Windows 2-1
Device Drivers 2-1
Radio Software 2-1
Touch Screen Software 2-1
RFTerm 2-1

Summit Client Utility 2-1
Freefloat Link*One Wedge 2-2
Freefloat Access*One TE (Optional) 2-2
Control Panel 2-3
About 2-3
Software 2-3
Firmware Versions 2-3
Language 2-3
Versions 2-3
Versions Tab and the Registry 2-3
Network IP 2-3
MAC Address 2-4
Bluetooth 2-5
Bluetooth Devices 2-6
Discover 2-6
Stop Button 2-6
Bluetooth Device List 2-7
Clear Button 2-7
Bluetooth Device Menu 2-7
Right-Click Menu Options 2-7
Bluetooth Device Properties 2-8
Settings 2-8
Turn Off Bluetooth 2-8
Options 2-8
Reconnect 2-10
Options 2-10
About 2-11
Using Bluetooth 2-12
Bluetooth Devices Display - Before Discovering Devices 2-12
Initial Configuration 2-12
Subsequent Use 2-12
Bluetooth Indicators 2-13
Bluetooth Bar Code Reader Setup 2-13
Thor VM3 with Label 2-14
Thor VM3 without Label 2-14
Bluetooth Beep and LED Indications 2-15
Bluetooth Printer Setup 2-15
Easy Pairing and Auto-Reconnect 2-15
Display 2-16
Power Options 2-17
Select a Power Scheme 2-17
Power Schemes 2-17
View UPS Battery Status 2-18
Power Meter 2-18
Configure Power Button Behavior 2-18
Advanced 2-18
Hibernate 2-19

Enable Hibernation 2-19
Screen Control 2-20
Screen Blanking 2-21
Screen Rotation 2-22
Sounds 2-22
User Accounts 2-22
Wi-Fi 2-23
Bar Code Readers 2-24
Scanner Wedge 2-24
Touch Screen Calibration 2-24
BIOS 2-25
Accessing the BIOS Setup 2-25
Boot Order 2-25
Exiting BIOS Setup 2-25
Thor VM3 Recovery DVD 2-25
Windows Embedded Standard 7 and Windows 7 Professional: 2-26
Using Configuration Cloning Utility GUI 2-26

Chapter 3 - Wireless Network Connections

Network Connections Control Panel 3-1
Summit Wireless Network Configuration 3-1
Important Notes 3-1
Summit Client Utility 3-1
Summit Tray Icon 3-1
Wireless Zero Config Utility 3-2
To Switch Control to the Wireless Zero Config Utility 3-2
To Switch Control to SCU 3-2
Main 3-3
Admin Login 3-3
Profile 3-5
Buttons 3-5
Profile Parameters 3-6
Status 3-8
Diags 3-9
Global 3-10
Custom Parameter Option 3-11
Global Parameters 3-11
Logon Options 3-13
Single Signon 3-14
Pre-Logon Connection 3-14
Sign-On vs. Stored Credentials 3-15
To Use Stored Credentials 3-15
To Use Sign On Screen 3-16
To Use Windows Username and Password 3-16
Windows Certificate Store vs. Certs Path 3-17
User Certificates 3-17
Root CA Certificates 3-17
Certs Path 3-17

Windows Certificate Store 3-17
Configuring the Profile 3-18
No Security 3-19
WEP 3-20
LEAP 3-21
PEAP/MSCHAP 3-22
PEAP/GTC 3-24
WPA/LEAP 3-26
EAP-FAST 3-27
EAP-TLS 3-29
WPA PSK 3-31
Certificates 3-32
Generate a Root CA Certificate 3-32
Install a Root CA Certificate 3-34
Generate a User Certificate 3-35
Exporting a User Certificate 3-36
Install a User Certificate 3-37
Manually Initiate Certificate Installation 3-38
OneClick Internet 3-39
Preparing for Initial Use on the Thor VM3 3-39
Install SIM Card 3-39
Load Firmware 3-39
Activation 3-39
Using OneClick Internet 3-41
Connection Management 3-41
Menu Buttons 3-42
Radio Button 3-42
Statistics Button 3-42
Update Button 3-42
Help Button 3-42
Settings Button 3-43
Profile 3-43
Buttons 3-44
Parameters 3-44
Network 3-45
Network with SIM Card 3-45
CDMA Network 3-46
History 3-46
PIN 3-47
Activate/Deactivate PIN 3-47
Change PIN 3-47
Info 3-48
Firmware 3-48
Activation on CDMA 3-49
General 3-49
Application 3-50
Application Buttons 3-50
SMS 3-50

Folder 3-51
Settings 3-52
New SMS 3-52
Reply 3-52
Forward 3-52
Move SMS.. 3-52
Delete 3-52
Send/Receive 3-52
Addresses 3-53
Web Browser 3-53
Email 3-53
GPS 3-53
About 3-54
System Requirements 3-54
Supported Languages 3-54
Installing or Upgrading OneClick Internet 3-54
Installation 3-54
OneClick Internet Connection Manager 3-56
Connection Management 3-57
Information Buttons 3-58

Chapter 4 - Key Maps

Integrated Keypad 4-1
External 21-Key Keyboard 4-2
External 95-Key Keyboard 4-2

Chapter 5 - Specifications and Reference Material

Technical Specifications 5-1
Thor VM3 5-1
Smart Dock 5-2
Enhanced Smart Dock 5-2
Dimensions 5-3
Thor VM3 5-3
Smart Dock 5-3
Environmental Specifications 5-4
Thor VM1 and Smart Dock 5-4
Network Card Specifications 5-4
?? 802.11a/b/g/n 5-4
Bluetooth 5-4
WWAN 5-4
Port and Connector Pinouts 5-5
Power Supply Connector 5-5
COM1 and COM2 Connector 5-5
USB Connector 5-6
USB Y Cable 5-6
D9 Male Connector 5-6
USB Host Connector 5-6

USB Client Connector 5-6
USB Connector2 5-7
USB Y Cable 5-8
D15 Male Connector 5-8
USB Host Connector 5-8
USB Host Connector 5-8
CANbus / Audio Connector 5-9
Headset Adapter Cable 5-9
D15 Female Connector 5-9
Quick Connect Headset Connector 5-9
CANbus Y Cable 5-10
D15 Female Connector 5-10
9-Pin J1939 (Deutsch) Connectors 5-10
Hat Encoding 5-11

Chapter 6 - Customer Support

Product Service and Repair 6-1
Technical Assistance 6-1
Limited Warranty 6-1

1

Thor VM3 Agency Information

Thor VM3 mobile computers meet or exceed the requirements of all applicable standards organizations for safe operation. However as with any electrical equipment, the best way to ensure safe operation is to operate them according to the agency guidelines that follow. Read these guidelines before using your Thor VM3.

This documentation is relevant for the following Thor models: VM3.

FCC Part 15 Statement

This device complies with FCC Rules, part 15 [and with RSS-210 of Industry Canada]. Operation is subject to the following two conditions:

1. This device may not cause harmful interference, and
2. This device must accept any interference received, including interference that may cause undesired operation.

NOTE - This equipment has been tested and found to comply with the limits for a Class A digital device, pursuant to Part 15 of the FCC Rules. These limits are designed to provide reasonable protection against harmful interference when the equipment is operated in a commercial environment. This equipment generates, uses, and can radiate radio frequency energy and, if not installed and used in accordance with the instruction manual, may cause harmful interference to radio communications. Operation of this equipment in a residential area is likely to cause harmful interference in which case the user will be required to correct the interference at his own expense.

Caution - Changes or modifications made to this equipment not expressly approved by Honeywell may void the FCC authorization to operate this equipment.

FCC 5GHz Statement

For the band 5600-5650 MHz, no operation is permitted.

High-power radar is allocated as the primary user of the 5.25- to 5.35-GHz and 5.65- to 5.85-GHz bands. These radar stations can cause interference with and/or damage to this device.

EMC Directive Requirements

This is a Class A product. In a domestic environment this product may cause radio interference in which case the user may be required to take adequate measures.

Canada, Industry Canada (IC) Notices

This Class A digital apparatus complies with Canadian RSS-GEN issue 3:2010 and RSS-210 issue 8:2010.

Operation is subject to the following two conditions: (1) this device may not cause interference, and (2) this device must accept any interference, including interference that may cause undesired operation of the device.

Radio Frequency (RF) Exposure Information

The radiated output power of the Honeywell Thor VM3 is below the Industry Canada (IC) radio frequency exposure limits. The Honeywell Thor VM3 should be used in such a manner such that the potential for human contact during normal operation is minimized.

This device has been certified for use in Canada. Status of the listing in the Industry Canada's REL (Radio Equipment List) can be found at the following web address: Additional Canadian information on RF exposure also can be found at the following web address: Canada, avis d'Industry Canada (IC)

Cet appareil numérique de classe A est conforme aux normes canadiennes RSS-GEN numéro 3:2010 et RSS-210 numéro 8:2010.

Son fonctionnement est soumis aux deux conditions suivantes : (1) cet appareil ne doit pas causer d'interférence et (2) cet appareil doit accepter toute interférence, notamment les interférences qui peuvent affecter son fonctionnement.

Informations concernant l'exposition aux fréquences radio (RF)

La puissance de sortie émise par de le Honeywell Thor VM3 est inférieure à la limite d'exposition aux fréquences radio d'Industry Canada (IC). Utilisez le Honeywell Thor VM3 de façon à minimiser les contacts humains lors du fonctionnement normal.

Ce périphérique est homologué pour l'utilisation au Canada. Pour consulter l'entrée correspondant à l'appareil dans la liste d'équipement radio (REL - Radio Equipment List) d'Industry Canada rendez-vous sur: Pour des informations supplémentaires concernant l'exposition aux RF au Canada rendez-vous sur : ANATEL (Brazil)

Este equipamento opera em caráter secundário, isto é, não tem direito a proteção contra interferência prejudicial, mesmo de estações do mesmo tipo, e não causar interferência a sistema operando em caráter primário.

ANATEL (Brazil)

Este equipamento opera em caráter secundário, isto é, não tem direito a proteção contra interferência prejudicial, mesmo de estações do mesmo tipo, e não causar interferência a sistema operando em caráter primário.

Vehicle Power Supply Connection Safety Statement

Note: For North America, a UL Listed fuse is to be used

For proper and safe installation, the input power cable must be connected to a fused circuit on the vehicle. If the supply connection is made directly to the battery, the fuse should be installed in the positive lead within 5 inches (12.7 cm) of the battery's positive (+) terminal. Use VM3055FUSEKIT to install this fuse or use equivalent 20A fast blow fuse.

Li-Ion Battery

When disposing of the Thor VM3 UPS battery, the following precautions should be observed: The battery should be disposed of properly. The battery should not be disassembled or crushed. The battery should not be heated above 212°F (100°C) or incinerated.

Safety requirements restrict the temperature at which the Li-Ion UPS battery can be charged. Charging is disabled if the ambient temperature is outside of the 0ºC to 35ºC safe charging range. In order to maintain UPS charge the Thor VM3 should have power applied while the unit is within the safe charging range for at least an hour each day.

RF Safety Notice

This device is intended to transmit RF energy. For protection against RF exposure to humans and in accordance with FCC rules and Industry Canada rules, this transmitter should be installed such that a minimum separation distance of at least 20 cm (7.8 in.) is maintained between the antenna and the general population. .

Bluetooth

Bluetooth® Class II

Honeywell Scanning & Mobility Product Environmental Information

Refer to www.honeywellaidc.com/environmental for the RoHS / REACH / WEEE information.

CE Mark

The CE marking on the product indicates that this device is in conformity with the following directives:

- 1995/5/EC R&TTE
- 2011/65/EU RoHS (Recast)

In addition, complies to 2006/95/EC Low Voltage Directive, when shipped with recommended power supply.

European contact:

Hand Held Products Europe BV
Nijverheidsweg 9-13
5627 BT Eindhoven

The Netherlands

Honeywell shall not be liable for use of our product with equipment (i.e., power supplies, personal computers, etc.) that is not CE marked and does not comply with the Low Voltage Directive.

WWAN is not available in Singapore.

2 Getting Started

Overview

The Thor VM3 Vehicle Mount Computer (VMC) is a rugged, vehicle mounted computer running a Microsoft® Windows® Embedded Standard 7 (32-bit) or Windows® 7 Professional (64-bit) or Windows® operating system and capable of wireless data communications from a fork-lift truck or any properly configured vehicle. Wireless communications are supported over a 802.11 WLAN network and, optionally, over a WWAN network. The Bluetooth® module supports Bluetooth printers and scanners.

***CAUTION** - Before shipping the Thor VM3, be sure to* *Disconnect UPS Battery* (page 1-54) *.*

The Thor VM3 is designed for use with a vehicle Quick Mount Smart Dock. The dock installs in the vehicle and connects to vehicle power. The dock provides conditioned input power for the Thor VM3. Peripheral connections are on the dock. The Thor VM3 is designed to easily be removed from the dock with a latch on the lower rear of the Thor VM3 housing. Since the dock remains attached to the vehicle, the Thor VM3 computer can easily be moved from one vehicle equipped with a dock to another vehicle equipped with a dock.

The Thor VM3 contains a UPS battery which, when fully charged, can power the Thor VM3 for a minimum of 30 minutes. This can be when the Thor VM3 is not attached to a Quick Mount Smart Dock or when the Thor VM3 is attached to a dock but the vehicle power is interrupted, such as when the vehicle battery is being changed.

The Thor VM3 can be used with or without an external keyboard. There are 7 programmable keys (P1-P7) on the front bezel and, when used with the Orange modifier key, provide 7 additional programmable keys (P8-P14).

Contact Technical Assistance (page 6-1) for information on the latest upgrades for your Thor VM3.

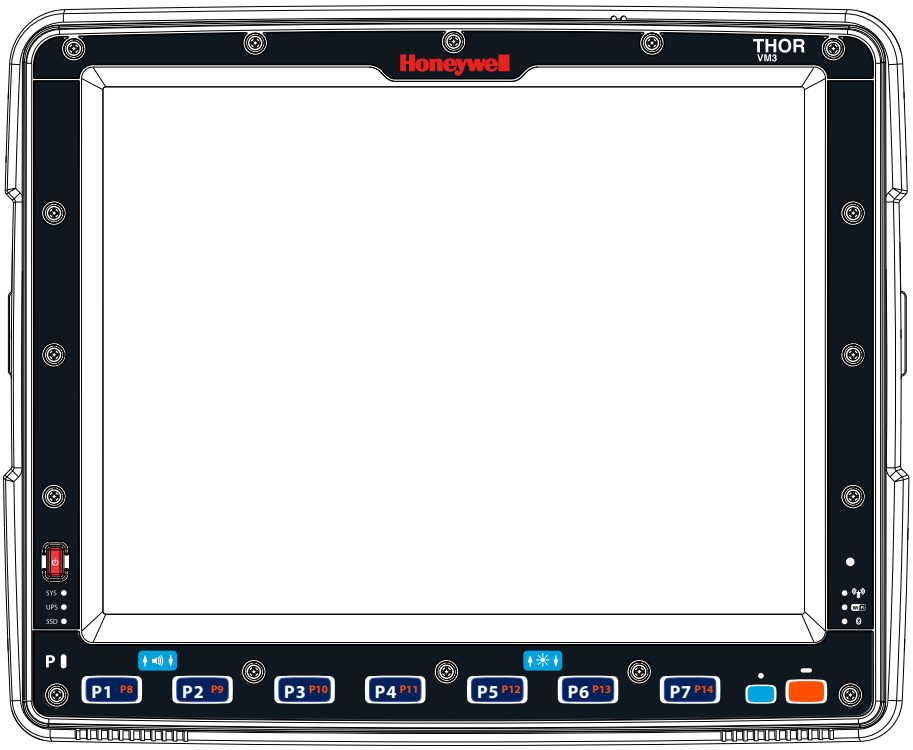

About this Guide

This user's guide has been developed for a Thor VM3 with a Microsoft® Windows® 7 Professional or Windows® Embedded Standard 7 operating system.

Out of the Box

The following items may be packaged separately:

- Thor VM3
- Quick Mount Smart Dock (includes 10-60VDC power cable)
- RAM or U-Bracket vehicle mount kit

If you ordered additional accessories for the Thor VM3, verify they are also included with the order. Keep the original packaging material in the event the Thor VM3 should need to be returned for service. For details, see Product Service and Repair (page 6-1).

Initial Setup for Thor VM3

This page lists a quick outline of the steps you might take when setting up a new Thor VM3. More instruction for each step is listed later in this guide.

Contact Technical Assistance (page 6-1) if you need additional help.

Hardware Setup

1. Install RAM Mount (page 1-18) or Install U Bracket Mount (page 1-23) to the vehicle.
2. Place Thor VM3 in the Dock (page 1-16).
3. Connect Cables (page 1-23) for any peripherals.
4. Connect Power (page 1-24).
5. Secure all cables in Strain Relief Cable Clamps (page 1-23).
6. Press the Power Switch (page 3-4) on the dock to the on position.
7. Press the Power Button (page 3-4) on the Thor VM3.

Software

Languages

First Boot

When a new Thor VM3 starts up a EULA (End User License Agreement) may be displayed on the touch screen. It remains on the screen until the Accept or Decline button is tapped with a stylus.

Tap the **Accept** button to accept the EULA terms and the Thor VM3 continues the startup process. The EULA is not presented to the user again.

Tap the **Decline** button to decline the EULA and the Thor VM3 reboots. It will continue to reboot until the **Accept** button is tapped with the stylus.

Software Setup

Hardware setup should be completed before starting software setup.

Quick Mount Smart Dock

The Thor VM3 assembly consists of two parts, the Thor VM3 computer and the Quick Mount Smart Dock.

The Thor VM3 contains an internal UPS battery that, once fully charged, powers the Thor VM3 for a minimum of 30 minutes when the unit is not mounted in the dock.

The dock provides:

- A mount for the Thor VM3 computer. The dock attaches to a vehicle via a RAM or U-bracket mount or to a RAM table stand for use in an office environment.
- Conditioned power for the Thor VM3. The dock accepts 10-60VDC power input directly or 50-150VDC power input with a DC/DC converter.
- COM1 and COM2 serial connections for a tethered scanner, printer, PC connection, etc.
- USB host connection via an adapter cable.

- CANbus connection via an adapter cable.
- Headset connection via an adapter cable. When a headset is not attached, the microphone and speakers on the Thor VM3 are active.
- Strain relief cable mounts.
- Mobility of the Thor VM3, since the dock remains attached to the vehicle the Thor VM3 computer can easily be moved from one vehicle equipped with a dock to another.

External antenna connectors may be present on the back of the Thor VM3. The connectors may include:

- 802.11 antenna connectors, used when the Thor VM3 is not equipped with internal antennas.
- External GPS antenna connector, when the Thor VM3 is equipped with GPS.
- External WWAN antenna connectors, when the Thor VM3 is equipped with WWAN. Optional WWAN radio (available in North America, Europe, New Zealand, and Australia only).

Components

Front View

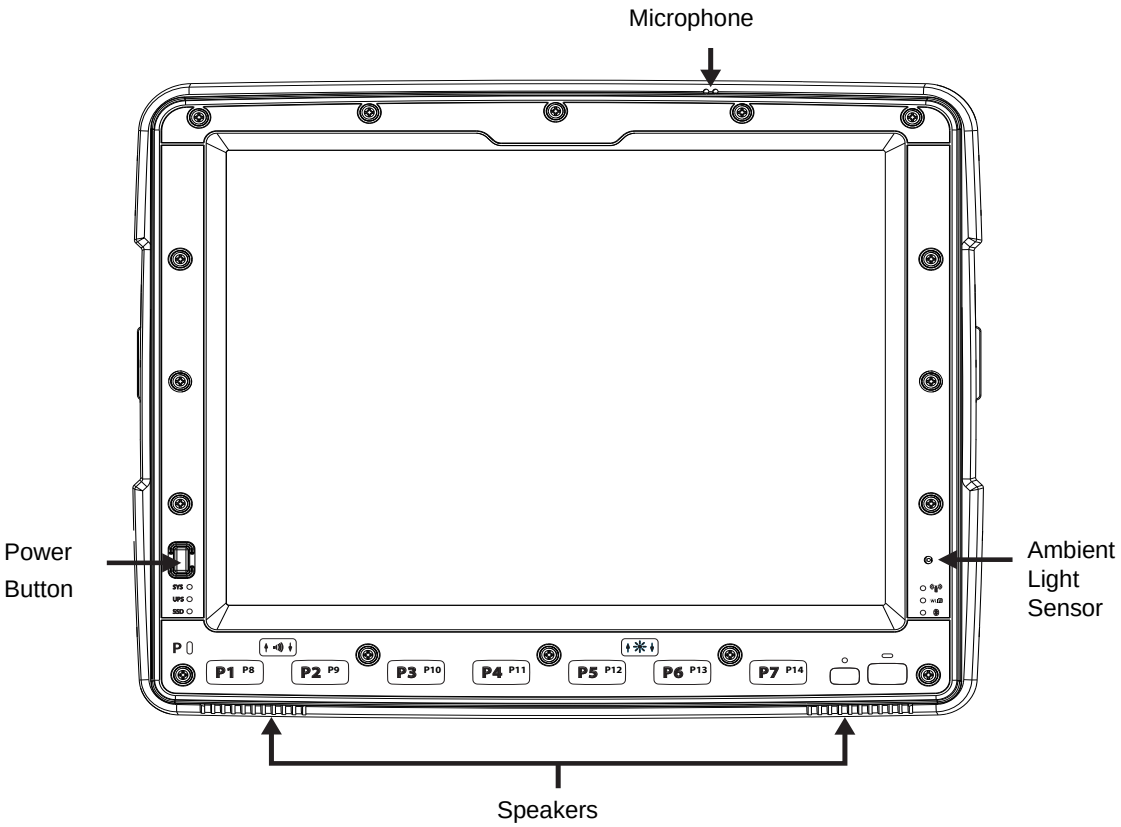

Back View with Quick Mount Smart Dock

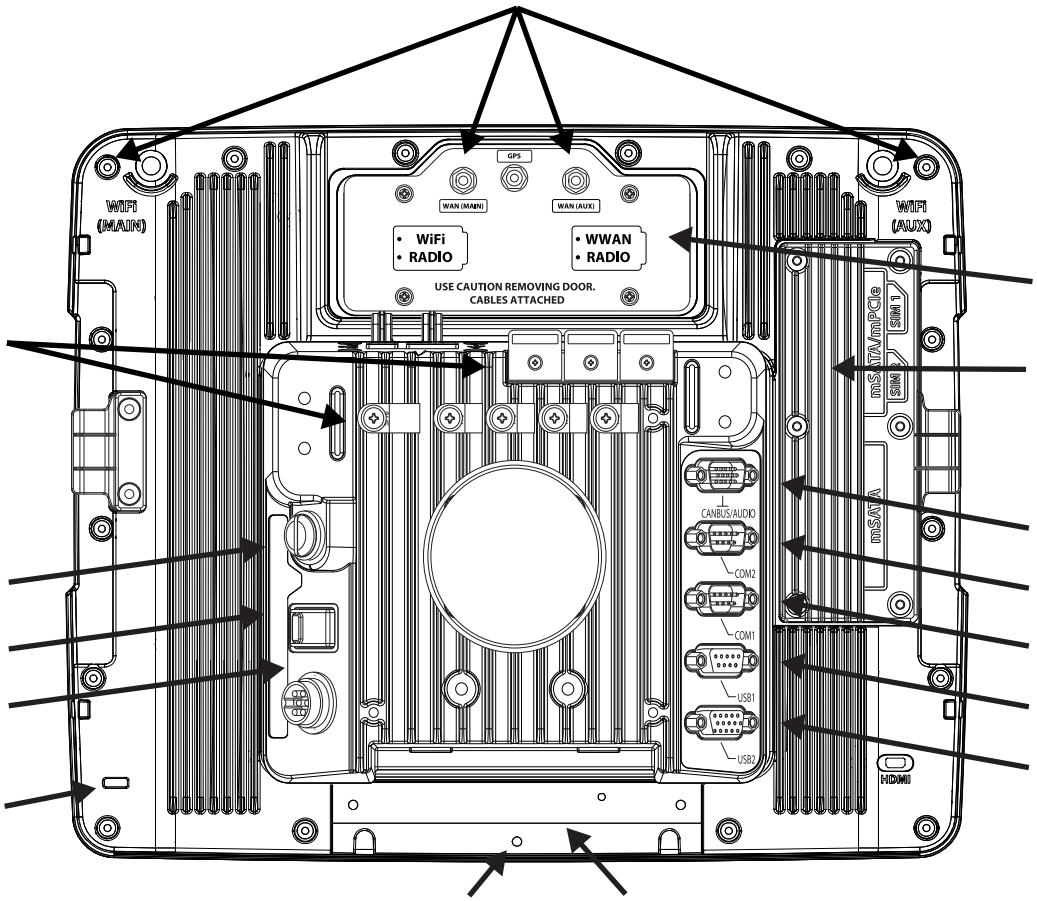

Access Panels

Backlights and Indicators

Display Backlight

There are several configuration options for the Thor VM3 display backlight:

Power Management

The display backlight is controlled by power management. When the user activity timer expires, the display backlight is turned off. Timeouts can be set for the available power management schemes.

See Power Options (page 2-17) for configuration options.

Backlight Brightness

The intensity of the display backlight can be manually configured:

1. Press the **Blue** key to enter Blue mode
2.
3. Press the **P5** key to increase backlight brightness or the **P6** key to decrease backlight brightness.
4. Press the **Blue** key to exit Blue mode.

Refer to the Screen Control (page 2-20) panel for the current display brightness level.

Screen Blanking

The Thor VM3 can be configured to blank (blackout) the display while the vehicle is in motion.

Refer to the Screen Control (page 2-20) panel for information.

Keypad Backlight

By default, the integrated keypad backlight follows the display backlight. The integrated keypad backlight can be disabled.

To change this behavior, see the Options (see page 5-23) control panel.

The external USB keyboard backlight is manually controlled.

Speaker Volume

The speaker volume can be adjusted via the Thor VM3 keypad:

1. Press the **Blue** key to enter Blue mode
2. Press the **P1** key to increase speaker volume or the **P2** key to decrease speaker volume.
3. Press the **Blue** key to exit Blue mode.

The current volume level can be viewed on the Sounds (page 2-22) control panel or via the system tray speaker icon. These items can also be used to adjust speaker volume

Power Up

If a USB drive, such as a thumb drive is attached to the Thor VM3, the device attempts to boot from the USB drive and cannot. Please remove the USB drive and power up the Thor VM3 again.

The Quick Mount Smart Dock has a power switch on the back.

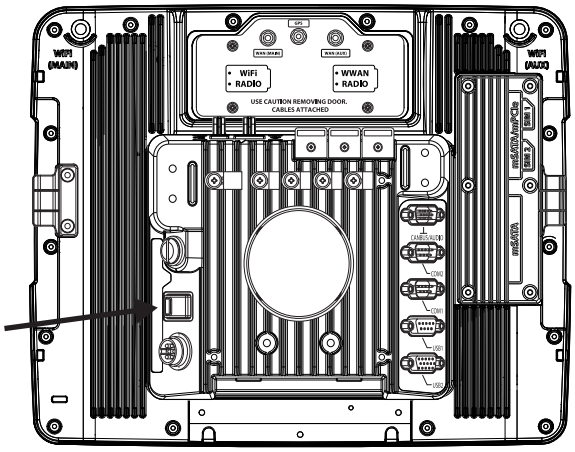

The “On” side of this rocker switch has a raised bump to allow the state of the switch to be determined when the switch may not be easily viewed, for example, after the dock is mounted in a vehicle.

After external power has been connected and the Thor VM3 has been mounted in the dock, press the side of the power switch with the raised bump to pass power from the dock to the Thor VM3.

Next locate the power button on the front of the Thor VM3.

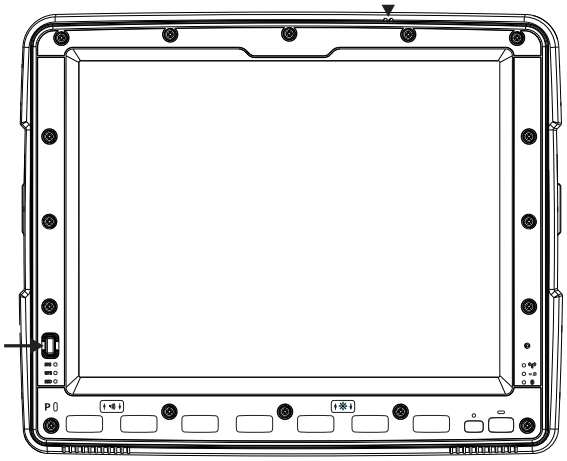

Press the power button to turn the Thor VM3 on. When the Windows desktop is displayed or an application begins, the power up sequence is complete.

See Power Controls (see page 3-4) for more information.

Rebooting the Thor VM3

If a USB drive, such as a thumb drive is attached to the Thor VM3, the device attempts to boot from the USB drive:
- If the USB drive contains a bootable sector, the Thor VM3 boots from the USB drive.
- If the USB drive does not contain a bootable sector, the Thor VM3 does not boot. Remove the USB drive and boot the Thor VM3 again.

•

Restart

Restart performs a controlled shutdown of the Thor VM3 and then restarts the device.

- Use the **Ctrl** + **Alt** + **Del** keypress sequence to start the task manager. Tap the **Shut Down** button and select **Restart** from the pull-down list. Tap the **OK** button to restart the Thor VM3.
- Select **Start > Shut Down > Restart** and tap OK to restart the Thor VM3

Tapping the Touch Screen with a Stylus

Note: Always use the point of the stylus for tapping or making strokes on the touch screen.

Never use an actual pen, pencil, or sharp/abrasive object to write on the touch screen.

Hold the stylus as if it were a pen or pencil. Touch an element on the screen with the tip of the stylus then remove the stylus from the screen.

Firmly press the stylus into the stylus holder when the stylus is not in use.

Using a stylus is similar to moving the mouse pointer then left-clicking icons on a desktop computer screen.

Using the stylus to tap icons on the touch screen is the basic action that can:

- Open applications
- Choose menu commands
- Select options in dialog boxes or drop-down boxes
- Drag the slider in a scroll bar
- Select text by dragging the stylus across the text
- Place the cursor in a text box prior to typing in data
- Place the cursor in a text box prior to retrieving data using a scanner/imager.

A right click is generated by tapping the mouse icon , usually located in the upper right hand corner of the screen. After tapping, the mouse icon highlights the right button. The next touch screen tap is treated as a right click. The mouse icon returns to the left button highlighted so subsequent taps are treated as left clicks.

Note: If the mouse icon is not displayed, this feature can be enabled by tapping the PenMount icon pm *in the System Tray. From the menu that pops up, tap the **Right Button** to enable the mouse icon. When this option is enabled, a checkmark is displayed in the menu.*

A stylus replacement kit is available.

When a dialog box is too large for the display, tap and drag the dialog box up or down or from side to side to view the remainder of the dialog box.

Setup Terminal Emulation Parameters

Note: The instructions below are for Honeywell RFTerm. If a different terminal emulation software is installed on your Thor VM3 refer to the documentation for that software.

Before you make a host connection, you will, at a minimum, need to know:

- the alias name or IP address (Host Address) and
- the port number (Telnet Port) of the host system to properly set up your host session.

1. Make sure the mobile client network settings are configured and functional. If you are connecting over wireless LAN (802.11*x*), make sure your mobile client is communicating with the Access Point.
2. From **Start > Program**, run **RFTerm** or tap the RFTerm icon on the desktop.
3. Select **Session > Configure** from the application menu and select the “host type” that you require. This will depend on the type of host system that you are going to connect to; i.e., 3270 mainframe, AS/400 5250 server or VT host.

4. Enter the “Host Address” of the host system that you wish to connect to. This may either be a **DNS name or an IP address of the host** system.
5. Update the **telnet port number**, if your host application is configured to listen on a specific port. If not, just use the default telnet port.
6. Select **OK.**
7. Select **Session > Connect** from the application menu or tap the “Connect” button on the Tool Bar. Upon a successful connection, you should see the host application screen displayed.

To change options such as Display, Colors, Cursor, Bar Code, etc., refer to these sections in the *RFTerm Reference Guide* for complete descriptions of these and other features.

Cleaning the Touch Screen

Note: These instructions are for components made of glass. If there is a removable protective film sheet on the display, remove the film sheet before cleaning the screen.

Keep fingers and rough or sharp objects away from the bar code reader scanning aperture and the mobile device touch screen.

If the glass becomes soiled or smudged, clean only with a standard household cleaner such as Windex® without vinegar or use isopropyl alcohol. Dampen the cloth with the cleaner and then wipe the surface.

Do not use paper towels or harsh-chemical-based cleaning fluids since they may result in damage to the glass surface. Use a clean, damp, lint-free cloth.

Do not scrub optical surfaces. If possible, clean only those areas which are soiled. Lint and particulates can be removed with clean, filtered canned air.

Startup Help

Contact Technical Assistance (page 6-1) if you need more help.

Thor VM3 seems to lockup as soon as it is rebooted.	There may be slight delays while the wireless client connects to the network, authorization for voice-enabled applications complete, and Bluetooth relationships establish or re-establish. When an application begins, the Thor VM3 is ready for use.

3 Hardware Overview

System Hardware

802.11a/b/gWireless Client

Central Processing Unit

The CPU is a 1.6 GHz Intel Atom processor. The operating system is Microsoft Windows . The OS image is stored on an internal CompactFlash memory card and is loaded into DRAM for execution.

Input/Output Components

The Thor VM3 supports the following I/O components of the core logic:

- Two 9-pin RS-232 serial ports, COM1 and COM2.
- One slot for SD memory card.
- CompactFlash (CF) memory card drive.
- Integrated keyboard.
- Ports available via adapter cables: USB host port, CANbus, Audio.

System Memory

Main system memory is GB SDRAM.

Video Subsystem

The Thor VM3 video subsystem consists of a color TFT display. The video subsystem complies with the VESA VL bus standard. The resolution of this display is 800 x 480 pixels. This resolution complies with the WVGA graphics industry standard.

The display supports screen blanking to eliminate driver distraction when the vehicle is in motion.

Audio Interface

Speakers are located on the bottom front of the Thor VM3. A headset adapter cable provides a connection for headset operation. When a headset is plugged into the adapter cable, the main speakers are disabled.

A microphone is located at the upper right of the Thor VM3 display, near the Thor VM3 emblem. When a headset is plugged into the adapter cable, the internal microphone is disabled.

Card Slots

CompactFlash (CF) Slot

The CF ATA slot is not hot swappable. The Thor VM3 must be powered down to insert or remove an ATA card. Since the operating system is stored on the CF ATA card, the Thor VM3 cannot operate without the ATA card.

Secure Digital (SD) Slot

The SD slot accepts an SD memory card. The SD card is hot swappable.

Bluetooth EZPair

The Thor VM3 contains Bluetooth version 2.0 with Enhanced Data Rate (EDR) up to 3.0 Mbit/s over the air. Bluetooth device connection (or pairing) can occur at distances up to 32.8 ft (10 meters) Line of Sight. The wireless client retains wireless connectivity while Bluetooth is active.

The user cannot select PIN authentication or encryption on connections from the Thor VM3. However, the Thor VM3 supports authentication requests from pairing devices. If a pairing device requests authentication or encryption, the Thor VM3 displays a prompt for the PIN or passcode. Maximum encryption is 128 bit. Encryption is based on the length of the user's passcode.

Bluetooth simultaneously supports one printer as a slave Bluetooth device and one scanner, either as a slave or as a master Bluetooth device.

- The LED on the Bluetooth scanner illuminates during a scanning operation.
- Multiple beeps may be heard during a bar code scan using a mobile Bluetooth scanner; beeps from the mobile Bluetooth scanner as the bar code data is accepted/rejected, and other beeps from the Thor VM3 during final bar code data manipulation.

WWAN

WWAN (Wireless Wide Area Networking) is available on the Thor VM3. A slot is provided for a SIM card.

GPS

GPS (Global Positioning System) is available on the Thor VM3.

Power

Vehicle DC Power Supply

Vehicle power input for the Thor VM3 dock is 10V to 60V DC and is accepted without the need to perform any manual operation within the Thor VM3 dock, see 12-48 VDC Vehicles (10-60 VDC Direct Connection) (page 1-25). The dock provides a conditioned power output for the Thor VM3. By using a specified DC/DC power supply, input voltage of 50-150V DC can be accepted, see 60-144 VDC Vehicles (50-150 VDC Power Supply, Screws on Top of Lid) (page 1-33) or 60-144 VDC Vehicles (50-150 VDC Power Supply, Screws on Top of Lid) (page 1-33).

Power input is fused for protection and the fuse is externally accessible, see Fuse (page 3-4).

External AC Power Supply

If DC power is not available – for example, in an office environment – an optional external Universal Input Power Supply can be used to convert AC wall power to an appropriate DC level. AC to DC power input for the Thor VM3 is delivered to the Quick Mount Smart Dock via an optional external power supply and adapter cable. See External AC/DC Power Supply (page 1-41).

Uninterruptible Power Supply

The Thor VM3 contains an internal UPS battery. The user can Replace UPS Battery (page 1-83)

The UPS battery is automatically charged when the Thor VM3 is placed in a powered dock, provided the safe charging temperature conditions below are met.

When external power is removed, the UPS automatically powers the Thor VM3 with no user intervention. When running on UPS power, the power management timeouts may be different than when vehicle power is applied.

The UPS allows the Thor VM3 to continue operation when not mounted in a dock or when the vehicle battery is being swapped. When fully charged the UPS battery is designed to power the Thor VM3 for a minimum of 30 minutes at temperatures of -20ºC (-4ºF) or greater. For the extended temperature version of the Thor VM3, the UPS provides a minimum of 10 minutes of operation between -20ºC (-4ºF) and -30ºC (-22ºF).

If operating on UPS power and the UPS battery becomes critically low, the Thor VM3 performs a controlled shutdown.

If there is no external power available, there must be 10% or greater power in the UPS battery or the Thor VM3 does not power on.

The UPS status LED and the Battery Control Panel can be used to monitor the state of the UPS battery.

Safe Charging Temperature Range

The internal temperature of the Thor VM3 is the trigger for UPS battery charging.

- The UPS battery is not charged when the internal Thor VM3 temperature is below 0°C (32°F). This corresponds to an ambient (room) temperature of approximately -10°C (-14°F).
- The UPS battery is not charged when the internal Thor VM3 temperature is above 45°C (113°F). This corresponds to an ambient (room) temperature of approximately 35°C (95°F).

- If the UPS battery cannot be charged due to a temperature extreme, the UPS Status LED (page 3-10) is amber. Move the Thor VM3 to a different location to charge the UPS battery.

When the Thor VM3 is operated in an environment where the UPS battery is not able to charge due to temperature extremes, the Thor VM3 should be removed to a location within the safe charging temperature range during off hours. A discharged UPS battery cannot protect against data loss in the event vehicle power is interrupted.

Charging Timeout

- A fully discharged UPS battery normally recharges in less than 4 hours when the Thor VM3 is in a powered dock and within the safe charging temperature range.
- If the UPS battery is not charged before an 8 hour (or 4 hours for some earlier software revisions) timeout period expires, the UPS Status LED (page 3-10) is amber.
- The charge timeout is reset if charging resumes upon application of external power.
- The charge timeout is reset if charging resumes when the Thor VM3 enters the permissible temperature range for charging.

Charging and Power Management

Backup Battery

The Thor VM3 has a permanent Lithium battery installed to maintain time, date and CMOS setup information for a minimum of 90 days. The lithium battery is not user serviceable and should last years with normal use before it requires replacement.

Note: The backup battery should only be changed by authorized service personnel.

Fuse

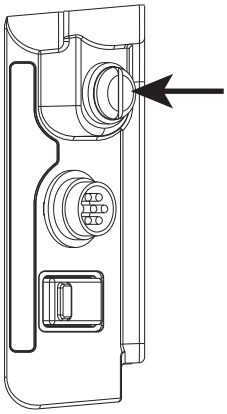

The Thor VM3 uses an 8A time delay (slow blow), fuse that is externally accessible and user replaceable. The fuse is located on the back of the Quick Mount Smart Dock. The fuse is accessed by unscrewing the cap as indicated.

Should it need replacement, replace with same size, rating and type of fuse:

- **Littelfuse 0215008.MXP**
- **Cooper Bussmann BK1/S506-8-R**
- **Bel Fuse 5HT 8-R**

or equivalent.

Fuse has voltage on it even when power is off. Always disconnect input power before changing the fuse.

Power Management Modes

Power Controls

Power Switch

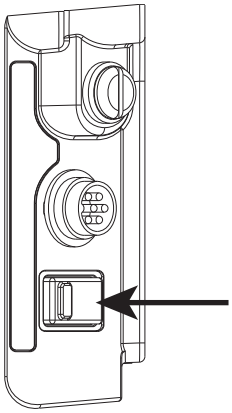

After all cables are connected, the Thor VM3 can be powered on.

There is a power switch located on the back of the Quick Mount Smart Dock. The power switch is a rocker switch.

The power switch has a raised bump to identify the switch position even when it is hidden from view. When the side of the switch with the raised bump is pressed, the power switch is On. If the dock is connected to external power, the dock delivers power to the Thor VM3.

Generally, once the dock is powered On, there is no need to power it off. The dock power can remain On even when the Thor VM3 is not attached.

Power Button

External Connectors

Power the Thor VM3 off before attaching a cable to any port (serial, USB, Audio/CAN, etc.).

The external I/O connectors for the Thor VM3 are located on the right side of the Quick Mount Smart Dock (when viewed from the back).

The Power Supply Connector (page 3-6) is on the left side of the dock (when viewed from the back).

Antenna connectors are located on the top rear of the Thor VM3.

Serial Connector (COM1 and COM2)

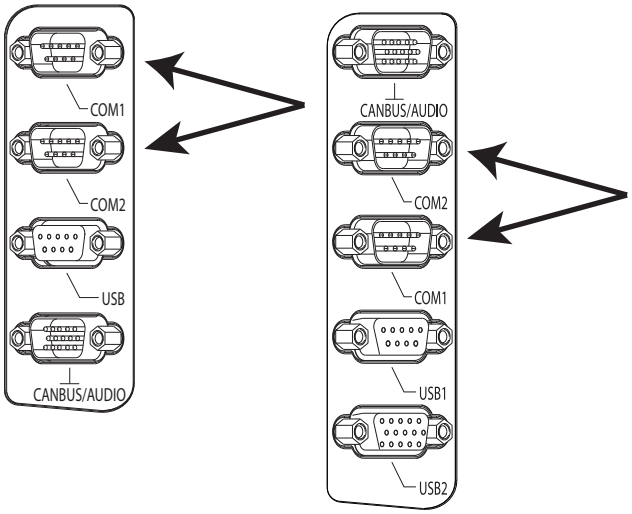

Smart Dock Enhanced Smart Doc

The COM1 and COM2 connectors are D-9 male connectors located on the back of the Quick Mount Smart Dock.

Power the Thor VM3 off before attaching a cable to any port (serial, USB, Audio/CAN, etc.).

The serial connectors are industry-standard RS-232, PC/AT standard 9–pin “D” male connector. See COM1 and COM2 Connector (page 5-5) for connector pinout detail.

See Connect Serial Device (page 1-42) for more information.

If a COM port is not being used for a scanner, it can be used for Screen Blanking (page 1-38) when the vehicle is in motion.

Screen Blanking

The screen blanking signal can be provided either by a Honeywell Screen Blanking Box or a user supplied switch or relay. See Screen Blanking (page 1-38) for information on connecting screen blanking accessories.

USB Connector(s)

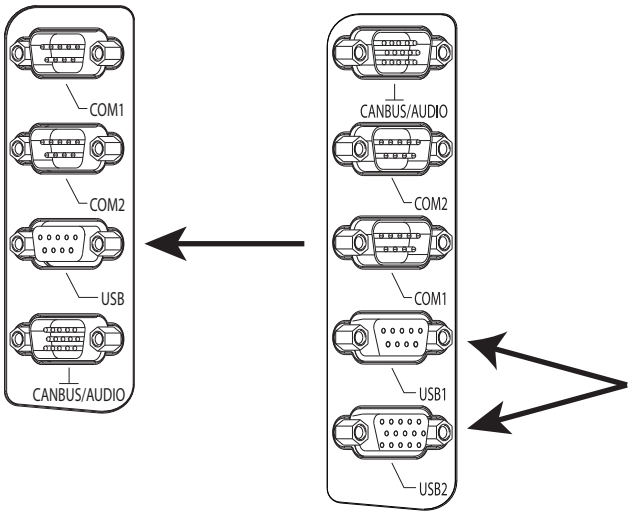

Smart Dock Enhanced Smart Doc

The USB or USB1 connector is a D-9 female connector located on the back of the Quick Mount Smart Dock. See USB Connector (page 5-6) for connector pinout detail.

The USB-2 connector is a D-15 female connector located on the back of the Quick Mount Smart Dock. See USB Connector (page 5-6) for connector pinout detail.

Power the Thor VM3 off before attaching a cable to any port (serial, USB, Audio/CAN, etc.).

CANbus / Audio Connector

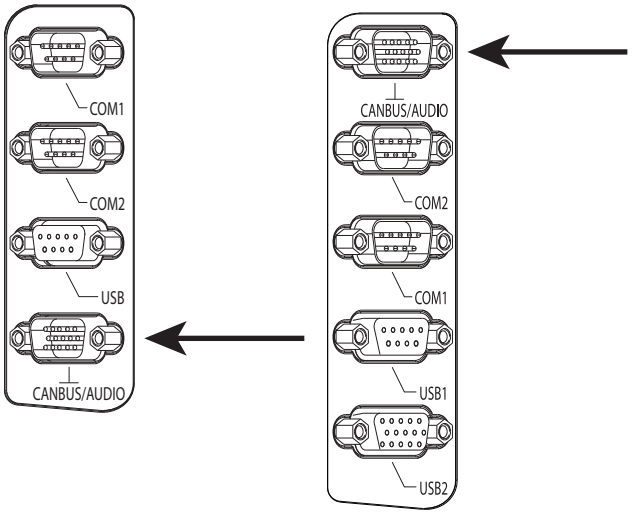

Smart Dock Enhanced Smart Doc

The CANbus/Audio connector is a D-15 male connector located on the back of the Quick Mount Smart Dock.

The connector supports a headset adapter cable or a CANbus cable. The Thor VM3 does not support connecting audio and CANbus simultaneously.

See CANbus / Audio Connector (page 5-9) for connector pinout detail.

A headset cable attaches to the CANbus / Audio connector and provides a quick connect connection for a headset. See Connect Headset Cable (page 1-43) for more information.

The CANbus Y cable has a 9 pin F SAE J1939 (Deutsch) and 9 pin M SAE J1939 (Deutsch) connector. See Connect CANbus Cable (page 1-44) for more information.

The CANbus interface is a virtual COM4 port. This port can be accessed using standard Windows API calls.

Power Supply Connector

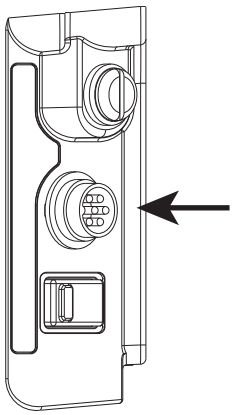

Power is supplied to the Thor VM3 through the power connector. Additionally this assembly provides a connection point for the vehicle's chassis ground to be connected internally to the conductive chassis of the computer.

The Thor VM3 internal power supply can accept DC input voltages in the range of 10 to 60 Volts DC.

See Power Supply Connector (page 5-5) for connector pinout detail. See Connect Power (page 1-24) for more information on connecting power to the Thor VM3.

Antenna Connections

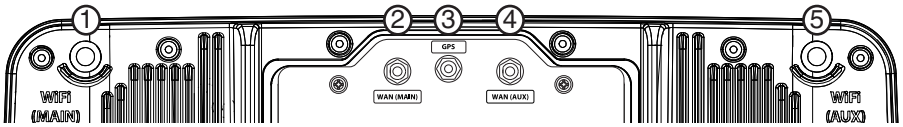

The Thor VM3 is equipped with an 802.11 radio and can be ordered with internal antennas, external antennas or external remote mount antennas. When the Thor VM3 is ordered with internal antennas, the external antenna connectors are not used. GPS and WWAN are optional on the Thor VM3 and require external remote mount antennas.

1. WI-FI (MAIN) 802.11 Main External Antenna Connector
2. WAN (MAIN) (Blue label) Main WWAN Antenna Connector
3. GPS (Green label) GPS Antenna Connector
4. WAN (AUX) (Blue label) Auxiliary WWAN Antenna Connector
5. WI-FI (AUX) 802.11 Auxiliary External Antenna Connector

External Antenna Connector

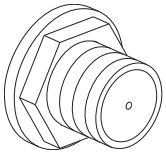

When the Thor VM3 is ordered with the internal antenna option, the 802.11 antenna connectors on the back are not connected to the 802.11 radio. Instead the internal antenna connector is connected to the 802.11 radio.

Remove the rubber cap, if present, from the antenna connector before connecting an external antenna.

Internal 802.11 Antenna

If the internal 802.11 antenna option is ordered, antennas are mounted inside the Thor VM3. The internal antennas are not user accessible.

Vehicle Remote Antenna

The external antennas can be remotely mounted on the vehicle. See Install Remote Antenna (page 1-45) for instructions. External antenna kits are available for the 802.11 Wi-Fi radio, GPS and WWAN.

Keyboard Options

•

•

Integrated Keypad

The integrated keypad contains seven programmable keys, a blue modifier key and an orange modifier key.

The P1 though P7 keys are user programmable.

- When used with no modifier key, P1 through P7 can be configured for a user programmable function.
- When used with the Orange modifier key, P1 through P7 provide secondary programmable keys, P8 through P14, and can be configured for a user programmable function.
- The programmable keys can be remapped to provide a single keypress, a string of keypresses or to execute an application or command. Key remapping is configured via the Programmable Key (page 5-41) option in the Control Panel.
- Programmable keys persist across a warmboot or power cycle.
- When used with the Blue modifier key, P1 and P2 keys are used to adjust speaker volume and P5 and P6 keys are used to adjust display brightness.

The Thor VM3 integrated keypad is backlit.

- By default, the integrated keypad backlight follows the display backlight. When the display backlight is on, the integrated keypad backlight is on.
- If the display backlight brightness is increased (or decreased) the integrated keypad backlight brightness is increased (or decreased).The integrated keypad backlight and the display share the same timer, which is configured in the Power Options (page 2-17) control panel.
- The integrated keypad backlight can be disabled via the Options (page 5-23) control panel.

Keypad LEDs

See Keyboard LEDs (page 3-12) for details.

95-Key USB Keyboard

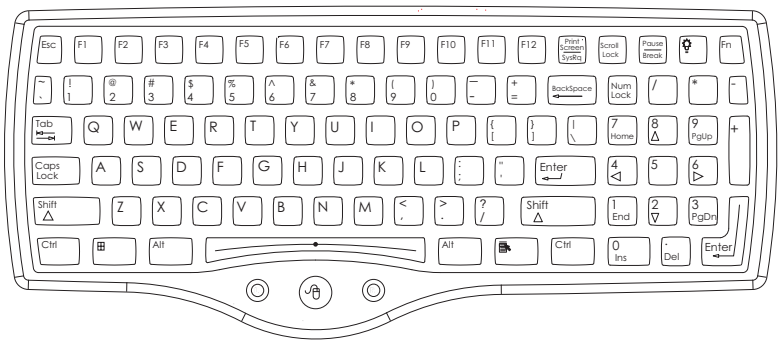

The Thor VM3 uses an optional rugged QWERTY 95 key keyboard, designed for ease of use with the Windows CE operating system. The USB keyboard connects directly to the D9 USB connector on the Thor VM3 Quick Mount Smart Dock.

- The 95 key keyboard supports all 104 keyboard functions (101 standard keyboard plus Windows keys) and includes an integrated pointing device and left and right mouse buttons. However, because the keyboard only has 95 keys, all functions are not visible (or printed on the keyboard). Therefore the keyboard supports what is called hidden keys - keys that are accessible but not visible on the keyboard.
- The 95 key keyboard keys are backlit. The keyboard backlight is manually controlled.

Keyboard Backlight

The keyboard backlight key in the top right hand corner has a light bulb icon.

The keyboard keys are backlit. The keyboard backlight is manually controlled using the backlight key in the upper right hand corner of the keyboard. Pressing the backlight key cycles the keyboard backlight through the levels of backlight intensity: Off, Low intensity, Medium intensity, Maximum intensity, Off, etc. When the Thor VM3 is powered on, the keyboard backlight defaults to Off.

Since the keyboard is a USB device, by default the external keyboard backlight is turned off when the Thor VM3 enters Standby/Sleep. This behavior can be changed by enabling USB power in Standby/Sleep on the Options (page 5-23) control panel.

USB Keyboard / Mouse

A standard USB keyboard or mouse can be attached to the Thor VM3 using the appropriate adapter cable.

The Y cable attaches to the Thor VM3 and provides a USB connector. Please refer to documentation provided with the USB keyboard or mouse for more information on their operation.

LED Functions

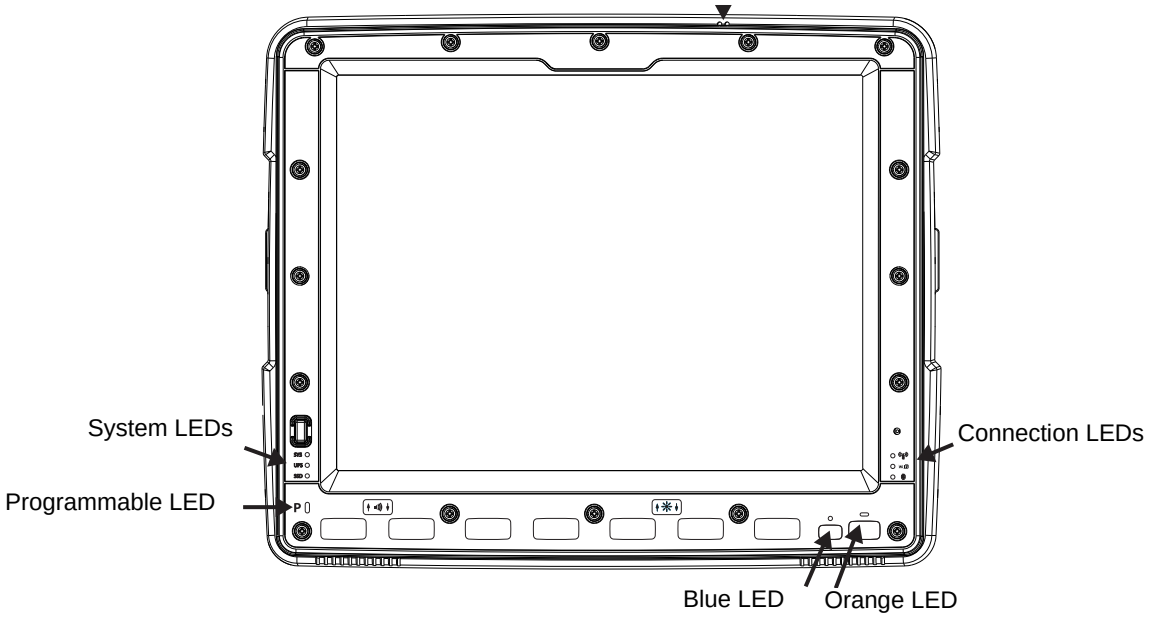

System LEDs

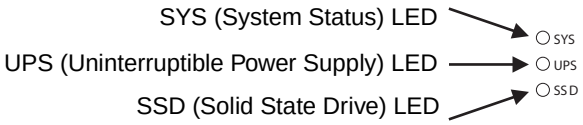

SYS (System Status) LED

LED Behavior	System State
Solid Green	• On • On but Display Off
Green blinking very slowly External power present (1/2 sec. on, 4 1/2 sec. off)	•
Off External power present	• Off

LED Behavior	System State
Off External power not present	• Off
Green blinking slowly External power present (1/2 sec. on, 1 1/2 sec. off)	CPU temperature less than -20ºC, Heater warming CPU for 30 sec.
Green blinking slowly External power not present (1/2 sec. on, 1 1/2 sec. off)	CPU temperature less than -20ºC, Need to move unit to warmer environment

UPS Status LED

The color of the UPS LED identifies the charge level, while the behavior of the LED identifies the charging state.

Charge Level

LED Color	Status
Green	Fully charged (>90%)
Amber	• Less than fully charged, but more than 2 minutes runtime remaining • Out of Safe Charging Temperature Range (page 3-2) Charging only occurs between approximately -10°C and 35°C ambient temperature • No UPS present • Charging Timeout (page 3-3) Not fully charged after 4 or 8 hours depending on software revision.
Red	Low battery, less than 2 minutes runtime until shutdown

Charging State

LED Behavior	Status
Slow Blink (1 sec. on, 3 sec. off)	Charging
Fast Blink (1/2 sec. on, 1/2 sec. off)	UPS supplying power and discharging
On	Neither charging or discharging
Off	Unit is off or is in Suspend

SSD (Solid State Drive) LED

LED Behavior	Status
Flashing Green	SSD read or write activity
Off	No SSD read or write activity

Connection LEDs

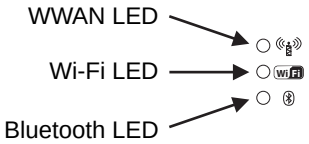

WWAN LED

LED Behavior	Status
Solid Green	Indicates a WWAN connection to a network
Off	Indicates no WWAN connection

Wi-Fi LED

LED Behavior	Status
Solid Green	Indicates a connection with an IP address to an Access Point
Off	Indicates no connection to an Access Point

Bluetooth LED

LED Behavior	Status
Blue Blinking Slowly	Bluetooth is paired but not connected to a device
Blue Blinking Medium	Bluetooth is paired and connected to a device
Blue Blinking Fast	Bluetooth is discovering Bluetooth devices
Off	Bluetooth hardware has been turned off

The Bluetooth LED blinks once every 6 seconds when the Bluetooth client is paired but not connected. It blinks once for a very short time every 2 seconds when paired and connected. It blinks every second when in discovery. The LED is off when the Bluetooth client is off.

Keyboard LEDs

The keyboard LEDs are located near the specified key.

Blue LED

Solid Blue	• Indicates the **Blue** modifier key is active • Pressing the **Blue** key a second time exits this modifier mode and turns off the LED • Pressing the **Orange** key exits the Blue mode and turns off the Blue LED • If no key other key is pressed within five seconds, the **Blue** key times out and turns off the LED • When Blue mode is active, keys P1 through P4 provide volume and brightness adjustment functions
Off	Blue mode is not invoked

Orange LED

LED Behavior	Status
Solid Orange	• Indicates the **Orange** modifier key is active. Orange mode is invoked for the next keypress only • Pressing the **Orange** key a second time exits this modifier mode and turns off the LED • Pressing the **Blue** key exits the Orange mode and turns off the Orange LED
Off	Orange mode is not invoked.

Programmable LED

The Programmable LED is available for user applications. The LED defaults to Off unless activated by user application.

Display

The display is a thin-film transistor display capable of supporting WSVGA graphics modes. Display size is 1024x768 pixels. The display covering is designed to resist stains. The touch screen allows signature capture and touch input. The display supports screen blanking to eliminate driver distraction when the vehicle is in motion.

Touch Screen

The touch screen is a Resistive Panel with a scratch resistant finish that can detect touches by a stylus, and translate them into computer commands. In effect, it simulates a computer mouse. Only Delrin or plastic styluses should be used. A right mouse click is simulated by touching and holding the screen for the appropriate time interval.

When a dialog box is too large for the display, tap and drag the dialog box up or down or from side to side to view the remainder of the dialog box.

Always use the point of the stylus for tapping or making strokes on the display. Never use an actual pen, pencil, sharp or abrasive object to write on the touch screen.

An extra or replacement stylus may be ordered.

A replaceable touch screen protective film is available when the Thor VM3 is used in an abrasive environment. Contact Technical Assistance (page 6-1) for availability.

Note: If the touch screen is disabled or looses calibration on a Thor VM3, you must use a USB mouse or keyboard attached to the Thor VM3 to access the control panel to re-enable or recalibrate the touch screen unless a programmable key has been assigned to that function.

Touch Screen Defroster

Extended temperature versions of the Thor VM3 contain a touch screen defroster. The touch screen defroster can be disabled when not needed via the Screen Control (page 2-20) panel. The defroster trip point is configurable. The defroster is always disabled when the device is operating from UPS battery power.

Screen Blanking

Screen blanking (blackout) can be enabled when the vehicle is in motion. See Screen Blanking (page 1-38) for hardware setup and Screen Control (page 2-20) for software setup to enable screen blanking. Once screen blanking is enabled, the display is blanked out any time when the cable sends the signal the vehicle is in motion. If the cable is removed, screen blanking is disabled and the display remains on.

Display Backlight Control

The display brightness on a Thor VM3 equipped with an outdoor display can be configured to automatically adjust depending on the ambient light level via Screen Control (page 2-20).

Note: When automatic brightness control is enabled, the manual display brightness controls described below have no effect.

The display brightness can be adjusted manually, via the keypad:

1. Press the **Blue** key to enter Blue mode.
2.
3. Press **P5** to increase brightness or **P6** to decrease brightness.
4. Press the **Blue** key to exit Blue mode.

Vehicle Mounting and Accessory Installation

Introduction

The Thor VM3 is designed to be mounted to a Quick Mount Smart Dock in a vehicle with either a RAM mount system. A power cable is provided with the Thor VM3 dock. Optional communication cables are available.

Vehicle mounting brackets are specifically designed for vehicle mount applications. The vehicle mounted assembly restrains the Thor VM3 and isolates it from shock and vibration. A RAM metal table stand is available to secure the Thor VM3 and dock when in an office environment, for example.

The vehicle mount holds the Quick Mount Smart Dock and the Thor VM3 attaches to the dock. The dock remains attached to the vehicle, however, the Thor VM3 has a quick release located on the lower rear side that allows the Thor VM3 to easily be removed from the dock. The Thor VM3 can be operated for a minimum of 30 minutes from an internal UPS battery when not attached to a dock. The Thor VM3 can be transferred from one dock equipped vehicle to another for easy portability. The dock provides accessory attachment and conditioned power for the Thor VM3.

Overhead, dash and roof support pillar mounting is via a RAM Mount accessory which includes all the hardware required for vehicle mounting.

Never put the Thor VM3 into the vehicle mounted assembly until the assembly is securely fastened to the vehicle.

Prepare for Vehicle Mounting

The Thor VM3 should be secured to an area in the vehicle where it:

- Does not obstruct the driver's vision or safe vehicle operation.
- Will be protected from rain or inclement weather.
- Will be protected from extremely high concentrations of dust or wind-blown debris.
- Can be easily accessed by a user seated in the driver's seat while the vehicle is not in operation.

Quick Start

The following list outlines, in a general way, the process to follow when mounting the Thor VM3 in a vehicle. Refer to the following sections in this document for more details.

1. Install RAM Mount (page 1-18) to the vehicle.
2. Place Thor VM3 in the Dock (page 1-16).
3. Adjust the Thor VM3 to the best viewing angle.
4. Install Remote Antenna (page 1-45) if necessary.
5. Connect Cables (page 1-23) for any peripherals.
6. Connect vehicle power:
   - 12-48 VDC Vehicles (10-60 VDC Direct Connection) (page 1-25)
   - 60-144 VDC Vehicles (50-150 VDC Power Supply, Screws on Top of Lid) (page 1-33)
   - 60-144 VDC Vehicles (50-150 VDC Power Supply, Screws on Side of Lid) (page 1-29).
   - Thor VX8 / Thor VX9 Adapter Cable (page 1-37)
   - VX6 / VX7 Adapter Cable (page 1-36)
7. Secure all cables in Strain Relief Cable Clamps (page 1-23).

The Thor VM3 is ready for use.

Maintenance - Vehicle Mounted Devices

Check the vehicle mounting hardware frequently and re-tighten if necessary.

If the vehicle mounting hardware and connections become broken, loose or cracked, the assembly must be taken out of service and replaced. Contact Technical Assistance (page 6-1) for help.

Cleaning

Do not use paper towels or harsh-chemical-based cleaning fluids since they may result in damage to the Thor VM3 surfaces, cables, connectors and mounting hardware.

Use a clean soft cloth to wipe any dirt, moisture or grease from the Thor VM3, connectors, cables or the vehicle mounting hardware. Do not use any liquid to clean the Thor VM3, or connectors. Spray or dampen the cleaning cloth with the cleaning liquid. If possible, clean only those areas which are soiled. Lint/particulates can be removed with clean, filtered canned air.

Place Thor VM3 in the Dock

Back of Thor VM3

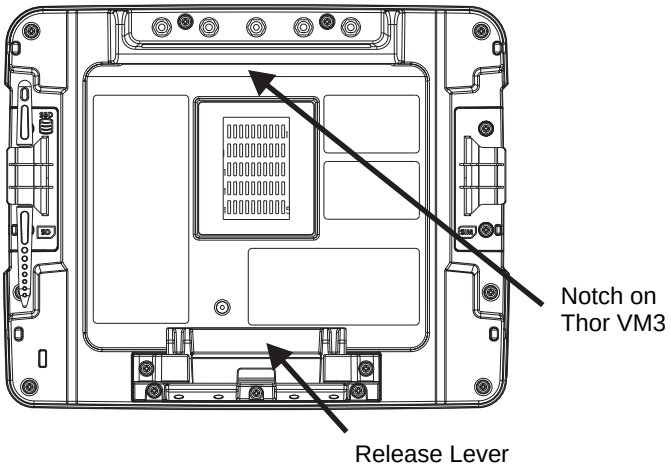

Front of Quick Mount Smart Dock

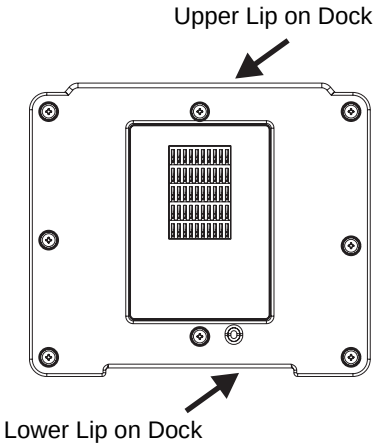

1. Locate the notch on the upper rear of the Thor VM3.
2. Slide this notch over the top lip of the dock. Slide the Thor VM3 from side to side on the dock to make sure it fully engages on the lip of the dock. If the Thor VM3 cannot be slid side to side, the lip is engaged.
3. Pull the quick release lever on the Thor VM3 down and push the Thor VM3 against the dock.
4. Release the quick release lever. The quick release lever catches the lower lip on the dock and secures the Thor VM3 to the dock.
5. If necessary, adjust the viewing angle of the Thor VM3.

When the Thor VM3 is placed in the dock, the following may happen:

When the Thor VM3 is removed from the dock, the following may happen:

Dock I/O Pin Cover.

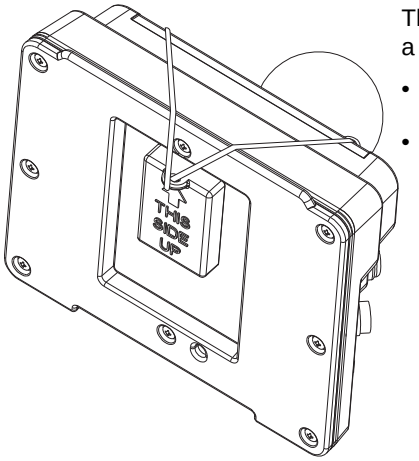

The dock contains a tethered I/O Pin Cover to protect the I/O pins on the dock when a Thor VM3 is not mounted in the dock.

- When the Thor VM3 is not installed in the dock, use the I/O Pin Cover to protect the pins on the dock as shown.
- When a Thor VM3 is installed in the dock, the I/O Pin Cover can be placed out of the way behind the dock.

Padlock

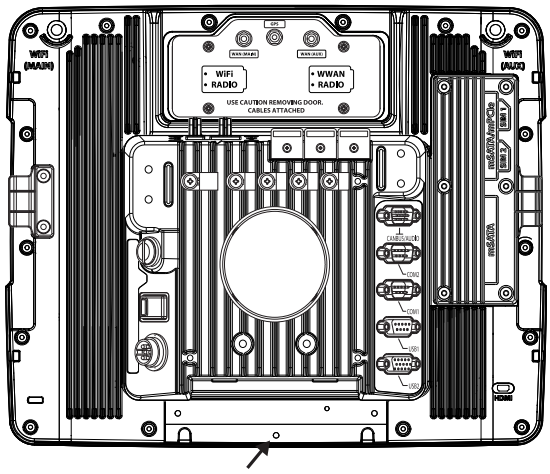

It may be desirable to secure the Thor VM3 in the dock so it cannot be removed from the dock. The quick release handle on the Thor VM3 is notched to allow a user supplied standard padlock to be placed through a hole in the bracket on the back of the Thor VM3 in the location shown below. Once the padlock is installed, the release handle cannot be moved so the Thor VM3 cannot be removed from the dock. The padlock shackle must be smaller than 3/16” (4.76mm).

A cable tie wrap can be used instead of a padlock if desired.

Laptop Security Cable

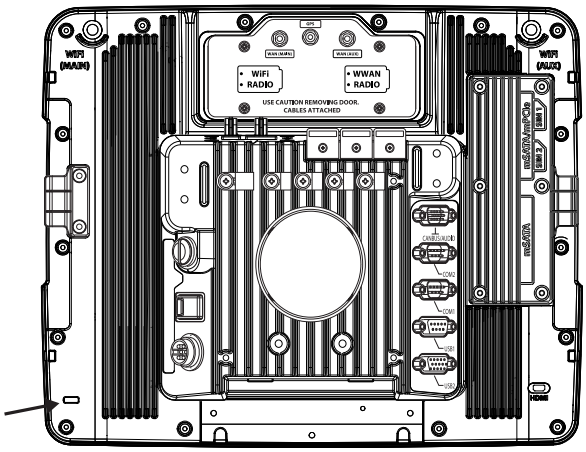

The Thor VM3 can be secured with a standard laptop security cable using the slot on the back of the Thor VM3.

Install RAM Mount

***CAUTION** - This device is intended to transmit RF energy. For protection against RF exposure to humans and in accordance with FCC rules and Industry Canada rules, this transmitter should be installed such that a minimum separation distance of at least 20 cm (7.8 in.) is maintained between the antenna and the general population. This device is not to be co-located with other transmitters.*

Before installation begins, verify you have the applicable vehicle mounting bracket assembly components necessary, as shown in the following figures.

Components - RAM Mounting Kits

In addition to the kits below, individual RAM mounting components are also available.

Each mounting kit contains:

RAM Ball (Size D) for back of Thor VM3 Quick Mount Smart Dock with hardware (screws and washers) to attach RAM ball to dock

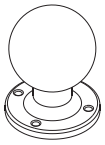

RAM Arm (Size D), length varies by kit selected

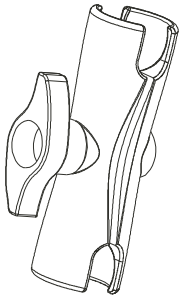

One of three mounting options:

- RAM Ball mount (Size D, may include 3 cone washers), or

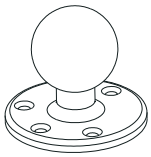

- RAM Clamp mount (Size D), or

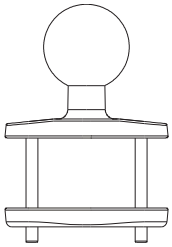

- RAM Plate mount with RAM Ball (Size D) with Hardware (cone washers and nuts) to attach Ball to Plate

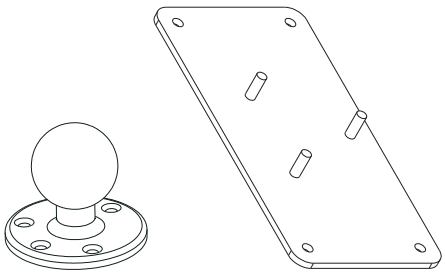

Procedure - RAM Mount Assembly

Equipment Needed: Sockets, screwdriver and a Torque wrench capable of measuring to 50 inch pounds (5.64±.56 N/m).

Note: Torquing tool is not supplied by Honeywell. Tools needed to attach the RAM Clamp Mount to the vehicle are not supplied by Honeywell.

Torque Measurement

You will need a torquing tool capable of torquing to 20 inch pounds (1.10 N/m). Torque all screws and bolts according to the following table:

For these nuts…	Torque to
10-32 lock nuts	17 - 20 in/lb (0-95 - 1.10 N/m)

Step 1a – Attach RAM Ball to Vehicle

Note: If you are using the RAM clamp mount, please go to *Step 1b – Mount RAM Clamp to Vehicle* (page 1-20). *If you are using the RAM plate mount, please go to* *Step 1c – Attach RAM Plate to Vehicle and Attach RAM Ball* (page 1-21).

1. Determine the position for mounting the RAM ball base. Be sure to position the RAM bracket to allow access to the switches and ports on the bottom of the Thor VM3.
2. Attach the RAM ball base to the vehicle mounting surface using three or four 1/4 bolts (not included) or equivalent fasteners. If the mounting kit includes cone washers, use those as illustrated below.

IMPORTANT: Mount to the most rigid surface available.

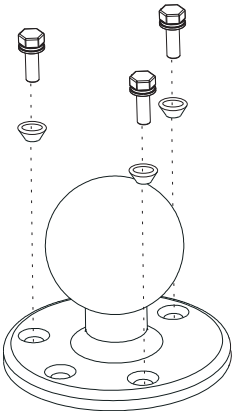

Mounting Dimensions

Note: Drill and tap holes for three 1/4 bolts. Drawing not to scale.

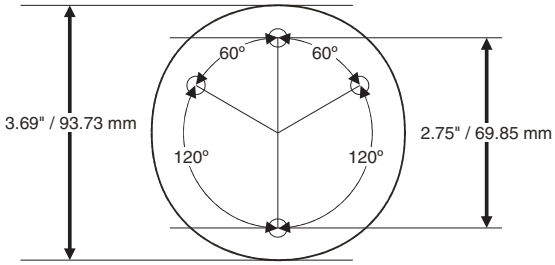

Step 1b – Mount RAM Clamp to Vehicle

Note: If you are using the RAM ball mount, please go to *Step 1a – Attach RAM Ball to Vehicle* (page 1-19)*. If you are using the RAM plate mount, please go to* *Step 1c – Attach RAM Plate to Vehicle and Attach RAM Ball* (page 1-21)*.*

1. Determine the position for mounting the RAM clamp mount. The clamp mount can be used on a beam (such as on a fork lift truck) up to 2.5” (63.5 mm) wide and approximately 2” (50.8 mm) thick. The clamp may be attached to a thicker beam by substituting longer bolts (not included). Be sure to position the RAM clamp mount to allow access to the switches and ports on the bottom of the Thor VM3.

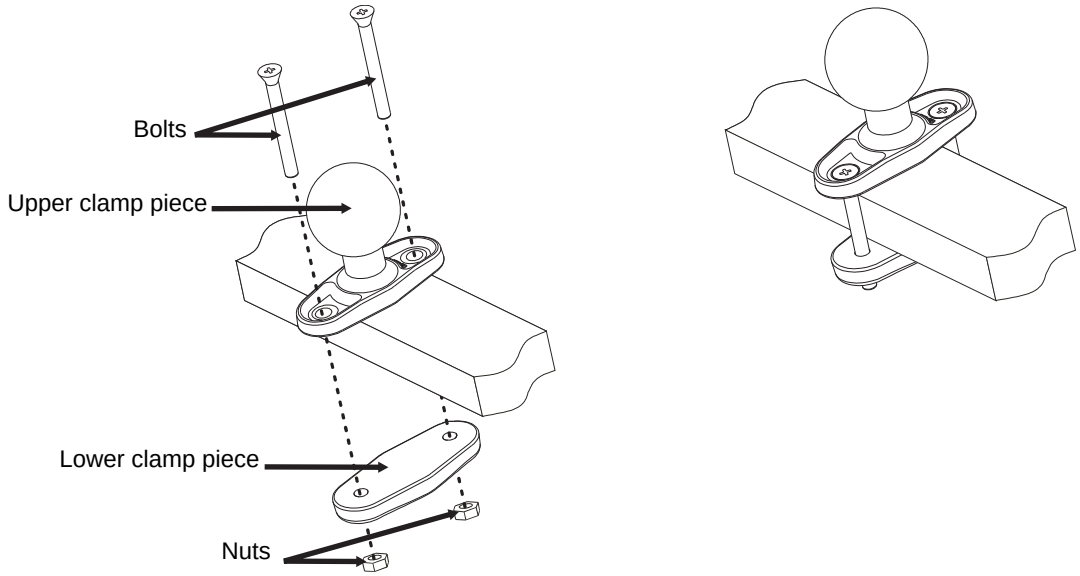

2. Position the upper clamp piece with ball on the beam. Place the bolts through the holes in the upper clamp piece.
3. Position the lower clamp piece below the beam. Align the bolts with the holes in the lower clamp piece.
4. Place the nylon locking nuts on the bolts and tighten the bolts.

Mounting Dimensions

Note: Drawing not to scale.

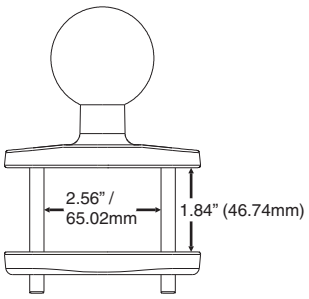

Step 1c – Attach RAM Plate to Vehicle and Attach RAM Ball

Note: If you are using the RAM ball mount, please go to *Step 1a – Attach RAM Ball to Vehicle* (page 1-19) *If you are using the RAM clamp mount, please go to* *Step 1b – Mount RAM Clamp to Vehicle* (page 1-20).

1. Determine the position for mounting the RAM ball plate. Be sure to position the RAM plate to allow access to the switches and ports on the bottom of the Thor VM3.
2. Attach the RAM ball plate to the vehicle mounting surface using four 1/4 bolts (not included) or equivalent fasteners.
3. If not already attached, attach the RAM ball to the RAM ball plate using three M6 nuts and washers.

IMPORTANT: Mount to the most rigid surface available.

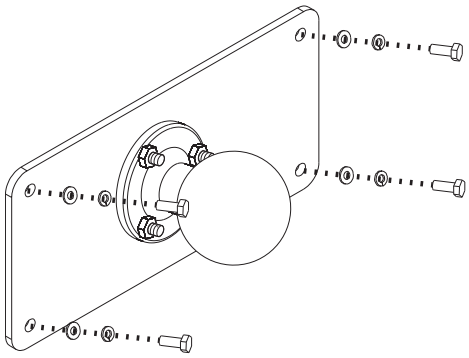

Mounting Dimensions

There are 4 mounting holes in the plate. Use four 1/4 bolts to secure the plate to the vehicle.

Note: Drawing not to scale.

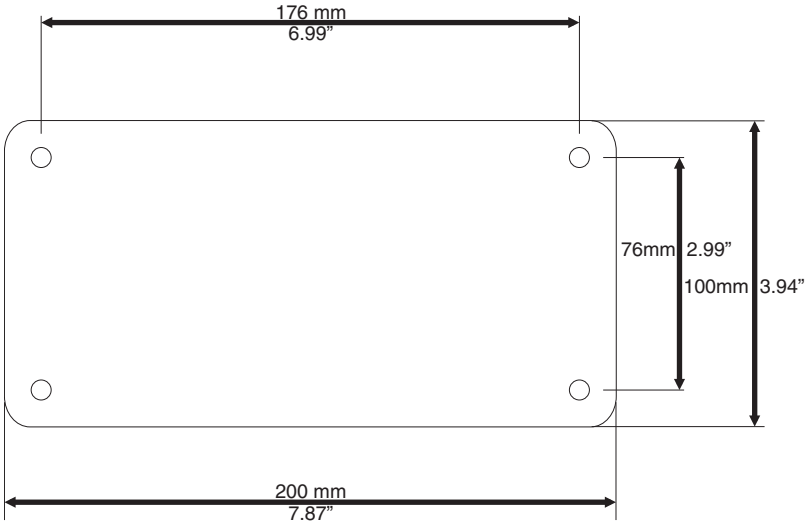

Step 2 – Attach RAM Mount Ball to the Thor VM3 Quick Mount Smart Dock

1. Turn the Thor VM3 off before attaching the RAM mount ball.
2. Place the Thor VM3 face down on a stable surface.

Step 3 – Attach Thor VM3 Assembly to RAM Mount

1. Slip the Size D RAM arm over the ball on the vehicle RAM mount (RAM Ball mount shown).
2. Insert the ball on the dock into the RAM arm and tighten the knob on the RAM arm using the supplied RAM wrench.

Step 4 – Place the Thor VM3 into the Dock

If the Thor VM3 is not already mounted to the dock, Place Thor VM3 in the Dock (page 1-16)

Connect Cables

There are many cables available for the Thor VM3 including power cables, and data/ communication cablesThor VM3.

Strain Relief Cable Clamps

Equipment Required: Phillips screwdriver (not supplied by Honeywell)

There are five strain relief cable clamps secured to the Thor VM3 Quick Mount Smart Dock.

Use the strain relief clamps to secure audio, power, and I/O cables attached to the Thor VM3 dock.

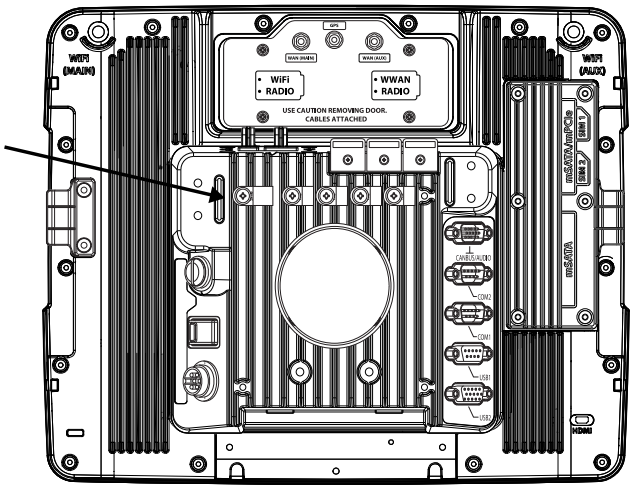

1. Determine the proper strain relief cable clamp. There are three sizes of cable clamps on the Thor VM3 which should be matched to the cable to be secured. For example, the largest clamp (on the left when viewing the back of the Thor VM3) is designed to secure the power cable.
2. Remove the strain relief clamp from the Thor VM3 by turning the screw counterclockwise. Put the screw aside in a safe location.
3. Slide the strain relief clamp over the cable.
4. Using a Phillips screwdriver and the screw that was removed, refasten the clamp holding the cable to the Quick Mount. Do not stretch the cable. Leave enough slack in the cable to allow it to be connected and disconnected easily when needed.
5. Continue in this manner until all cables are secured to the Thor VM3 dock.

Connect Power

Power options include:

- 12-48 VDC Vehicles (10-60 VDC Direct Connection) (see page 1-25) - Direct connection to vehicle power.
- 60-144 VDC Vehicles (50-150 VDC Power Supply, Screws on Side of Lid) (see page 1-29) - Requires the use of a DC/DC power supply.
- 60-144 VDC Vehicles (50-150 VDC Power Supply, Screws on Top of Lid) (see page 1-33) - Requires the use of a DC/DC power supply.
- VX6 / VX7 Adapter Cable (see page 1-36) - For applications where the Thor VM3 replaces a previously installed VX6 or VX7.
- Thor VX8 / Thor VX9 Adapter Cable (see page 1-37) - For applications where the Thor VM3 replaces a previously installed Thor VX8 or Thor VX9.
- Screen Blanking (see page 1-38) - Optional connection to blank the Thor VM3 display while the vehicle is in motion.
- External AC/DC Power Supply (see page 1-41) - For use when DC power is not available to power the Thor VM3, such as in an office environment.

See Power Supply Connector (page 5-5) for connector pinout

Power Cable Cautions

CAUTION *- When routing the power cable:*

- Route power cable away from the outside of the fork truck.
- Choose a mounting location so that the power cable does not extend outside the vehicle and that provides sufficient clearance so that the power cable (especially the dock connector end) is not pressed against part of the vehicle.
- Use the proper Strain Relief Cable Clamps (page 1-23) to secure cable.
- The power cable is less flexible in low temperature environments. Avoid sharp bends.

Regularly inspect power cable for damage, especially in low temperature environments. Contact Technical Assistance (page 6-1) *for replacement cable options.*

Power Cable Routing

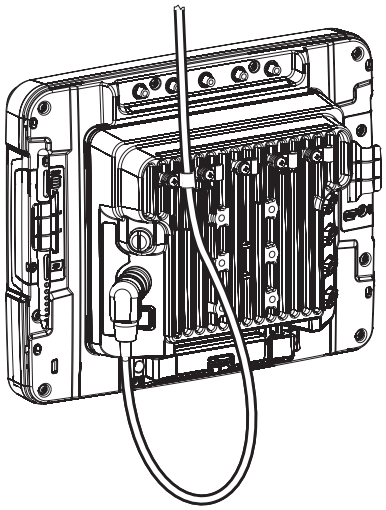

12-48 VDC Vehicles (10-60 VDC Direct Connection)

CAUTION *- For installation by trained service personnel only.*

Use caution when routing the power cable. See *Power Cable Cautions* (page 1-24).

Fuse Requirements

WARNING *- For proper and safe installation, the input power cable must be connected to a fused circuit on the vehicle. If the supply connection is made directly to the battery, the fuse should be installed in the positive lead within 5 inches (12.7 cm) of the battery's positive (+) terminal. Use VM3055FUSEKIT to install this fuse or use equivalent 20A fast blow fuse.*
Note: For North America, a UL Listed fuse is to be used

Power Cable Identification

The Power cable has a **right angle connector** and **6** wires:

Twist the red and red/white wires together and twist the black and black/white wires together before connecting to vehicle power.

Wire Color	Connection
Red	DC + (10-60 VDC)
Red/White	DC + (10-60 VDC)
Black	DC -
Black/White	DC -
Green	Ground
Blue	Ignition Input (optional)

Note: Correct electrical polarity is required for safe and proper installation. See the figures below for additional wire color-coding specifics.

The Thor VM3 DC input wires (Red, Red/White DC+ and Black, Black/White DC-) and the Blue ignition input wire are galvanically isolated. The Green ground input is used for electrostatic discharge (ESD) protection.

Vehicle 10-60VDC Direct Power Connection

1. The Thor VM3 must not be mounted in the Quick Mount Smart Dock. The power switch on the dock must be turned *Off*. The power cable must be UNPLUGGED from the dock.
2. While observing the Fuse Requirements (see page 1-25), connect the power cable as close as possible to the actual battery terminals of the vehicle (if using unswitched power).
3. Use proper electrical and mechanical fastening means for terminating the cable. Properly sized "crimp" type electrical terminals are an accepted method of termination. Please select electrical connectors sized for use with 20AWG (0.81mm2) conductors.
4. Refer to the wiring diagrams following this section for wire colors and connections:
   - Ignition Control Wiring Diagram (page 1-27)
   - Auto-On Control Wiring Diagram (page 1-28)
   - Manual Control Wiring Diagram (page 1-29)

5. Route the power cable the shortest way possible removing any left-over cable. The cable is rated for a maximum temperature of 105°C (221°F). Therefore, when routing this cable it should be protected from physical damage and from surfaces that might exceed this temperature. Cable should be protected from physical damage from moving parts. Do not expose the cable to chemicals or oil that may cause the wiring insulation to deteriorate. Always route the cable so that it does not interfere with safe operation and maintenance of the vehicle.
6. Provide mechanical support for the cable by securing it to the vehicle structure at approximately one foot intervals, taking care not to over tighten and pinch conductors or penetrate outer cable jacket.
7. Connect the watertight connector end of the power cable to the Thor VM3 Quick Mount Smart Dock power connector by aligning the connector pins to the power connector; push down on the watertight connector and twist it to fasten securely.
8. Secure the power cable to the Thor VM3 using the Strain Relief Cable Clamps (page 1-23).
9. Place Thor VM3 in the Dock (page 1-16)
10. If using the Screen Blanking (page 1-38) feature, install the screen blanking box or switch.
11. Press the Power Switch (page 3-4) on the back of the Thor VM3 dock.
12. Press the Power Button (page 3-4) on the front of the Thor VM3 to turn on the Thor VM3.

Ignition Control Wiring Diagram

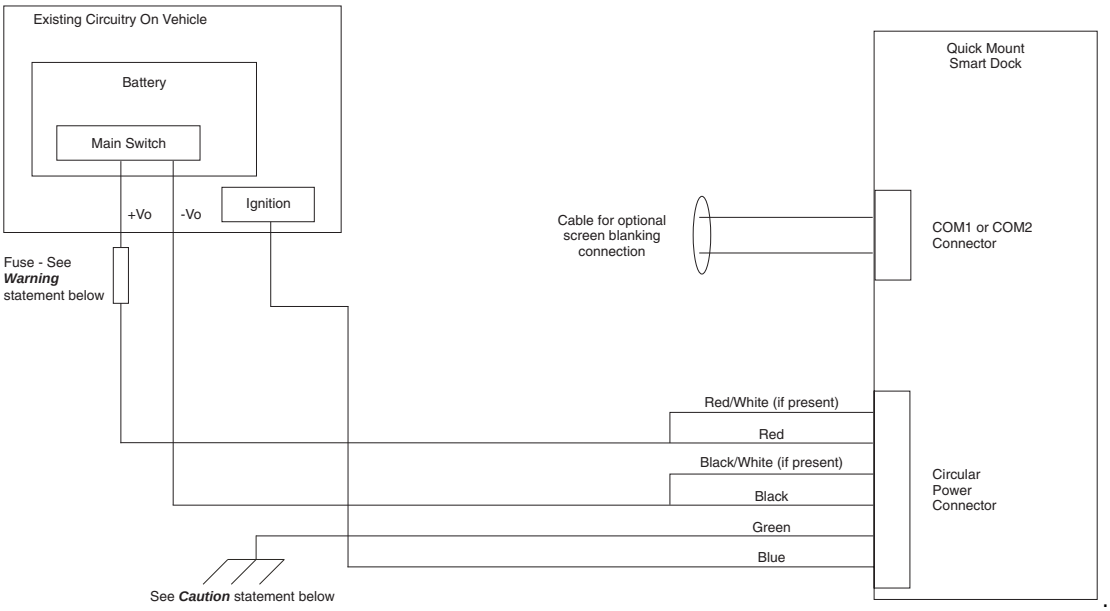

CAUTION
For battery powered vehicles:

- Red wire is connected to battery positive. If there is a red wire and a red/white wire, twist them together and connect to battery positive.
- Black wire must be connected to battery negative. If there is a black wire and a black/white wire, twist them together and connect to battery negative.
- Green wire must be connected to the vehicle chassis ground.

For internal combustion engine powered vehicles:

- Red wire is connected to battery positive. If there is a red wire and a red/white wire, twist them together and connect to battery positive.
- Black wire must be connected to battery negative. If there is a black wire and a black/white wire, twist them together and connect to battery negative.
- Green wire is connected to the vehicle chassis ground, which can also be battery negative.

Fuse Requirements

WARNING *- For proper and safe installation, the input power cable must be connected to a fused circuit on the vehicle. If the supply connection is made directly to the battery, the fuse should be installed in the positive lead within 5 inches (12.7 cm) of the battery's positive (+) terminal. Use VM3055FUSEKIT to install this fuse or use equivalent 20A fast blow fuse.*
Note: For North America, a UL Listed fuse is to be used.

Auto-On Control Wiring Diagram

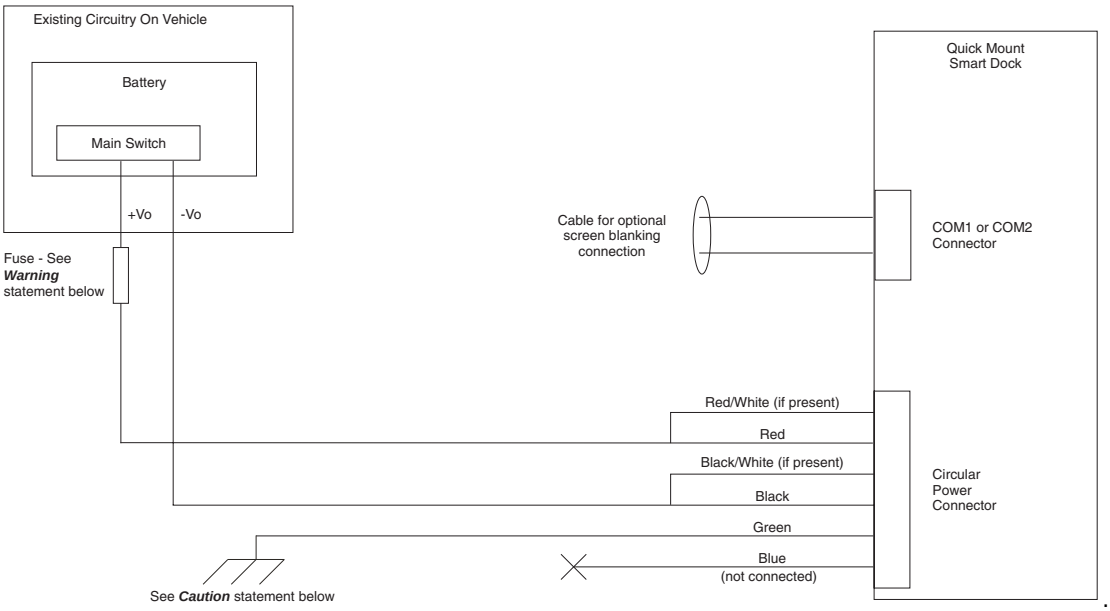

CAUTION
For battery powered vehicles:

- Red wire is connected to battery positive. If there is a red wire and a red/white wire, twist them together and connect to battery positive.
- Black wire must be connected to battery negative. If there is a black wire and a black/white wire, twist them together and connect to battery negative.
- Green wire must be connected to the vehicle chassis ground.

For internal combustion engine powered vehicles:

- Red wire is connected to battery positive. If there is a red wire and a red/white wire, twist them together and connect to battery positive.
- Black wire is connected to battery negative. If there is a black wire and a black/white wire, twist them together and connect to battery negative.
- Green wire is connected to the vehicle chassis ground, which can also be battery negative.

Fuse Requirements

WARNING *- For proper and safe installation, the input power cable must be connected to a fused circuit on the vehicle. If the supply connection is made directly to the battery, the fuse should be installed in the positive lead within 5 inches (12.7 cm) of the battery's positive (+) terminal. Use VM3055FUSEKIT to install this fuse or use equivalent 20A fast blow fuse.*
Note: For North America, a UL Listed fuse is to be used

Manual Control Wiring Diagram

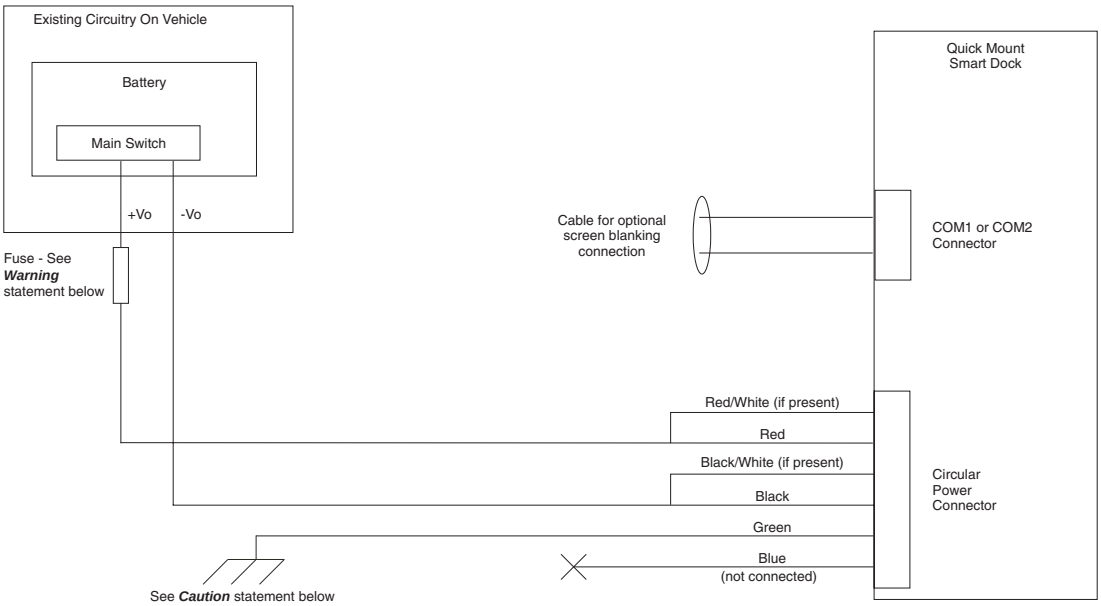

CAUTION
For battery powered vehicles:

- Red wire is connected to battery positive. If there is a red wire and a red/white wire, twist them together and connect to battery positive.
- Black wire must be connected to battery negative. If there is a black wire and a black/white wire, twist them together and connect to battery negative.
- Green wire must be connected to the vehicle chassis ground.

For internal combustion engine powered vehicles:

- Red wire is connected to battery positive. If there is a red wire and a red/white wire, twist them together and connect to battery positive.
- Black wire is connected to battery negative. If there is a black wire and a black/white wire, twist them together and connect to battery negative.
- Green wire is connected to the vehicle chassis ground, which can also be battery negative.

Fuse Requirements

WARNING *- For proper and safe installation, the input power cable must be connected to a fused circuit on the vehicle. If the supply connection is made directly to the battery, the fuse should be installed in the positive lead within 5 inches (12.7 cm) of the battery's positive (+) terminal. Use VM3055FUSEKIT to install this fuse or use equivalent 20A fast blow fuse.*
Note: For North America, a UL Listed fuse is to be used

60-144 VDC Vehicles (50-150 VDC Power Supply, Screws on Side of Lid)

This option requires DC/DC external power supply Honeywell Part no. 9000313PWRSPLY.

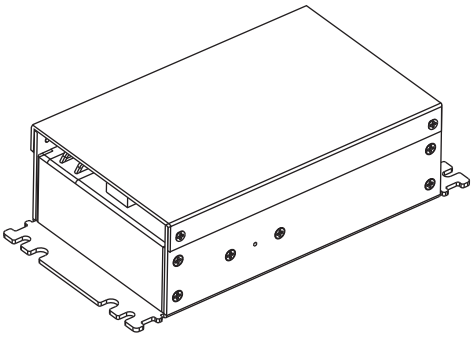

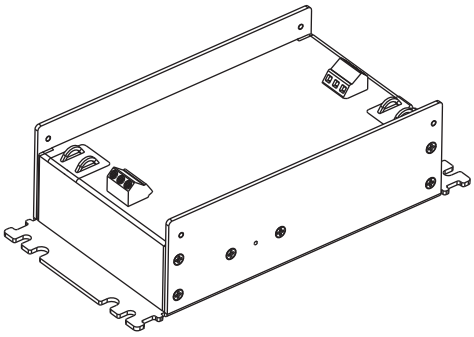

Shown With Lid Attached

- Lid is secured with screws on the side of lid.

Shown With Lid Removed

- Input and output connector blocks under lid.
- One positive (Vin+), negative (Vin-) and ground ( ) connection in input block.
- One positive (Vo+) and negative (Vo-) connection in output block.

If the DC/DC power supply does not have screws in the side of the lid, see 60-144 VDC Vehicles (50-150 VDC Power Supply, Screws on Top of Lid) (page 1-33).

CAUTION - For installation by trained service personnel only.

CAUTION - Usage in areas where moisture can affect the power supply connections should be avoided. The power supply should be mounted in a dry location within the vehicle or placed in a suitable protective enclosure.

Use caution when routing the power cable. See Power Cable Cautions (page 1-24).

Fuse Requirements

***WARNING** - For proper and safe installation, the input power cable must be connected to a fused circuit on the vehicle. If the supply connection is made directly to the battery, the fuse should be installed in the positive lead within 5 inches (12.7 cm) of the battery's positive (+) terminal. Use VM3055FUSEKIT to install this fuse or use equivalent 20A fast blow fuse.*
Note: For North America, a UL Listed fuse is to be used

Power Cable Identification

The power cable has a **right angle connector** and **6** wires:

Twist the red and red/white wires together and twist the black and black/white wires together before connecting to vehicle power.

Wire Color	Connection
Red (2 wires)	DC + (10-60 VDC)
Black (2 wires)	DC -
Green	Ground
Blue	Ignition Input (not used)

Note: Correct electrical polarity is required for safe and proper installation. See Wiring Diagram (page 1-32) *for additional wire color-coding specifics.*

The Thor VM3 DC input wires (Red, Red/White DC+ and Black, Black/White DC-) and the Blue ignition input wire are galvanically isolated. The Green ground input is used for electrostatic discharge (ESD) protection.

Vehicle 50-150VDC Power Connection

1. Please review the Wiring Diagram (page 1-32), before beginning power cable install.
2. The Thor VM3 must not be mounted in the Quick Mount Smart Dock. The power switch on the dock must be turned *Off*. The power cable must be UNPLUGGED from the dock.
3. Route the cable from the Thor VM3 to the DC/DC power supply. Route the power cable the shortest way possible. The cable is rated for a maximum temperature of 105°C (221°F). When routing this cable, it should be protected from physical damage and from surfaces that might exceed this temperature. Do not expose the cable to chemicals or oil that may cause the wiring insulation to deteriorate. Always route the cable so that it does not interfere with safe operation and maintenance of the vehicle.
4. Cut the cable to length and strip the wire ends.
5. Remove the lid from the DC/DC power supply.
6. Connect the stripped end of the positive wires (red and red/white twisted together or a single red wire) to the output block. See Power Cable Identification (page 1-30).

7. Connect the stripped end of the negative wires (black and black/white twisted together or a single black wire) to the output. See Power Cable Identification (page 1-30).

Note: The input block has VIN+, VIN- and GND terminals. The output block has VO+ and VO- terminals.

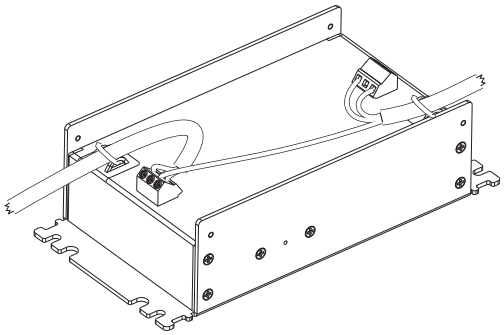

8. Connect the ground (green) wire from the Thor VM3 to the GND terminal on the input side of the DC/DC power supply.
9. Route the wiring from the DC/DC power supply to the vehicle's electrical system. **Do not connect to vehicle power at this time**.
10. Strip the wire ends and connect to the input side of the DC/DC power supply.
11. Use looms and wire ties to secure all wiring as shown.
12. Reattach the cover with the screws.
13. Connect the DC/DC power supply to the vehicle's electrical system as directed below:

For battery powered vehicles:
VIN+ is connected to battery positive.
VIN- must be connected to battery negative.
GND must be connected to the vehicle chassis ground.
For internal combustion engine powered vehicles:
VIN+ is connected to battery positive.
VIN- is connected to battery negative.
GND is connected to the vehicle chassis ground, which can also be battery negative.

14. While observing the Fuse Requirements (see page 1-33) connect the power cable as close as possible to the actual battery terminals of the vehicle. When available, always connect to unswitched terminals in the vehicle fuse panel, after providing proper fusing.

ATTENTION: For uninterrupted power, electrical supply connections should not be made at any point after the ignition switch of the vehicle.

15. Use proper electrical and mechanical fastening means for terminating the cable. Properly sized "crimp" type electrical terminals are an accepted method of termination. Select electrical connectors sized for use with 18AWG (1mm^2) conductors.
16. Provide mechanical support for the cable by securing it to the vehicle structure at approximately one foot intervals, taking care not to over tighten and pinch conductors or penetrate the outer cable jacket.
17. Connect the watertight connector end of the power cable to the Thor VM3 Quick Mount Smart Dock power connector by aligning the connector pins to the power connector; push down on the watertight connector and twist it to fasten securely.Flip the power switch on the back of the dock to On.
18. Secure the power cable to the Thor VM3 using the Strain Relief Cable Clamps (page 1-23).
19. Place Thor VM3 in the Dock (page 1-16)
20. If using the Screen Blanking (page 1-38) feature, install the screen blanking box or switch.
21. Press the Power Switch (page 3-4) on the back of the Thor VM3 dock.
22. Press the Power Button (page 3-4) on the front of the Thor VM3 to turn on the Thor VM3.

Note: Ignition control is not available for trucks over 60VDC.

Wiring Diagram

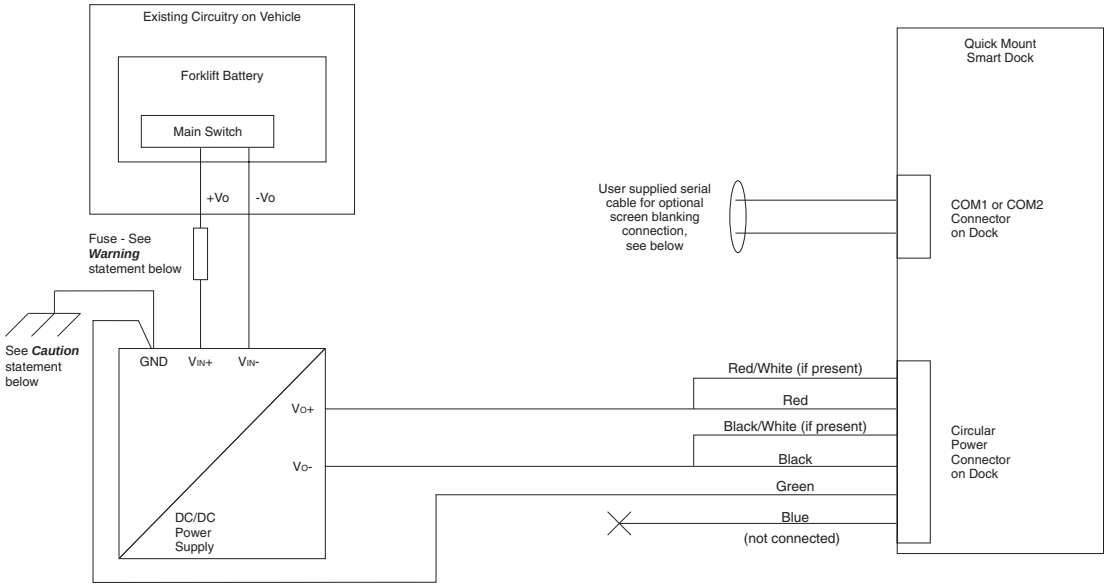

CAUTION
For battery powered vehicles:
GND must be connected to the vehicle chassis ground.
For internal combustion engine powered vehicles:
GND is connected to the vehicle chassis ground, which can also be battery negative.

Fuse Requirements

WARNING *- For proper and safe installation, the input power cable must be connected to a fused circuit on the vehicle. If the supply connection is made directly to the battery, the fuse should be installed in the positive lead within 5 inches (12.7 cm) of the battery's positive (+) terminal. Use VM3055FUSEKIT to install this fuse or use equivalent 20A fast blow fuse.*
Note: For North America, a UL Listed fuse is to be used.

60-144 VDC Vehicles (50-150 VDC Power Supply, Screws on Top of Lid)

This option requires DC/DC power supply Honeywell Part no. VX89303PWRSPLY, shown below.

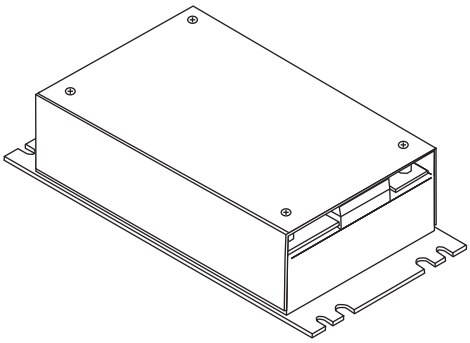

Shown With Lid Attached

- Lid is secured with screws on the top of lid.

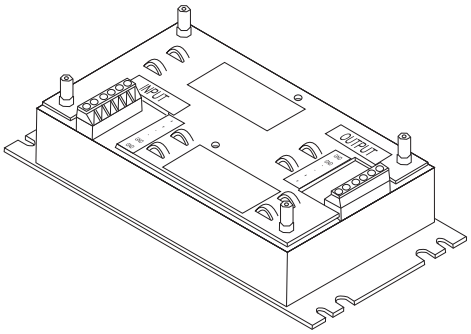

Shown With Lid Removed

- Input and output connector blocks under lid.
- Two positive (+), negative (-) and ground (⏚) connections per terminal block

If the DC/DC power supply does not have screws in the top of the lid, see 60-144 VDC Vehicles (50-150 VDC Power Supply, Screws on Side of Lid) (page 1-29).

CAUTION *- For installation by trained service personnel only.*

CAUTION *- The VX89303PWRSPLY power supply is sealed per IPXX. Usage in areas where moisture can affect the power supply connections should be avoided. The power supply should be mounted in a dry location within the vehicle or placed in a suitable protective enclosure.*

Use caution when routing the power cable. See *Power Cable Cautions* (page 1-24).

Fuse Requirements

WARNING *- For proper and safe installation, the input power cable must be connected to a fused circuit on the vehicle. If the supply connection is made directly to the battery, the fuse should be installed in the positive lead within 5 inches (12.7 cm) of the battery's positive (+) terminal. Use VM3055FUSEKIT to install this fuse or use equivalent 20A fast blow fuse.*
Note: For North America, a UL Listed fuse is to be used.

Power Cable Identification

The power cable has a **right angle connector** and **6** wires:

Twist the red and red/white wires together and twist the black and black/white wires together before connecting to vehicle power.

Wire Color	Connection
Red (2 wires)	DC + (10-60 VDC)
Black (2 wires)	DC -
Green	Ground
Blue	Ignition Input (not used)

Note: Correct electrical polarity is required for safe and proper installation. See *Wiring Diagram* (page 1-35) *for additional wire color-coding specifics.*

The Thor VM3 DC input wires (Red, Red/White DC+ and Black, Black/White DC-) and the Blue ignition input wire are galvanically isolated. The Green ground input is used for electrostatic discharge (ESD) protection.

Vehicle 50-150VDC Power Connection

1. Please review the Wiring Diagram (page 1-32), before beginning power cable install.
2. The Thor VM3 must not be mounted in the Quick Mount Smart Dock. The power switch on the dock must be turned *Off*. The power cable must be UNPLUGGED from the dock.
3. Route the cable from the Thor VM3 to the DC/DC power supply. Route the power cable the shortest way possible. The cable is rated for a maximum temperature of 105°C (221°F). When routing this cable, it should be protected from physical damage and from surfaces that might exceed this temperature. Do not expose the cable to chemicals or oil that may cause the wiring insulation to deteriorate. Always route the cable so that it does not interfere with safe operation and maintenance of the vehicle.
4. Cut the cable to length and strip the wire ends.
5. Remove the lid from the DC/DC power supply.
6. Connect the stripped end of the positive wires (red and red/white twisted together or a single red wire) to the output block. See Power Cable Identification (page 1-33).
7. Connect the stripped end of the negative wires (black and black/white twisted together or a single black wire) to the output. See Power Cable Identification (page 1-33).

Note: The input and output blocks each have two + (plus), two – (minus) and two ⏚ (ground) connectors. Either connector in the block can be used to connect the matching polarity wire.

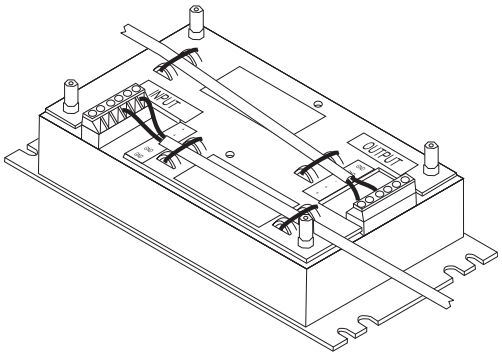

8. Route the wiring from the DC/DC power supply to the vehicle's electrical system. **Do not connect to vehicle power at this time**.
9. Strip the wire ends and connect to the input side of the DC/DC power supply.
10. Use looms and wire ties to secure all wiring as shown.
11. Reattach the cover with the screws.
12. Connect the DC/DC power supply to the vehicle's electrical system as directed below

For battery powered vehicles:
+ is connected to battery positive.
- must be connected to battery negative.:
⏚ must be connected to the vehicle chassis ground.
For internal combustion engine powered vehicles:
+ is connected to battery positive.
- is connected to battery negative.
⏚ is connected to the vehicle chassis ground, which can also be battery negative.

13. While observing the Fuse Requirements (see page 1-33), connect the power cable as close as possible to the actual battery terminals of the vehicle. When available, always connect to unswitched terminals in the vehicle fuse panel, after providing proper fusing.

ATTENTION: For uninterrupted power, electrical supply connections should not be made at any point after the ignition switch of the vehicle.

14. Use proper electrical and mechanical fastening means for terminating the cable. Properly sized "crimp" type electrical terminals are an accepted method of termination. Select electrical connectors sized for use with 18AWG (1mm^2) conductors.
15. Provide mechanical support for the cable by securing it to the vehicle structure at approximately one foot intervals, taking care not to over tighten and pinch conductors or penetrate the outer cable jacket.
16. Connect the watertight connector end of the power cable to the Thor VM3 Quick Mount Smart Dock power connector by aligning the connector pins to the power connector; push down on the watertight connector and twist it to fasten securely.Flip the power switch on the back of the dock to On.

17. Secure the power cable to the Thor VM3 using the Strain Relief Cable Clamps (page 1-23).
18. Place Thor VM3 in the Dock (page 1-16)
19. If using the Screen Blanking (page 1-38) feature, install the screen blanking box or switch.
20. Press the Power Switch (page 3-4) on the back of the Thor VM3 dock.
21. Press the Power Button (page 3-4) on the front of the Thor VM3 to turn on the Thor VM3.

Note: Ignition control is not available for trucks over 60VDC.

Wiring Diagram

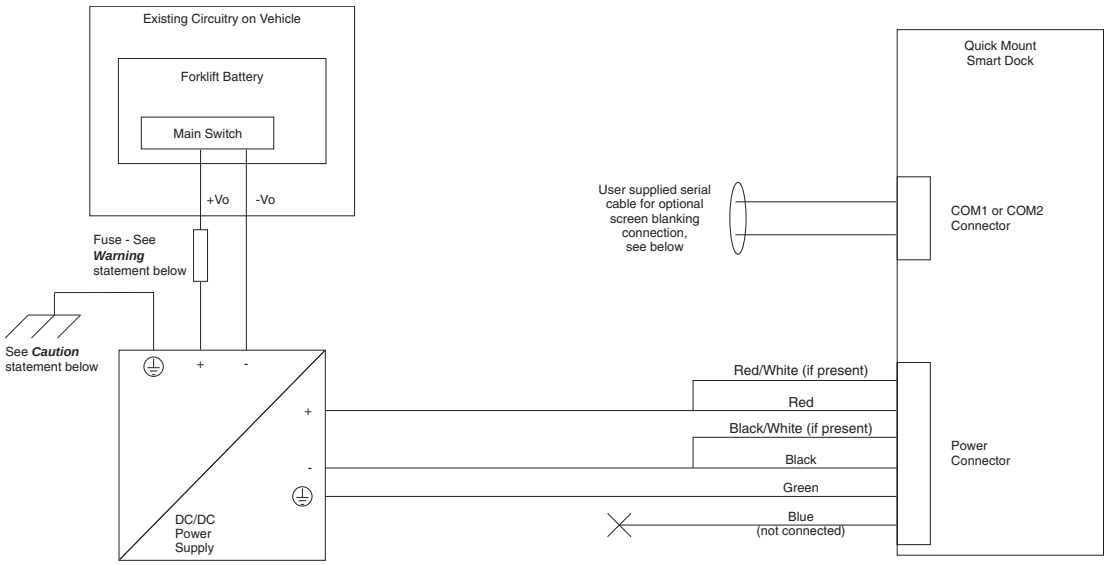

CAUTION
For battery powered vehicles:
⏚ must be connected to the vehicle chassis ground.
For internal combustion engine powered vehicles:
⏚ is connected to the vehicle chassis ground, which can also be battery negative.

Fuse Requirements
WARNING *- For proper and safe installation, the input power cable must be connected to a fused circuit on the vehicle. If the supply connection is made directly to the battery, the fuse should be installed in the positive lead within 5 inches (12.7 cm) of the battery's positive (+) terminal. Use VM3055FUSEKIT to install this fuse or use equivalent 20A fast blow fuse.*
Note: For North America, a UL Listed fuse is to be used.

VX6 / VX7 Adapter Cable

An adapter cable is available to attach the Thor VM3 to a vehicle previously equipped with a VX6/VX7 DC power cable. The adapter cable has a 5-pin connector to match with the VX6/VX7 power supply cable on one end and a 6-pin connector to match to the Thor VM3 on the other end. This section assumes the VX6/VX7 power cable is properly connected to vehicle power. Refer to the VX6 or VX7 Vehicle Mounting Reference Guide for details.

***CAUTION** - Because the Thor supports 10-60 VDC power input, **verify input voltages** before using this adapter cable with an existing VX6 or VX7 power connection installation.*

To Power Connector on Dock

To VX6/VX7 Power Supply Cable

When this adapter cable is used, there is no provision for an ignition switch input. Therefore the vehicle ignition monitoring function is not available when using this cable.

Connect to VX6 / VX7 Power Cable

1. Connect the cable to the Thor VM3 power cable by aligning the connector pins to the power connector; push down on the watertight connector and twist it to fasten securely.
2. The cable is rated for a maximum temperature of 105°C (221°F). Therefore, routing this cable it should be protected from physical damage and from surfaces that might exceed this temperature. Cable should be protected from physical damage from moving parts. Do not expose the cable to chemicals or oil that may cause the wiring insulation to deteriorate. Always route the cable so that it does not interfere with safe operation and maintenance of the vehicle.
3. Provide mechanical support for the cable by securing it to the vehicle structure at approximately one foot intervals, taking care not to over tighten and pinch conductors or penetrate outer cable jacket.
4. Connect the watertight connector end of the power cable to the Thor VM3 Quick Mount Smart Dock power connector by aligning the connector pins to the power connector; push down on the watertight connector and twist it to fasten securely.
5. Secure the power cable to the Thor VM3 using the Strain Relief Cable Clamps (page 1-23).
6. Place Thor VM3 in the Dock (page 1-16)
7. If using the Screen Blanking (page 1-38) feature, install the screen blanking box or switch.
8. Press the Power Switch (page 3-4) on the back of the Thor VM3 dock.
9. Press the Power Button (page 3-4) on the front of the Thor VM3 to turn on the Thor VM3.

Thor VX8 / Thor VX9 Adapter Cable

An adapter cable is available to attach the Thor VM3 to a vehicle previously equipped with a VX8/VX9 DC power cable. The adapter cable has a 6-pin connector to match the VX8/XVX9 power supply cable on one end and a 6-pin connector to match the Thor VM3 on the other end. The cable also has bare wires for ground and ignition sense connection plus a D9 cable to connect to a COM port on the Thor VM3 dock to provide a screen blanking signal. This section assumes the VX8/VX9 power cable is properly connected to vehicle power. Refer to the VX8 or VX9 Vehicle Mounting Reference Guide for details.

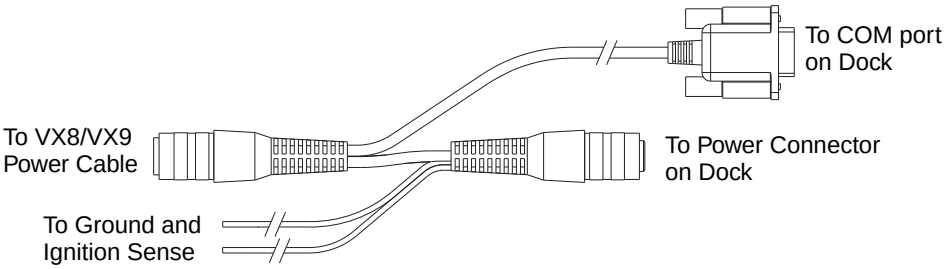

Connect to Thor VX8 / VX9 Power Cable

1. Connect the cable to the Thor VX8/VX9 power cable by aligning the connector pins to the power connector; push down on the watertight connector and twist it to fasten securely.

2. Connect the green wire to vehicle ground:

   For battery powered vehicles:
   The green wire must be connected to the vehicle chassis ground.
   For internal combustion engine powered vehicles:
   The green wire is connected to the vehicle chassis ground, which can also be battery negative.

3. If ignition control will be used, connect the blue wire to an ignition switched circuit (less than 1mA over input voltage range). If ignition control is not used, the blue wire can be left disconnected,

4. If the VX8/VX9 cable is connected to a screen blanking box or switch, connect the D9 connector to a COM port on the dock.

5. The cable is rated for a maximum temperature of 105°C (221°F). Therefore, when routing this cable it should be protected from physical damage and from surfaces that might exceed this temperature. Cable should be protected from physical damage from moving parts. Do not expose the cable to chemicals or oil that may cause the wiring insulation to deteriorate. Always route the cable so that it does not interfere with safe operation and maintenance of the vehicle.

6. Provide mechanical support for the cable by securing it to the vehicle structure at approximately one foot intervals, taking care not to over tighten and pinch conductors or penetrate outer cable jacket.

7. Connect the watertight connector end of the power cable to the Thor VM3 Quick Mount Smart Dock power connector by aligning the connector pins to the power connector; push down on the watertight connector and twist it to fasten securely.

8. Secure the power cable to the Thor VM3 using the Strain Relief Cable Clamps (page 1-23).

9. Place Thor VM3 in the Dock (page 1-16)

10. If using the Screen Blanking (page 1-38) feature, install the screen blanking box or switch if not previously installed.

11. Press the Power Switch (page 3-4) on the back of the Thor VM3 dock.

12. Press the Power Button (page 3-4) on the front of the Thor VM3 to turn on the Thor VM3.

Screen Blanking

Prerequisite: The steps outlined in either 12-48 VDC Vehicles (10-60 VDC Direct Connection) (page 1-25), 60-144 VDC Vehicles (50-150 VDC Power Supply, Screws on Side of Lid) (page 1-29) or 60-144 VDC Vehicles (50-150 VDC Power Supply, Screws on Top of Lid) (page 1-33) have been completed.

Screen blanking is accomplished by either a Screen Blanking Box or a user supplied switch.

CAUTION *- For installation by trained service personnel only.*

CAUTION - *For proper and safe installation, the input power lead to the Screen Blanking Box requires a 3 Amp maximum time delay (slow blow) high interrupting rating fuse. Note: For North America, a UL Listed fuse is to be used.*

Screen Blanking Cable

Refer to Screen Control (in the Windows Control Panel) to configure the Thor VM3 for screen blanking.

When routing any additional cables for screen blanking:

- Route the cable the shortest way possible removing any left-over cable
- Fuses and cabling are user supplied. Therefore, route these cables so they are protected from physical damage and from surfaces that might exceed the cable's rated temperature threshold.
- Cable should be protected from physical damage from moving parts
- Do not expose the cable to chemicals or oil that may cause the wiring insulation to deteriorate
- Always route the cable so that it does not interfere with safe operation and maintenance of the vehicle.
- Provide mechanical support for the cable by securing it to the vehicle structure at approximately one foot intervals, taking care not to over tighten and pinch conductors or penetrate outer cable jacket.

Honeywell Screen Blanking Box Cable

An optional Honeywell Screen Blanking Box Cable is available.

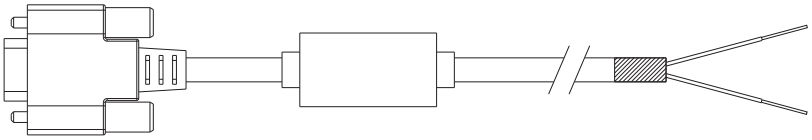

DB9 Female	Function with Screen Blanking Box	Wire color
1 -6, 9	Not Used	
7 (RTS)	Connected to Screen Blanking Box, unswitched side	Black (see note)
8 (CTS)	Connected to Screen Blanking Box, switched side	Gray (see note)

Note: Wire colors only apply to optional Honeywell Screen Blanking Box Cable, VM1080CABLE. Wire colors may vary in a user-supplied cable.

The optional Honeywell Screen Blanking Box Cable, VM1080CABLE, is installed as follows:

1. Connect the gray wire of the cable to the switched side of the Screen Blanking Box.
2. Connect the black wire of the cable to the unswitched side of the Screen Blanking Box.
3. Connect the D9 serial connector to either COM1 or COM2 serial port on the Thor VM3 Quick Mount Smart Dock.

User-Supplied Cable

A user-supplied cable can be used as well. Pins 7 and 8 must be connected as detailed below. No other pins are to be connected.

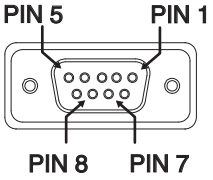

DB9 Female	Function with Screen Blanking Box	Function with Switch
1 -6, 9	Not Used	Not Used
7 (RTS)	Connected to Screen Blanking Box, unswitched side	Connected to Switch
8 (CTS)	Connected to Screen Blanking Box, switched side	Connected to Switch

The user-supplied cable is installed as follows:

1. Connect the wire from Pin 8 of the cable to the switched side of the Screen Blanking Box or to a user-supplied switch.
2. Connect the wire from Pin 7 of the cable to the unswitched side of the Screen Blanking Box or to a user-supplied switch.
3. Connect the D9 serial connector to either COM1 or COM2 serial port on the Thor VM3 Quick Mount Smart Dock.

Screen Blanking Box

Screen Blanking Box Terminal	Connection
12-xxV	Input from vehicle motion sensing circuitry. Please refer to label on Screen Blanking Box for allowable voltage input range.
GND	DC -
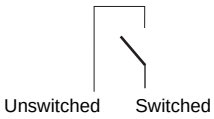	These two terminals are for connecting a serial cable: • If using an optional Honeywell screen blanking cable, VM1080CABLE, connect the *gray* wire to the *switched* side of the connection and connect the *black* wire to the *unswitched* side. • If using a user-supplied cable, the cable must be constructed so that Pin 7 (RTS) connects to *switched* side of the connection and Pin 8 (CTS) connects to the *unswitched* side.

It is assumed that the motion sensing circuitry in the illustrations below is powered by internal vehicle circuitry.

Please refer to the appropriate illustration below for Screen Blanking Box wiring diagrams.

CAUTION *- Do not exceed the maximum input voltage, either 60 or 72VDC, specified on the Screen Blanking Box label when using this configuration.*

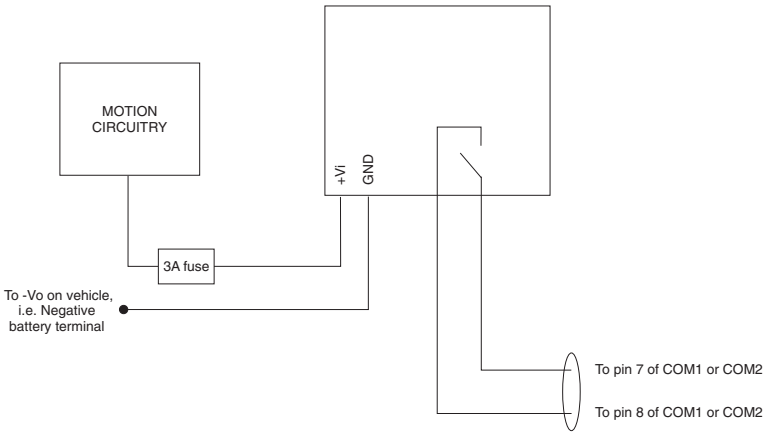

Note: The black and gray wire colors in the illustration only apply to the optional Honeywell Screen Blanking Box Cable, VM1080CABLE. The wire colors may be different in a user-supplied cable.

Screen Blanking with Switch

In applications where it is impractical to use the screen blanking box due to vehicle voltage or lack of a motion sensing signal, screen blanking can be controlled via a user supplied switch or relay that provides an electrical conductive connection on vehicle motion.

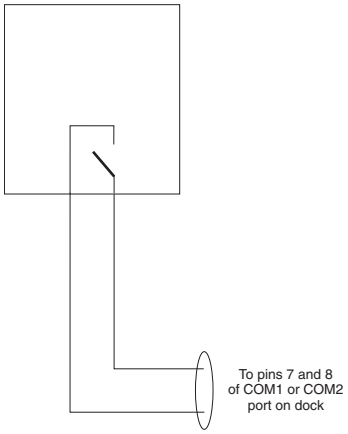

Pins 7 and 8 must be connected as shown in the illustration above. No other pins are to be connected.

External AC/DC Power Supply

The optional external AC/DC power supply is for use in environments, such as an office, where DC power is not available.

Note: The Honeywell-approved AC/DC Power Supply and Adapter Cable are only intended for use in a 25ºC (77ºF) maximum ambient temperature environment.

In North America, this unit is intended for use with a UL Listed ITE power supply with output rated 10 – 60 VDC, minimum 15W. Outside North America, this unit is intended for use with an IEC certified ITE power supply with output rated 10 – 60 VDC, minimum 15W.

The external power supply may be connected to either a 120V, 60Hz supply or, outside North America, to a 230V, 50Hz supply, using the appropriate detachable cordset. In all cases, connect to a properly grounded source of supply provided with maximum 15 Amp overcurrent protection (10 Amp for 230V circuits).

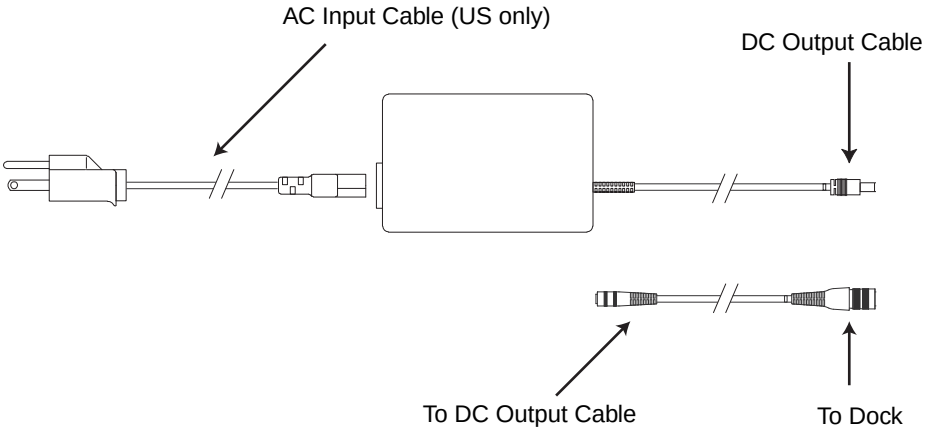

Connect External Power Supply

1. Connect the provided detachable cordset (US only, all others must order cable separately) to the external power supply (IEC 320 connector).
2. Plug cordset into appropriate, grounded, electrical supply receptacle (AC mains).
3. Connect the DC Output Cable end to the corresponding connector on the Adapter Cable.
4. Connect the watertight connector end of the Adapter Cable to the Thor VM3 Quick Mount Smart Dock Power Connector by aligning the connector pins to the power connector; push down on the watertight connector and twist it to fasten securely.
5. Press the Power Switch (page 3-4) on the back of the Thor VM3 dock.
6. Press the Power Button (page 3-4) on the front of the Thor VM3 to turn on the Thor VM3.

Connect USB Host

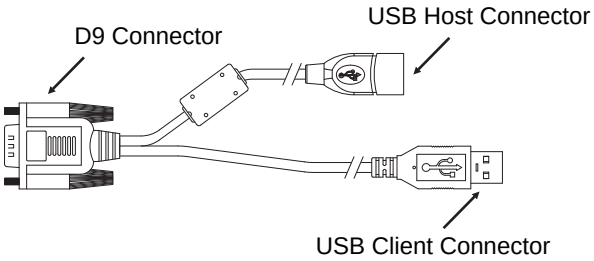

See USB Connector (page 5-6) for connector pinouts.

1. Seat the D9 connector firmly over the USB (or USB1) Connector on the Quick Mount Smart Dock.
2. Tighten the thumbscrews in a clockwise direction. Do not over tighten.
3. The USB-host connector provides a connector for a USB device such as a USB thumb drive.
4. Secure the cables to the Thor VM3 with Strain Relief Cable Clamps (page 1-23).

Connect USB Client

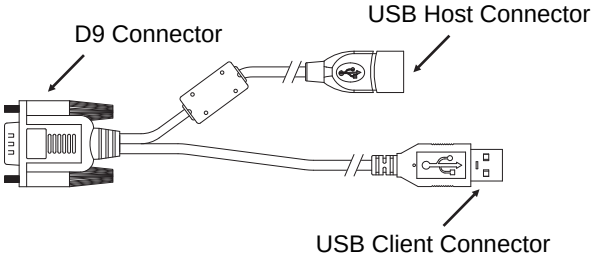

Connect Serial Device

See COM1 and COM2 Connector (page 5-5) for connector pinouts.

1. Seat the cable end connector firmly over the serial COM port on the Quick Mount Smart Dock.
2. Turn the thumbscrews in a clockwise direction. Do not over tighten.
3. Secure the cables to the Thor VM3 with Strain Relief Cable Clamps (page 1-23).
4. Connect the other cable end to the desired serial device.

Connect a Tethered Scanner

1. The scanner cable is attached to either the COM1 or COM2 port on the Quick Mount Smart Dock.
2. Connect the serial cable for the scanner as directed above.
3. When the Thor VM3 is powered on, it provides power to the serial scanner.
4. Configure the Data Collection (DC) Wedge to manipulate scanned data as desired.

Connect Headset Cable

The CANbus/Audio connector supports a headset adapter cable or a CANbus cable. The Thor VM3 does not support connecting audio and CANbus simultaneously.

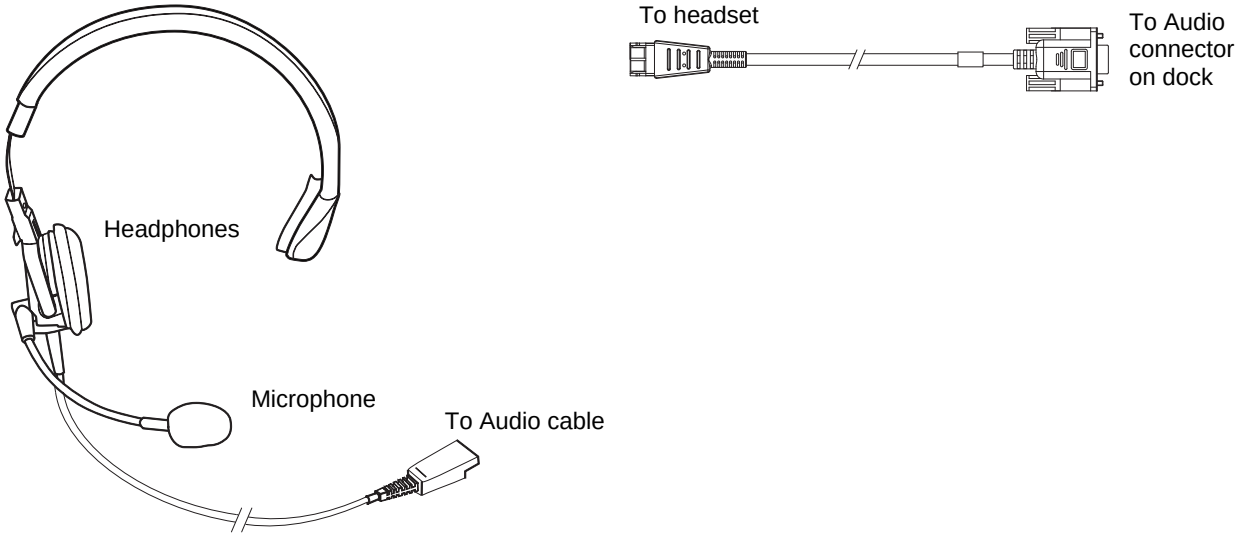

See CANbus / Audio Connector (page 5-9) for connector pinouts.

1. Seat the D15 cable end connector firmly over the CANbus/Audio Connector on the Quick Mount Smart Dock.
2. Tighten the thumbscrews in a clockwise direction. Do not over tighten.

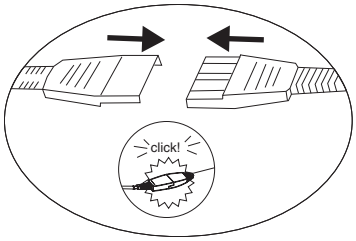

3. Slide the cable ends together until they click shut. Do not twist or bend the connectors. The Thor VM3 internal microphone and speakers are automatically disabled when the headset is connected.

Adjust Headset / Microphone and Secure Cable

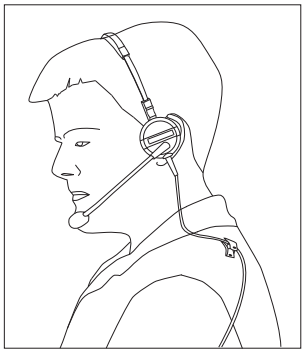

The headset consists of an earpiece, a microphone, a clothing clip and a cable.

1. Do not twist the microphone boom when adjusting the microphone. The microphone should be adjusted to be about two finger widths from your mouth.
2. Make sure the microphone is pointed at your mouth. Note the small “Talk” label near the mouthpiece. Make sure the Talk label is in front of your mouth. The microphone cable can be routed over or under clothing.
3. Follow the safety guidelines below when wearing the headset.

Under Clothing

- Leave the cable exposed only at the top of the collar.
- Be sure to leave a small loop of cable to allow movement of your head.

Over Clothing

- Use clothing clips to hold the cable close to your body.
- Tuck the cable under the belt, but leave a small loop where it goes under the belt.
- Do not wear the cable on the front of your body. It may get in your way or get caught on protruding objects.

Connect CANbus Cable

The CANbus/Audio connector supports a headset adapter cable or a CANbus Y cable. The Thor VM3 does not support connecting audio and CANbus simultaneously.

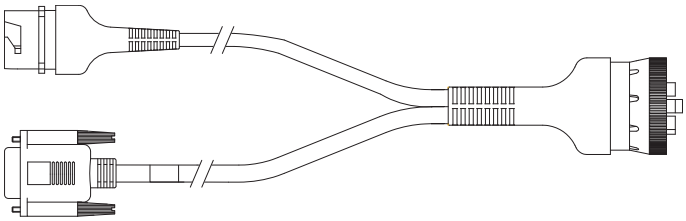

See CANbus / Audio Connector (page 5-9) for connector pinouts.

1. Seat the D15 cable end connector firmly over the CANbus/Audio Connector on the Quick Mount Smart Dock.
2. Tighten the thumbscrews in a clockwise direction. Do not over tighten.
3. The CANbus Y cable has a 9 pin F SAE J1939 (Deutsch) and 9 pin M SAE J1939 (Deutsch) connector. Connect the appropriate cable connector as needed.

Install Remote Antenna

Remote antennas are available for the 802.11 WLAN radio, the WWAN radio and the GPS.

802.11 Remote Mount Antenna

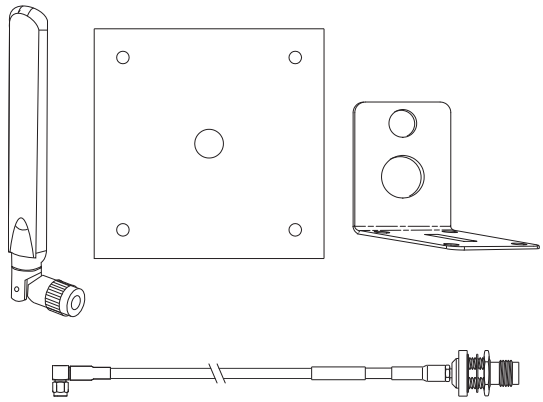

The Remote Antenna Installation Kit consists of two brackets (base plate and right angle), cable, and antenna. Tools are not included.

The desired remote antenna bracket is mounted on the top of a forklift, truck or other vehicle and cabled to the Thor VM3 inside the vehicle.

The Vehicle Remote Mount Antenna cannot be used by devices with an internal antenna.

Components and Mounting Diagram

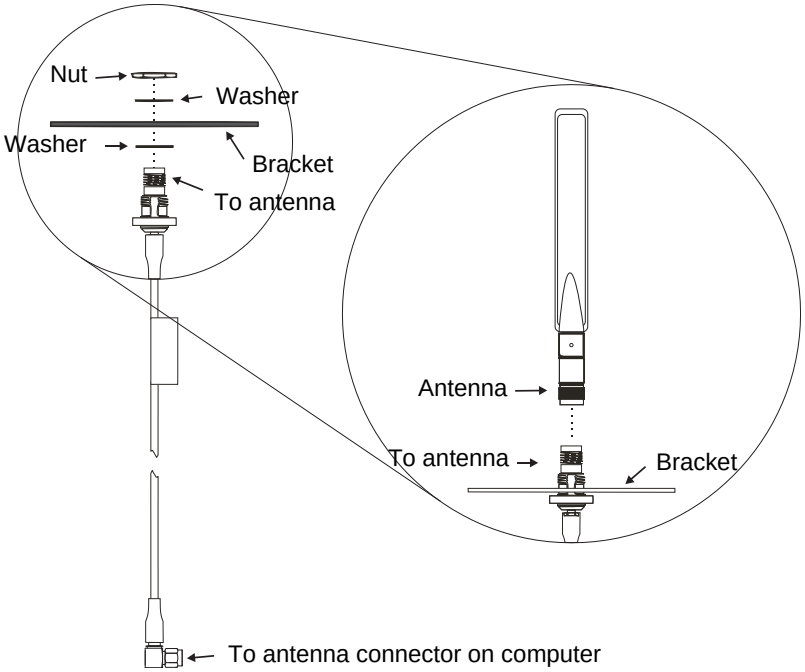

Typical Installation

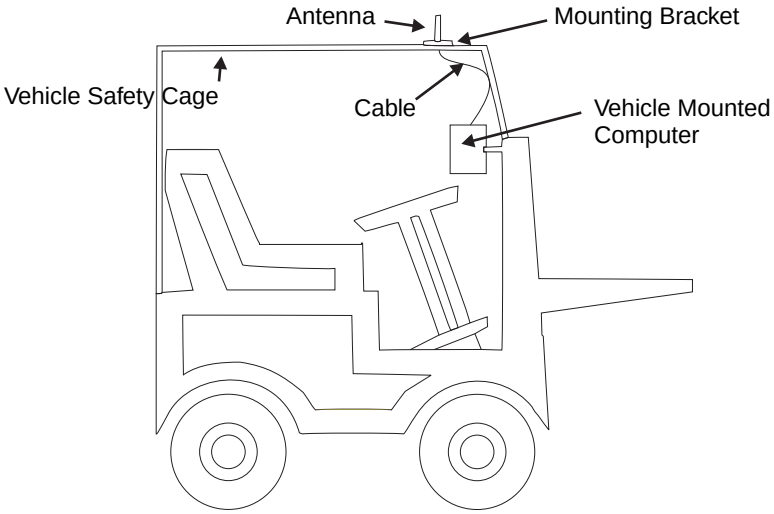

Mounting Instructions

1. Attach and secure the desired mounting bracket to the highest point on the safety cage, following these precautions:
   - The plate must be mounted so the antenna is not damaged while the vehicle or any of its parts are moving.
   - The antenna mounting portion of the bracket must be parallel to the floor.
   - If using two antennas, they must be mounted at least 12 inches (304.8mm) apart.
2. Attach the female connector of the coaxial cable to the antenna connector on the vehicle mounted Thor VM3.
3. Secure the whip antenna to the mounting bracket.
4. Connect the antenna cable to the whip antenna.
5. Use cable ties to secure the coaxial cable to the vehicle as necessary. Make sure the cable is routed so it is not damaged by any moving parts of the vehicle.
6. Connect the cable to the antenna connector (Wi-Fi Main or Wi-Fi Aux) on the Thor VM3. If only one antenna is used, be sure to connect it to the Wi-Fi Main connector.
7. Repeat the steps above for the second 802.11 antenna.

WAN Remote Mount Antenna

The WAN remote mount antenna can be either a magnetic mount or an adhesive mount antenna.

Magnetic Mount WAN Antenna

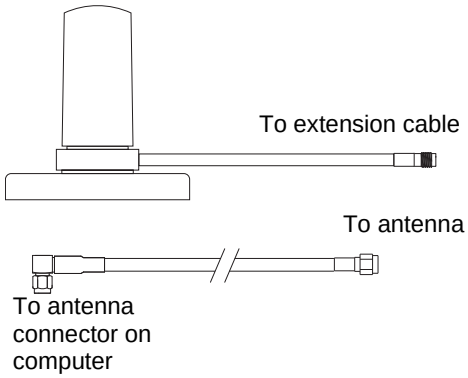

Adhesive Mount WAN Antenna

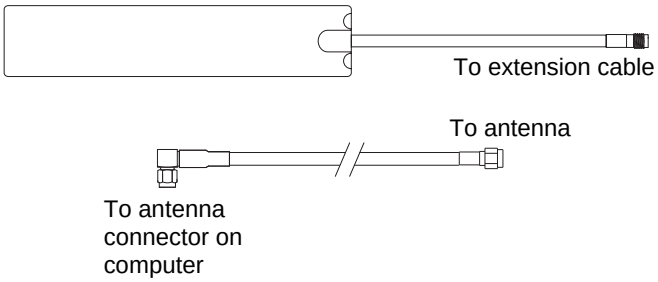

The Remote Antenna Installation Kit consists of the WAN antenna and an extension cable. The remote antenna is mounted on the top of a forklift, truck or other vehicle and cabled to the Thor VM3 inside the vehicle.

1. Locate a mounting position on highest point on the vehicle, following these precautions:
   - The antenna must be mounted so the antenna is not damaged while the vehicle or any of its parts are moving.
2. Clean the area where the antenna is to be mounted.
3. If using an adhesive mount antenna, remove the protective backing paper from the adhesive on the antenna.
4. Position the antenna on the vehicle.
5. Attach the one end of the coaxial cable to the antenna and the other end to the Mobile Net WWAN connector on the vehicle mounted Thor VM3.
6. Use cable ties to secure the coaxial cable to the vehicle as necessary. Make sure the cable is routed so it is not damaged by any moving parts of the vehicle.

GPS Remote Mount Antenna

The external GPS antenna is an adhesive mount antenna.

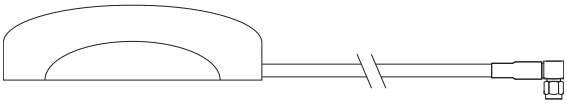

The Remote Antenna Installation Kit consists of the antenna and an integrated cable. The remote antenna is mounted on the top of a forklift, truck or other vehicle and cabled to the Thor VM3 inside the vehicle.

1. Locate a mounting position on highest point on the vehicle, following these precautions:
   - The antenna must be mounted so the antenna is not damaged while the vehicle or any of its parts are moving.
2. Clean the area where the antenna is to be mounted.
3. Remove the protective backing paper from the adhesive on the antenna and position the antenna on the vehicle.
4. Attach the connector on the coaxial cable to the GPS antenna connector on the vehicle mounted Thor VM3.
5. Use cable ties to secure the coaxial cable to the vehicle as necessary. Make sure the cable is routed so it is not damaged by any moving parts of the vehicle.

Apply Touch Screen Protective Film

The optional Thor VM3 touch screen protective film is shipped in packs of 10. The protective film is flexible and treated with an anti-glare coating on the outer surface.

The protective film is slightly larger than the Thor VM3 touch screen, however the notches on the edge of the protective film (indicated by the arrows) correspond to the display size of the Thor VM3. The protective film is not adhesive. The corner edges are designed to fit between the Thor VM3 display and the display housing to hold the protective film in place.

A protective backing is applied to the rear surface of the protective film. A pull tab is attached to the protective backing for easy removal of the protective backing from the film.

Installation

1. Make sure the touch screen is clean and dry before installation. See Cleaning (page 1-16) for instructions on suitable cleaning agents.
2. Pull the release tab to separate the protective backing from the rear of the protective film. Avoid touching the rear side of the protective film while removing the liner.
3. Place the rear side of the protective film against the Thor VM3 display, roughly centering the protective film over the display.
4. Slide the protective film until one corner can be slid back between the touch screen and the display housing as the protective film is re-centered on the display. It may be necessary to press the edges of the protective film against the display to ensure the entire edge slides under the display housing. It is easiest to start with one of the bottom corners.
5. Slide the protective film away from the other bottom corner. The film may bulge sligthly away from the Reference Guide as it is being slid. Only slide the protective film enough so that the protective film can slide under the display housing on that corner when the protective film is returned to center.
6. Repeat with each of the top corners, sliding the protective film away from the corner just enough that the protective film can slide under the display housing when the protective film is returned to center.
7. It may be necessary to flex the protective film during the install, however use care not to flex the protective film so much that the protective film kinks.
8. Once all corners are secure under the display housing, adjust the protective film, if necessary, so it is centered on the touch screen.

2 Software

Microsoft Windows Setup and Configuration

After the system files are processed, Microsoft Windows begins to load. Windows maintains a System Registry and INI files. Standard Windows configuration options apply to the Thor VM3. Configuration options are located in the System Tray or the Control Panel:

- The System Tray contains icons for adjusting the time, date or volume level.
- The Control Panel contains icons for many other configuration options, such as Power Management, Regional and Language Options, etc.
- The Control Panel icons are also used to add, delete or modify software installed on the Thor VM3.

Drive C Folder Structure

Microsoft Windows is installed in the \Windows folder. In addition, Microsoft Windows creates other folders and several subfolders. For more information on the folder structure, please refer to commercially available Microsoft Windows OS reference guides.

Software Loaded on Drive C

The software loaded on the Thor VM3 computer consists of:

- BIOS
- Microsoft operating system (Windows Embedded Standard 2009)
- device drivers
- radio software, see Summit Client Utility (page 3-1)
- touch screen software
- keyboard wedge software, see Freefloat Link*One Wedge (page 2-2)

The software installed on the Thor VM3 is summarized below.

Note: Due to the complex folder structure and System Registry under Microsoft Windows, software should not be removed manually. Instead use the Windows Control Panel:

Microsoft Windows

Microsoft Windows is installed in the \Windows subfolder, which is the Windows default. In addition, Windows places files in other folders and subfolders during installation. For more information, please refer to commercially available Microsoft Windows OS user guides.

Device Drivers

Device drivers are installed for all installed hardware options, such as the display, touch screen, radios, etc. For more information on Microsoft Windows device drivers, please refer to commercially available Windows OS reference guides.

Radio Software

The Thor VM3 is delivered with the radio software installed. Because the Thor VM3 uses a Microsoft Windows operating system, the radio installation includes Windows device drivers.

Touch Screen Software

PenMount Universal software is installed for calibrating the touch screen. See Touch Screen Calibration (page 2-24) for more information.

RFTerm

Start > All Programs > Honeywell RFTerm

Optional terminal emulation software. The application can also be accessed by double-clicking the RFTerm desktop icon.

Summit Client Utility

Start > Control Panel > Wi-Fi

Manage wireless clients installed in the Thor VM3.

*Freefloat Link*One Wedge*

Link*One bar code decoder configuration software is installed on the Thor VM3. A pdf User's Manual for Link*One is included as part of the installation at C:\Program Files\Freefloat\Freefloat Link One. Refer to this manual or the Freefloat website for information on configuring and using Link*One.

*Freefloat Access*One TE (Optional)*

Access*One terminal emulation software is available on the Thor VM3. A pdf User's Manual for Access*One is included as part of the installation at C:\Program Files\Freefloat\Freefloat Access One. Refer to this manual or the Freefloat website for information on configuring and using Access*One.

Control Panel

Most control panel applets on the Thor VM3 are standard Microsoft Windows items.

The control panels and other functions listed below may differ from a standard Microsoft Windows equipped PC or laptop.

About

Software

Firmware Versions

The Software tab lists the firmware versions installed. The BIOS, EC and Screen MCU firmware versions are shown on this tab.

Language

The Software tab displays the localized language version of the OS image. The language is identified as English or + an additional language.

The Thor VM3 may be pre-loaded with an English only OS. Contact Technical Assistance (page 6-1) for information on ordering a recovery DVD with an additional language.

Versions

The Versions tab displays the versions of many of the software programs installed. Not all installed software is included in this list and the list varies depending on the applications loaded on the Thor VM3. The Image line displays the revision of the system software installed. Refer to the last three digits to determine the revision level.

Versions Tab and the Registry

The Versions tab displays program version details from the registry.

Customized information can be displayed by modifying the Registry using the Registry Editor. Use caution when editing the Registry and make a backup copy of the registry before changes are made.

The registry settings for the Version tab are under HKEY_LOCAL_MACHINE \ Software \ LXE \ Version in the registry.

To add a user application to the Version panel, create a new string value under the HKLM\Software\LXE\Version key. The string name should be the Application name to appear in the Version window. The data for the value should be the version number to appear in the Version window.

Version strings can be equal to or less than 254 characters. Because the strings are displayed in a text box, any number can be accommodated, up to the 64K byte text box limitation.

Network IP

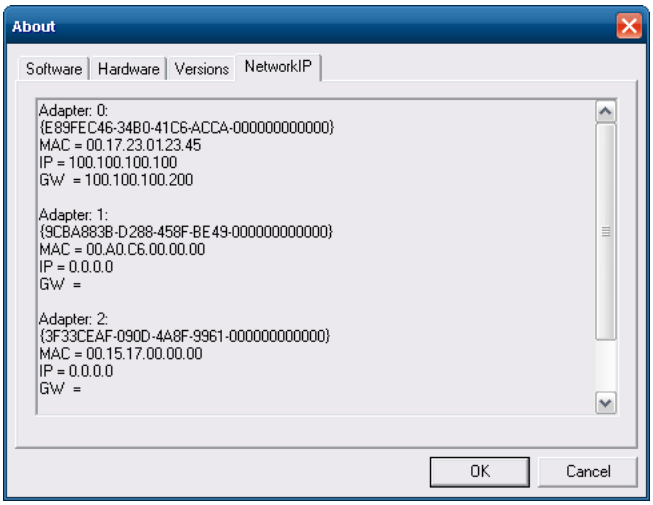

MAC Address

The Network IP tab displays the MAC address of the network card(s) such as the Summit WLAN radio and the Bluetooth module.

Bluetooth

Start > Control Panel > Bluetooth

Discover and manage pairing with nearby Bluetooth devices.

Factory Default Settings

Discovered Devices	None
Settings	
Turn off Bluetooth	Disabled
Computer is connectable	Enabled
Computer is discoverable	Disabled
Prompt if devices request to pair	Enabled
Continuous search	Disabled
Filtered Mode	Enabled
Printed Port - COM7:	Disabled (unchecked) by default in both Filtered and Non Filtered Modes. The option is dimmed in Non Filtered Mode.
Logging	Disabled
Computer friendly name	System Computer Description
Reconnect	
Report when connection lost	Enabled
Report when reconnected	Disabled
Report failure to connect	Enabled
Clear Pairing Table on Boot	Disabled
Auto Reconnect on Boot	Enabled
Auto Reconnect	Enabled

Bluetooth taskbar Icon state and Bluetooth device Icon states change as Bluetooth devices are discovered, paired, connected and disconnected. There may be audible or visual signals as paired devices re-connect with the Thor VM3.

- The default Bluetooth setting is On.
- The Thor VM3 cannot be discovered by other Bluetooth devices when the **Computer is discoverable** option is disabled (unchecked) on the Settings panel.
- Other Bluetooth devices cannot be discovered if they have been set up to be Non-Discoverable or Invisible.
- When **Filtered Mode** is enabled, the Thor VM3 can pair with one Bluetooth scanner and one Bluetooth printer.
- When **Filtered Mode** is disabled, the Thor VM3 can pair with up to four Bluetooth devices.
- It is not necessary to disconnect a paired scanner and printer before a different scanner or printer is paired with the Thor VM3.
- The target Bluetooth device should be as close as possible (up to 32.8 ft (10 meters) Line of Sight) to the Thor VM3 during the pairing process.

Assumption: The System Administrator has Discovered and Paired targeted Bluetooth devices for the Thor VM3. The Thor VM3 operating system has been upgraded to the revision level required for Bluetooth client operation. An application (or API) is available that will accept data from serial Bluetooth devices.

Bluetooth Devices

The Bluetooth Devices tab displays any device previously discovered and paired with the Thor VM3.

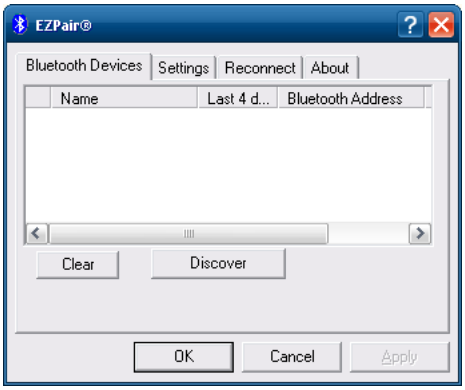

Discover

Tap the Discover button to locate all discoverable Bluetooth devices in the vicinity. The Discovery process also queries for the unique identifier of each device discovered.

Stop Button

Tap Stop at any time to end the Discover and Query for Unique Identifier functions.

Note: When an active paired device enters Suspend Mode, is turned Off or leaves the Thor VM3 Bluetooth scanning range, the Bluetooth connection between the paired device and the Thor VM3 is lost. There may be audible or visual signals as paired devices disconnect from the Thor VM3.

Bluetooth Device List

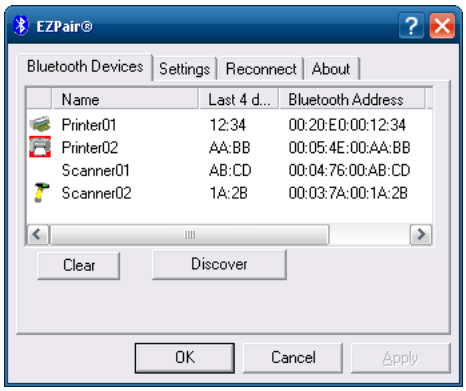

The discovered paired devices may or may not be identified with an icon. Discovered devices without an icon can be paired. The Bluetooth panel assigns an icon to the device name.

An icon with a red background indicates the device's Bluetooth connection is inactive.

An icon with a white background indicates the device is connected to the Thor VM3 and the device's Bluetooth connection is active.

Double-tap a device in the list to open the device properties menu. The target device does not need to be active.

Clear Button

Deletes all devices from the Device table that are not currently paired. A dialog box is presented, “Delete all disconnected devices?” Tap the **Yes** button to remove disconnected or deleted devices from the device table. The devices are removed from the Device table after closing and reopening the Bluetooth window. Tap the **No** button to make no changes.

Bluetooth Device Menu

Prerequisite: The Discover button has been clicked and there are Bluetooth devices listed.

Click on a device in the list to highlight it. Double-click the highlighted device to display the Bluetooth Device **right-click menu** as shown below. The Bluetooth device does not need to be active.

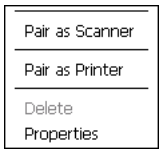

Right-Click Menu Options

Pair as Scanner	Receive data from the highlighted Bluetooth scanner or Bluetooth imager.
Pair as Printer	Send data to the highlighted Bluetooth printer.
Disconnect	Stop the connection between the Thor VM3 and the highlighted paired Bluetooth device.
Delete	Remove an unpaired device from the Bluetooth device list. The highlighted device name and identifier is removed from the Thor VM3 Bluetooth Devices panel after the user taps OK.
Properties	More information on the highlighted Bluetooth device.

Bluetooth Device Properties

Data on the Bluetooth Properties panel cannot be changed by the user. The data displayed is the result of the device Query performed during the Discovery process.

The Status dialog box reflects the current state of the highlighted device.

Settings

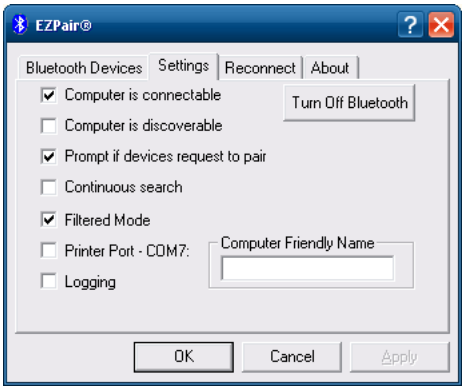

Note: These options can still be checked or unchecked whether Bluetooth connection is enabled or disabled.

Turn Off Bluetooth

Tap the button to toggle the Bluetooth client On or Off. The button title changes from *Turn Off Bluetooth* to *Turn On Bluetooth*.

Default

The default value is Bluetooth On.

Options

Option	Information
Computer is connectable	This option is Enabled by default. Disable this option to inhibit Thor VM3 connection initiated by a Bluetooth scanner.
Computer is discoverable	This option is Disabled by default. Enable this option to ensure other devices can discover the Thor VM3.

Option	Information
Prompt if devices request to pair	This option is Enabled by default. A dialog box appears on the Thor VM3 screen notifying the user a Bluetooth device requests to pair with the Thor VM3. The requesting Bluetooth device does not need to have been Discovered by the Thor VM3 before the pairing request is received. Tap the Accept button or the Decline button to remove the dialog box from the screen. In some cases, if a Bluetooth device is already paired this setting cannot be changed. If this is the case, an error message is displayed and the option is not changed. The Bluetooth device must be disconnected before changing this setting.
Continuous Search	This option is Disabled by default. When enabled, the Bluetooth connection never stops searching for a device it has paired with when the connection is broken (such as the paired device entering Suspend mode, going out of range or being turned off). When disabled, after being enabled, the Thor VM3 stops searching after 30 minutes.
Filtered Mode	This option is Enabled by default. Determines whether the Bluetooth client discovers and displays all serial Bluetooth devices in the vicinity (Filtered Mode is disabled/unchecked) or the discovery result displays Bluetooth scanners and printers only (Filtered Mode is enabled/checked). When Filtered Mode is disabled, the Thor VM3 can pair with up to four Bluetooth devices. A Restart is required every time Filtered Mode is toggled on and off. When in non-filtered mode, the Thor VM3 supports SPP only.
Printer Port - COM9	This option is Disabled by default. This option assigns Bluetooth printer connection to COM9 instead of COM19. To enable this option, Filtered Mode must be enabled.
Logging	This option is Disabled by default. When logging is enabled, the Thor VM3 creates **bt_log.txt** and stores it in the C:/Program Files\LXE\Bluetooth folder. Bluetooth activity logging is added to the text file as activity progresses. A **bt_log_bak.txt** file contains the data stored by **bt_log.txt** prior to reboot. During a reboot process, the Thor VM3 renames **bt_log.txt** to **bt_log_bak.txt**. If a file already exists with that name, the existing file is deleted, the new **bt_log_bak.txt** file is added and a new **bt_log.txt** is created.
Computer Friendly Name	Default: Computer description (Control Panel > System > Computer Name tab). The name, or identifier, entered in this space by the System Administrator is used exclusively by Bluetooth devices and during Bluetooth communication. The Computer Description field is blank by default, so unless this field is modified before Bluetooth is installed, Computer Friendly Name is also blank, but can be edited by the user.

Reconnect

Note: These options can still be checked or unchecked whether Bluetooth connection is enabled or disabled.

Options

Option	Function
Report when connection lost	This option is Enabled (checked) by default. There may be an audio or visual signal when a connection between a paired, active device is lost. A visual signal may be a dialog box placed on the display notifying the user the connection between one (or all) of the paired Bluetooth devices has stopped. Tap the ok button to remove the dialog box from the screen.
Report when reconnected	This option is Disabled (unchecked) by default. There may be an audio or visual signal when a connection between a paired, active device is made. A visual signal may be a dialog box placed on the display notifying the user the connection between one (or all) of the paired Bluetooth devices has resumed. Tap the ok button to remove the dialog box from the screen.
Report failure to reconnect	This option is Enabled (checked) by default. The default time delay is 30 minutes. This value cannot be changed by the user. There may be an audio or visual signal when a connection between a paired, active device fails to re-connect. A visual signal may be a dialog box placed on the display notifying the user the connection between one (or all) of the previously paired Bluetooth devices has failed. Tap the X button or ok button to close the dialog box. Possible reasons for failure to reconnect: Timeout expired without reconnecting; attempted to pair with a device that is currently paired with another device; attempted to pair with a known device that moved out of range or was turned off; attempted to pair with a known device but the reason why reconnect failed is unknown.
Clear Pairing Table on Boot	This option is Disabled (unchecked) by default. When enabled (checked), all previous paired information is deleted upon any reboot sequence and no devices are reconnected. When enabled (checked) “Auto Reconnect on Boot” is automatically disabled (dimmed).
Auto Reconnect on Boot	This option is Enabled (checked) by default. All previously paired devices are reconnected upon any reboot sequence. When disabled (unchecked), no devices are reconnected upon any reboot sequence.

Option	Function
Auto Reconnect	This option is Enabled (checked) by default. This option controls the overall mobile Bluetooth device reconnect behavior. When Auto Reconnect is disabled (unchecked), **Auto Reconnect on Boot** is automatically disabled and dimmed. When Auto Reconnect is disabled (unchecked), no devices are reconnected in any situation. The status of **Auto Reconnect on Boot** is ignored and no devices are reconnected on boot. The status of **Clear Pairing Table on Boot** controls whether the pairing table is populated on boot. When Auto Reconnect is enabled (checked) and **Auto Reconnect on Boot** is disabled (unchecked), devices are not reconnected on boot, but are reconnected in other situations (example: return from out-of-range). When Auto Reconnect is enabled (checked) and **Clear Pairing Table on Boot** is enabled (checked), devices are not reconnected on boot, but are reconnected in other situations (example: return from out-of-range). The pairing table is cleared on boot. The status of **Auto Reconnect on Boot** is ignored and the option is automatically disabled (unchecked) and dimmed.

About

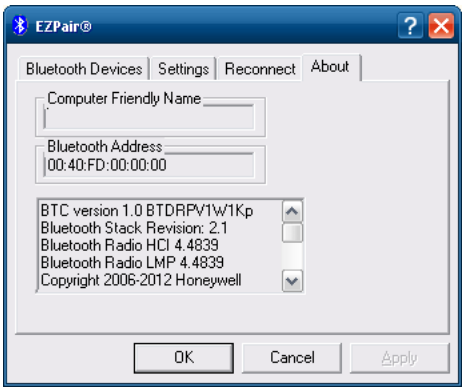

This panel lists the assigned Computer Friendly Name (that other devices may discover during their Discovery and Query process), the Bluetooth MAC address, and software version levels. The data cannot be edited by the user.

Using Bluetooth

Start > Control Panel > Bluetooth or Bluetooth icon in taskbar or Bluetooth icon on desktop

Tap the Bluetooth icon in the taskbar to open the Bluetooth EZPair application.

or

The Thor VM3 default Bluetooth setting is Enabled.

The Thor VM3 Bluetooth® module is designed to Discover and pair with nearby Bluetooth devices.

Prerequisite: The remote Bluetooth devices have been setup to allow them to be “Discovered” and “Connected/ Paired”. The System Administrator is familiar with the pairing function of the remote Bluetooth devices.

Bluetooth Devices Display - Before Discovering Devices

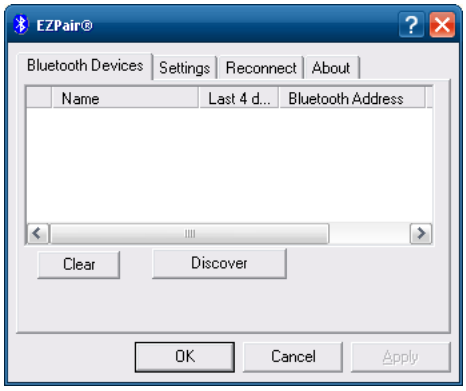

*Note: When **Filtered Mode** is enabled, only Bluetooth printers or Bluetooth scanners/imagers are recognized and displayed in the Bluetooth panel. All other Bluetooth devices are ignored.*

Initial Configuration

1. Select **Start > Control Panel > Bluetooth** or tap the Bluetooth icon in the taskbar or on the desktop.
2. Tap the **Settings** Tab.
3. Change the **Computer Friendly Name** at the bottom of the Settings display. The Bluetooth Thor VM3 default name is the Computer Description. Honeywell strongly urges assigning every Thor VM3 a unique name (up to 32 characters) before Bluetooth Discovery is initiated.
4. Check or uncheck the Thor VM3 Bluetooth options on the **Settings** tab.
5. Tap the **OK** button to save your changes or the **X** button to discard any changes.

Subsequent Use

Note: Taskbar and Bluetooth device Icon states change as Bluetooth devices are discovered, paired, connected and disconnected. A taskbar Bluetooth icon with a red background indicates Bluetooth is active and not paired with any device. A device icon with a red background indicates a disconnected paired device.

1. Tap the Bluetooth icon in the taskbar or on the desktop to open the Bluetooth EZPair application.
2. Tap the Bluetooth Devices tab.
3. Tap the Discover button. When the Bluetooth module begins searching for in-range Bluetooth devices, the button name changes to Stop. Tap the Stop button to cancel the Discover function at any time.
4. The discovered devices are listed in the Bluetooth Devices window.
5. Highlight a Bluetooth device in the Discovered window and double-tap to open the device properties menu.
6. Tap Pair as Scanner to set up the Thor VM3 to receive scanner data.

7. Tap Pair as Printer to set up the Thor VM3 to send data to the printer.

8. Tap Disconnect to stop pairing with the device. Once disconnected, tap Delete to remove the device name and data from the Thor VM3 Bluetooth Devices list. The device is deleted from the list after the OK button is clicked.

9. Upon successful pairing, the selected device may react to indicate a successful connection. The reaction may be an audio signal from the device, flashing LED on the device, or a dialog box is placed on the Thor VM3 display.

10. Whenever the Thor VM3 is turned On, all previously paired, live, Bluetooth devices in the vicinity are paired, one at a time, with the Thor VM3. If the devices cannot connect to the Thor VM3 before the re-connect time-out time period expires (default is approximately 20 seconds for each paired device) there is no indication of the continuing disconnect state if **Report Failure to Reconnect** is disabled.

Bluetooth Indicators

The Bluetooth taskbar Icon state changes as Bluetooth devices are discovered, paired, connected and disconnected.

There may be audible or visual signals as paired devices re-connect with the Thor VM3.

Taskbar Icon	Legend
	Thor VM3 is connected to one or more of the targeted Bluetooth device(s).
	Thor VM3 is not connected to any Bluetooth device. Thor VM3 is ready to connect with any Bluetooth device. Thor VM3 is out of range of all paired Bluetooth device(s). Connection is inactive.

Note: When an active paired device enters Suspend Mode, is turned Off or leaves the Thor VM3 Bluetooth scan range, the Bluetooth connection between the paired device and the Thor VM3 is lost. There may be audible or visual signals as paired devices disconnect from the Thor VM3.

Bluetooth LED	Legend
Blue, blinking slowly	Bluetooth is active but not connected to a device.
Blue, blinking medium	Bluetooth is paired and connected to a device.
Blue, blinking fast	Bluetooth is discovering other Bluetooth devices.
Off	Bluetooth hardware has been turned off or does not exist in the Thor VM3.

Bluetooth Bar Code Reader Setup

Please refer to the Bluetooth scanner manufacturer's User Guide; it may be available on the manufacturer's web site. Contact for Bluetooth product assistance.

Honeywell supports several different types of bar code readers. This section describes the interaction and setup for a mobile Bluetooth laser scanner or laser imager connected to the Thor VM3 using Bluetooth functions.

Prerequisites

- If the Thor VM3 has a Bluetooth address identifier bar code label affixed, then Bluetooth hardware and software is installed.
- The mobile Bluetooth laser scanner / laser imager battery is fully charged.
- The Thor VM3 is connected to AC or DC (vehicle) power.
- **Important**: The bar code numbering examples in this segment are not real and should not be created nor scanned with a Bluetooth scanner.
- To open the EZPair program, tap **Start > Control Panel > Bluetooth** or tap the Bluetooth icon on the desktop or tap the Bluetooth icon in the taskbar.

LnkB00440fd01020 - Sample

Locate the bar code label, similar to the one shown above, attached to the Thor VM3. The label is the Bluetooth address identifier for the Thor VM3.

The mobile Bluetooth scanner / imager requires this information before discovering, pairing, connecting or disconnecting can occur.

Important: The Thor VM3 Bluetooth address identifier label should remain protected from damage (rips, tears, spills, soiling, erasure, etc.) at all times. It may be required when pairing, connecting, and disconnecting new Bluetooth bar code readers.

Thor VM3 with Label

If the Thor VM3 has a Bluetooth address bar code label attached, follow these steps:

1. Scan the Bluetooth address bar code label, attached to the Thor VM3, with the Bluetooth mobile scanner.
2. If this is the first time the Bluetooth scanner has scanned the Thor VM3 Bluetooth label, the devices are paired. See section titled Bluetooth Beep and LED Indications (page 2-15). If the devices do not pair successfully, go to the next step.
3. Open the EZPair panel (**Start > Control Panel > Bluetooth**).
4. Tap Discover. Locate the Bluetooth scanner in the Discovery panel.
5. Double-tap the stylus on the Bluetooth scanner. The right-mouse-click menu appears.
6. Select Pair as Scanner to pair the Thor VM3 with the Bluetooth mobile scanner.

The devices are paired. The Bluetooth bar code reader responds with a series of beeps and an LED flashes. Refer to the following section titled Bluetooth Beep and LED Indications (page 2-15).

Note: After scanning the Thor VM3 Bluetooth label, if there is no beep and no LED flash from the Bluetooth device, the devices are currently paired.

Thor VM3 without Label

If the Thor VM3 Bluetooth address bar code label does not exist, follow these steps to create a unique Bluetooth address bar code for the Thor VM3:

First, locate the Thor VM3 Bluetooth address by tapping **Start > Control Panel > Bluetooth > About** tab.

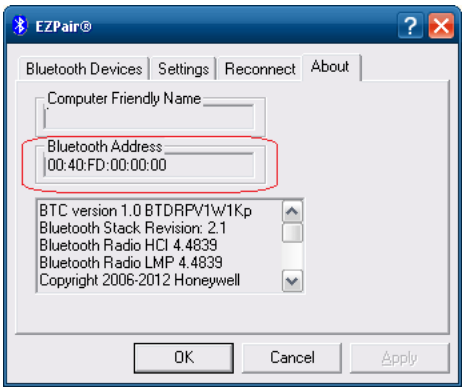

Next, create a Bluetooth address bar code label for the Thor VM3.

The format for the bar code label is as follows:

- Bar code type must be Code 128.
- FNC3 character followed by string Uppercase L, lowercase n, lowercase k, uppercase B and then the Bluetooth address (12 hex digits, no colons). For example, LnkB0400fd002031.

Create and print the label.

Scan the Thor VM3 Bluetooth address bar code label with the Bluetooth bar code reader.

The devices are paired. The Bluetooth bar code reader responds with a series of beeps and LED flashes.

Note: After scanning the Thor VM3 Bluetooth label, if there is no beep and no LED flash from the Bluetooth bar code reader, the devices are currently paired.

See Bluetooth Beep and LED Indications (page 2-15).

Bluetooth Beep and LED Indications

Beep Type from Bluetooth Device	Behavior
Acknowledge label	1 beep
Label rejected	2 beeps at low frequency
Transmission error	Beep will sound high-low-high-low
Link successful	Beep will sound low-medium-high
Link unsuccessful	Beep will sound high-low-high-low

LED on Bluetooth Device	Behavior
Yellow LED blinks at 2 Hz	Linking in progress
Off	Disconnected or unlinked
Yellow LED blinks at 50 Hz	Bluetooth transmission in progress
Yellow LED blinks at the same rate as the paging beep (1 Hz)	Paging
Green LED blinks once a second	Disabled indication

Upon startup, if the Bluetooth device sounds a long tone, this means the Bluetooth device has not passed its automatic Selftest and has entered isolation mode. If the Bluetooth device is reset, the sequence is repeated. Contact Technical Assistance (page 6-1) for assistance.

Bluetooth Printer Setup

The Bluetooth managed device should be as close as possible, in direct line of sight, with the Thor VM3 during the pairing process.

1. Open the Bluetooth EZPair Panel.
2. Tap Discover. Locate the Bluetooth printer in the Discovery panel.
3. Tap and hold the stylus (or double-tap) on the Bluetooth printer ID until the right-mouse-click menu appears.

Select Pair as Printer to pair the Thor VM3 with the Bluetooth managed printer.

The devices are paired. The Bluetooth managed printer may respond with a series of beeps or LED flashes.

Please refer to the Bluetooth managed printer manufacturer's User Guide; it may be available on the manufacturer's web site. Contact Technical Assistance (page 6-1) for Bluetooth product assistance.

Note: If there is no beep or no LED flash from the Bluetooth managed printer, the Thor VM3 and the printer are currently paired.

Easy Pairing and Auto-Reconnect

The Bluetooth module can establish relationships with new devices after the user taps the Discover button. It can auto-reconnect to devices previously known but which have gone out of range and then returned within range (up to 32.8 ft (10 meters) Line of Sight).

Note: Configuration elements are persistent and stored in the registry.

Setup the Bluetooth module to establish how the user is notified by easy pairing and auto-reconnect events.

Display

Start > Control Panel > Display (Classic View)

Start > Control Panel > Appearance and Themes (Category View)

The Thor VM3 supports a pixel display resolution.

Screen Rotation (page 2-22) Screen Blanking (page 2-21) are configured on separate control panels.

Power Options

Select a Power Scheme

Power Schemes

Start > Control Panel > Power Options > Power Schemes tab (Classic View)

Start > Control Panel > Performance and Maintenance> Power Options > Power Schemes tab **(**Category View)

View UPS Battery Status

Power Meter

Start > Control Panel > Power Options > Power Schemes tab (Classic View)

Start > Control Panel > Performance and Maintenance> Power Options > Power Schemes tab (Category View)

On the Power Meter tab, battery #1 refers to the UPS battery.

Shows power status: external power or UPS battery and the total battery power remaining before a recharge is necessary.

Configure Power Button Behavior

Start > Control Panel > Power Options > Power Schemes tab (Classic View)

Start > Control Panel > Performance and Maintenance> Power Options > Advanced tab (Category View)

Advanced

The **Advanced** panel allows setting the power button behavior when the unit is on and the power button is pressed. Options are:

- Do nothing
- Ask me what to do
- Stand by
- Shut down.

The default is to shut down. The Thor VM3 performs an orderly shut down when the power key is pressed when this option is enabled.

Hibernate

Enable Hibernation

Start > Control Panel > Power Options > Hibernate tab (Classic View)

Start > Control Panel > Performance and Maintenance> Power Options > Hibernate tab (Category View)

By default, hibernate is on the Thor VM3. The default can be changed on this page.

The disk space necessary for hibernation plus the free disk space on the hard drive are listed.

Screen Control

Start > Control Panel > Screen (Classic View)

Set screen properties for the Thor VM3.

Factory Default Settings

Screen Blanking (Blackout)	
Enable screen blanking	Enabled
Screen on delay (ms)	1000
COM Port	COM1
Current Level	
LCD Brightness (%)	100 (see note)

Note: There is no default value for Ambient Light % as it varies depending on the level of light where the Thor VM3 is located.

Screen Blanking

Screen blanking allows the Thor VM3 display to automatically be turned off whenever the vehicle is in motion.

Use the **Screen on delay** to specify the period of time in ms (milliseconds) between when the vehicle stops and the Thor VM3 screen turns on. For example, use the delay if the switch end of the cable is attached to the vehicle's accelerator pedal. Release of the accelerator may mean the truck is coasting to a stop rather than stationary. Configure the delay to allow time for the vehicle to coast to a stop. The default value is 1000 ms.

Specify the **COM Port** to which the screen blanking cable is attached. If a COM port is in use by another application, that COM port is grayed out and cannot be selected for screen blanking.

*Do not enable **Screen Blanking** until the cable is properly connected to the specified COM port.*

To disable screen blanking, uncheck the **Enable screen blanking** checkbox.

See Screen Blanking (page 1-38) for hardware requirements.

Refer to the wiring instructions, including appropriate cautions and warnings, in the Connect Power (page 1-24) section.

Screen Rotation

Start > Control Panel > Screen Rotation (Classic view)

The Screen Rotation panel provides options for rotating the display:

0 Degree - Returns screen to the default orientation.

90 Degree - Rotates the screen counter clockwise 90 degrees as compared to the default orientation.

180 Degree - Rotates the screen 180 degrees as compared to the default orientation.

270 Degree - Rotates the screen counter clockwise 270 degrees as compared to the default orientation.

Select the desired rotation and tap **OK**. The screen may briefly go blank during the rotation process.

Tap **Close** to dismiss the panel and keep the current screen rotation.

Sounds

Start > Control Panel > Sounds and Audio Devices (Classic View)

Start > Control Panel > Sounds, Speech and Audio Devices (Category View)

Use the slider bar to adjust the volume level as desired.

Alternatively:

- Tap the Volume icon, if present, in the taskbar and move the slider until the volume level is as desired.

User Accounts

Note: The following applies to a Thor VM3 that is not part of a domain. When the Thor VM3 is part of a domain, the user is prompted for credentials at Windows startup or log on.

The Thor VM3 is pre-configured with an administrator account named Administrator. By default, the Thor VM3 automatically logs onto the Administrator account at Windows startup.

If the user assigns a password to the Administrator account:

- The password is stored and used when the Thor VM3 logs onto the Administrator account at Windows startup. The user is not prompted to enter a password.
- If the user logs off, the password must be manually entered to log back onto the Thor VM3.
- At the logon prompt, the user could specify a different user account (and password, if necessary) to log on, assuming the account has been added to the Thor VM3.

- When the Thor VM3 is restarted, the Administrator account automatically becomes the active user account, regardless of the active account before the restart.

If using the Windows Certificate Store (page 6-17) the user must assign a password to the active (Administrator) account.

Sounds

By default the headset side tone is muted.

Wi-Fi

Start > Control Panel > Wi-Fi (Classic view)

Provides a shortcut to access the 802.11a/b/g/n radio configuration utility.

Tap the Wi-Fi icon to access the Summit Client Utility (page 6-1).

Bar Code Readers

The Thor VM3 can use the following external bar code readers:

- Tethered hand-held scanners are tethered to a serial port or a USB host port (via a dongle cable) on the Thor VM3 Quick Mount Smart Dock and are configured by scanning the engine-specific bar codes in the scanner manufacturer's programming guide. The manufacturer's guides are usually shipped with the bar code reader.
- Wireless hand-held Bluetooth scanners are configured by scanning the engine-specific bar codes in the scanner manufacturer's programming guide. The manufacturer's guides are usually shipped with the bar code reader.
- The body worn Bluetooth Ring Scanner module may be using a Symbol 4400 Ring Imager or a Symbol 955 Ring Scanner. The BTRS module is configured by scanning the bar codes in the Bluetooth Ring Scanner Guide.

Scanner Wedge

Honeywell provides Freefloat Link*One for bar code decoding needs on the Thor VM3. Refer to the Freefloat website for documentation on Freefloat Link*One.

Touch Screen Calibration

Start > Programs > PenMount Windows Universal Driver

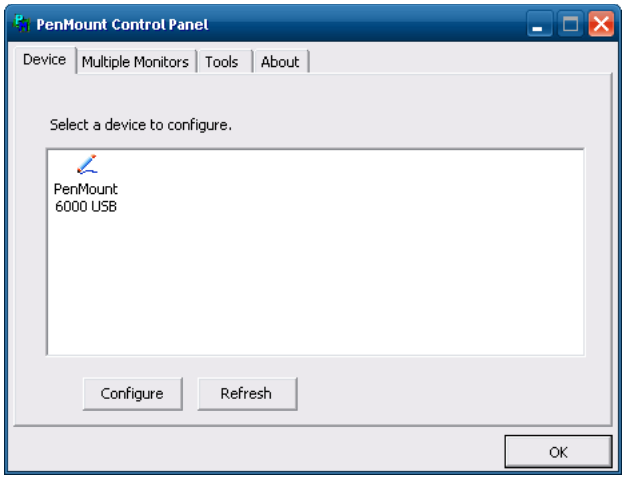

To calibrate the touch screen, tap **Start > Programs > PenMount Universal Driver > Utility > PenMount Control Panel**. Select **PenMount 6000 USB** and then tap **Configure**. Select Standard Calibration or Advance Calibration.

Advanced Calibration allows the user to select the number of calibration points. With either option, follow the on screen instructions to touch the red square, hold the touch and then lift the stylus to complete the calibration process.

BIOS

The Microsoft Windows operating system is installed before shipping. The default BIOS parameters are configured at that time. In most cases, it is unnecessary to modify the BIOS parameters.

Generally, it is only necessary to enter the BIOS setup to change the boot order of the drives.

This section is not intended to detail all features of the BIOS, instead it is intended to cover the most commonly used setup options.

***CAUTION** - Be very careful when using this utility to modify BIOS Setup parameters. The Thor VM3 may generate unexpected results when incorrect or conflicting parameter values are entered. Selecting incorrect or invalid options may require the Thor VM3 to be returned for repairs.*
The parameters should only be modified by Information Services personnel or the system administrator.

Accessing the BIOS Setup

When the Embedded BIOS screen (Phoenix Technologies) is displayed press the **Del** key to enter BIOS setup.

Use the arrow keys to move around the screen.

To access and modify the BIOS on the Thor VM3, an external keyboard must be attached.

Boot Order

To view or edit the boot order, select the **Boot** tab.

By default, the first device in the boot order is **USB Hard Drive**.

The second device is the **Windows CE Image**.

If a USB drive, such as a thumb drive is attached to the Thor VM3, the device attempts to boot from the USB drive:
- If the USB drive contains a bootable sector, the Thor VM3 boots from the USB drive.
- If the USB drive does not contain a bootable sector, the Thor VM3 does not boot. Remove the USB drive and boot the Thor VM3 again.

Exiting BIOS Setup

To exit the BIOS setup, select the **Exit** tab and select one of these options:

- Save Setting and Restart
- Exit Setup without Saving Changes
- Reload Factory-Defaults and Restart

Thor VM3 Recovery DVD

A recovery DVD is available to restore the operating system on your Thor VM3 to the same state it had when it was shipped from the factory. The recovery DVD may not reload all factory installed software.

Contact Technical Assistance (page 6-1) for information on the recovery DVD and for assistance installing other factory loaded software.

•

Windows Embedded Standard 2009

1. Locate the CCU icon either on the desktop or by selecting
2. Double-tap the icon to launch the CCU.

Windows Embedded Standard 7 and Windows 7 Professional:

3.
4.

Using Configuration Cloning Utility GUI

3 Wireless Network Connections

Network Connections Control Panel

For best results, do not use the Network Connections panel (**Start > Control Panel > Network Connections**) to disable the Summit wireless adapter. Due to a limitation of the system architecture, if the Summit wireless adapter is disabled in the Network Connections panel, it cannot be re-enabled from this control panel. Instead, the Thor VM3 must be rebooted to enable the Summit wireless adapter.

The Device Manager (**Control Panel > System > Hardware > Device Manager**) can be used to disable and enable the Summit wireless adapter without rebooting the Thor VM3.

Summit Wireless Network Configuration

The Summit client device is a Summit 802.11a/b/g/n radio, capable of 802.11a, 802.11b, 802.11g and 802.11n data rates. The radio can be configured for no encryption, WEP encryption or WPA security.

Security Options Supported are

Important Notes

It is important that all dates are correct on the Thor VM3 and host computers when using any type of certificate. Certificates are date sensitive and if the date is not correct authentication will fail.

It may be necessary to upgrade radio software in order to use certain Summit Client Utility (SCU) features. Contact Technical Assistance (page 6-1) *for details.*

When using the 802.11a radio, the U-NII 1 band is the preferred band for indoor operation. For regulatory domains in which the U-NII 3 band is allowed, the following channels are supported: 149, 153, 157 and 161. The AP must be configured accordingly.

After making any changes to the wireless configuration, restart the Thor VM3.

Summit Client Utility

Note: When making changes to profile or global parameters, the device should be restarted afterwards.

Start > All Programs > Summit > Summit Client Utility *or*

SCU Icon on Desktop *or*

Summit Tray Icon (if present) *or*

Wi-FI Icon in the Windows Control Panel (if present)

The **Main** tab provides information, admin login and active profile selection.

Profile specific parameters are found on the **Profile** tab. The parameters on this tab can be set to unique values for each profile.

The **Status** tab contains information on the current connection.

The **Diags** tab provides utilities to troubleshoot the radio.

Global parameters are found on the **Global** tab. The values for these parameters apply to all profiles.

Summit Tray Icon

The Summit tray icon is not shown when the Thor VM3 is running Windows Embedded Standard 2009.

The Windows Wireless icon (located in the taskbar) may not display a successful wireless connection. The SCU Main tab should be used to verify the success of the connection instead.

Wireless Zero Config Utility

- The WZC utility has an icon in the toolbar indicating the Wireless Zero Config application is enabled but the connection is inactive at this time (the device is not connected to a network). The WZC icon may not be visible until control is passed to the WZC utility as described below.
- You can use either the Wireless Zero Configuration Utility or the Summit Client Utility to connect to your network. The Summit Client Utility is recommended because the Wireless Zero Configuration Utility cannot control the complete set of security features of the radio.

To Switch Control to the Wireless Zero Config Utility

1. Select **ThirdPartyConfig** in the Active Profile drop down box on the **Main** tab.
2. A message appears that a Power Cycle is required to make settings activate properly.
3. Tap **OK**.
4. Restart the Thor VM3.

The Summit Client Utility passes control to Wireless Zero Config and the WZC Wireless Information control panel. Using the options in the Wireless Zero Config panels, set up radio and security settings. There may be a slight delay before the Wireless Zero Config icon indicates the status of the connection.

To Switch Control to SCU

1. To switch back to SCU control, select any other profile except **ThirdPartyConfig** in the SCU Active Config drop down list on the **Main** tab.
2. A message appears that a Power Cycle is required to make settings activate properly.
3. Tap **OK**.
4. Restart the Thor VM3.

Radio control is passed to the SCU.