FCC C2PC Test Report

FCC ID	:	**HDC-17600074**
Equipment	:	**WiFi 7 10G Router**
Model No.	:	**SDG-8733, SDG-8734, SDG-8733v, SDG-8734v** **(Please refer to section 1.1.1 for more details)**
Brand Name	:	**Adtran**
Applicant	:	**Adtran**
Address	:	**901 Explorer Boulevard, Huntsville, Alabama, United States, 35806-2807**
Standard	:	**47 CFR FCC Part 15.407**
Equipment Class / Type	:	☒ **6ID: Indoor access point** ☐ **6PP: Subordinate device** ☐ **6XD: Client device**
Received Date	:	**May 30, 2024**
Tested Date	:	**Jun. 03 ~ Jun. 11, 2024**

We, International Certification Corporation, would like to declare that the tested sample has been evaluated and in compliance with the requirement of the above standards. The test results contained in this report refer exclusively to the product. It shall not be reproduced except in full without the written approval of our laboratory.

Reviewed by:	**Approved by:**
Along Chen / Assistant Manager	**Gary Chang / Manager**

Table of Contents

1 GENERAL DESCRIPTION 5

1.1 Information 5
1.2 Local Support Equipment List 9
1.3 Test Setup Chart 10
1.4 The Equipment List 14
1.5 Test Standards 15
1.6 Reference Guidance 15
1.7 Deviation from Test Standard and Measurement Procedure 15
1.8 Measurement Uncertainty 16

2 TEST CONFIGURATION 17

2.1 Testing Facility 17
2.2 Test Worst Modes and Channel Details 17

3 TRANSMITTER TEST RESULTS 19

3.1 Unwanted Emissions 19
3.2 AC Power Line Conducted Emissions 22

4 TEST LABORATORY INFORMATION 23

Appendix A. Unwanted Emissions

Appendix B. AC Power Line Conducted Emissions

Release Record

Report No.	Version	Description	Issued Date
FR431301-01AO	Rev. 01	Initial issue	Oct. 08, 2024

Summary of Test Results

FCC Rules	Test Items	Measured	Result
15.207	AC Power Line Conducted Emissions	[dBuV]: 0.393MHz 44.21 (Margin -3.78dB) - AV	Pass
15.407(b)(5) 15.209	Unwanted Emission	[dBuV/m at 3m]: 7290.00MHz 53.10 (Margin -0.90dB) - AV	Pass

Declaration of Conformity:
The test results with all measurement uncertainty excluded are presented in accordance with the regulation limits or requirements declared by manufacturers.
Comments and Explanations:
The declared of product specification for EUT presented in the report are provided by the manufacturer, and the manufacturer takes all the responsibilities for the accuracy of product specification.

1 General Description

1.1 Information

This report is prepared for FCC class II change.
This report is issued as a supplementary report to the original project no. FR431301AO. The difference is concerned with following items:

- ✧ Adding two models for configurations with VoIP function
- ✧ Version of I/O board is changed from V02 to V03.

Conducted emission and radiated emission tests had been re-tested and only its data was presented in the following sections.

1.1.1 Product Details (Adding models were marked in boldface.)

The following models are provided to this EUT.

Brand Name	Model Name	Product Name	Description
Adtran	SDG-8733	WiFi 7 10G Router	W/O VOIP, With 10G RJ45 WAN Port
	SDG-8734	WiFi 7 10G Router	W/O VOIP, With 10G SFP WAN Port
	SDG-8733v	**WiFi 7 10G Router**	**W/ VOIP, With 10G RJ45 WAN Port**
	SDG-8734v	**WiFi 7 10G Router**	**W/ VOIP, With 10G SFP WAN Port**

1.1.2 Specification of the Equipment under Test (EUT)

RF General Information					
Frequency Range (MHz)	**IEEE Std. 802.11**	**Ch. Freq. (MHz)**	**Channel Number**	**Transmit Chains (N_{TX})**	**Data Rate / MCS**
5925 ~ 7125	11a	5955 ~ 7115	1 ~ 233 [59]	4	6-54 Mbps
5925 ~ 7125	ax (HE20)	5955 ~ 7115	1 ~ 233 [59]	4	MCS 0-11
5925 ~ 7125	ax (HE40)	5965 ~ 7085	3 ~ 227 [29]	4	MCS 0-11
5925 ~ 7125	ax (HE80)	5985 ~ 7025	7 ~ 215 [14]	4	MCS 0-11
5925 ~ 7125	ax (HE160)	6025 ~ 6985	15 ~ 207 [7]	4	MCS 0-11
5925 ~ 7125	be (EHT20)	5955 ~ 7115	1 ~ 233 [59]	4	MCS 0-13
5925 ~ 7125	be (EHT40)	5965 ~ 7085	3 ~ 227 [29]	4	MCS 0-13
5925 ~ 7125	be (EHT80)	5985 ~ 7025	7 ~ 215 [14]	4	MCS 0-13
5925 ~ 7125	be (EHT160)	6025 ~ 6985	15 ~ 207 [7]	4	MCS 0-13
5925 ~ 7125	be (EHT320)	6105 ~ 6905	31 ~ 191 [6]	4	MCS 0-13
Note 1: OFDM/OFDMA-BPSK, QPSK, 16QAM, 64QAM, 256QAM, 1024QAM and 4096QAM modulation.					

1.1.3 Antenna Details

Ant. No.	Model	Type	Connector	Operating Frequencies (MHz) / Gain (dBi)			
				5925~6425	6425~6525	6525~6875	6875~7125
1	6G1	Dipole	UFL	3.633	3.27	5.028	3.521
2	6G2	Dipole	UFL	5.509	4.485	4.791	4.287
3	6G3	Dipole	UFL	2.745	2.99	2.441	2.648
4	6G4	Dipole	UFL	4.363	3.851	3.334	3.701
5	6G5	Dipole	UFL	5.989	4.635	4.055	4.055

1.1.4 Configuration of Equipment under Test (EUT)

Power Supply Type	15Vdc from adapter	
Beamforming	☒ Support	☐ Not support
RU Configuration	☒ Full RU	☐ Partial RU
Channel Puncturing	☐ Support	☒ Not support

1.1.5 Accessories

Accessories		
No.	**Equipment**	**Description**
1	AC adapter	Brand: LUCENT TRANS Model: 1A78 I/P: 100-240Vac, 50/60Hz, 1.2A O/P: 15V⎓ 3.0A, 45.0W Power Line: USB 1.8m non-shielded without core
2	AC adapter	Brand: PHIHONG Model: AA45A-59FKD I/P: 100-240Vac, 50/60Hz, 1.2A O/P: 15V⎓3.0A, 45.0W Power Line: USB 1.8m non-shielded without core
3	RJ45	2m non-shielded without core

1.1.6 Channel List

11a / ax HE20 / be EHT20							
Channel	**Frequency (MHz)**	**Channel**	**Frequency (MHz)**	**Channel**	**Frequency (MHz)**	**Channel**	**Frequency (MHz)**
1	5955	61	6255	121	6555	181	6855
5	5975	65	6275	125	6575	185	6875
9	5995	69	6295	129	6595	189	6895
13	6015	73	6315	133	6615	193	6915
17	6035	77	6335	137	6635	197	6935
21	6055	81	6355	141	6655	201	6955
25	6075	85	6375	145	6675	205	6975
29	6095	89	6395	149	6695	209	6995
33	6115	93	6415	153	6715	213	7015
37	6135	97	6435	157	6735	217	7035
41	6155	101	6455	161	6755	221	7055
45	6175	105	6475	165	6775	225	7075
49	6195	109	6495	169	6795	229	7095
53	6215	113	6515	173	6815	233	7115
57	6235	117	6535	177	6835	-	-

ax HE40 / be EHT40							
Channel	**Frequency (MHz)**	**Channel**	**Frequency (MHz)**	**Channel**	**Frequency (MHz)**	**Channel**	**Frequency (MHz)**
3	5965	67	6285	131	6605	195	6925
11	6005	75	6325	139	6645	203	6965
19	6045	83	6365	147	6685	211	7005
27	6085	91	6405	155	6725	219	7045
35	6125	99	6445	163	6765	227	7085
43	6165	107	6485	171	6805	---	---
51	6205	115	6525	179	6845	---	---
59	6245	123	6565	187	6885	---	---

ax HE80 / be EHT80							
Channel	**Frequency (MHz)**	**Channel**	**Frequency (MHz)**	**Channel**	**Frequency (MHz)**	**Channel**	**Frequency (MHz)**
7	5985	71	6305	135	6625	199	6945
23	6065	87	6385	151	6705	215	7025
39	6145	103	6465	167	6785	---	---
55	6225	119	6545	183	6865	---	---

ax HE160 / be EHT160							
Channel	**Frequency (MHz)**	**Channel**	**Frequency (MHz)**	**Channel**	**Frequency (MHz)**	**Channel**	**Frequency (MHz)**
15	6025	79	6345	143	6665	207	6985
47	6185	111	6505	175	6825	---	---

be EHT320							
Channel	**Frequency (MHz)**	**Channel**	**Frequency (MHz)**	**Channel**	**Frequency (MHz)**	**---**	**---**
31	6105	95	6425	159	6745	---	---
63	6265	127	6585	191	6905	---	---

1.2 Local Support Equipment List

Support Equipment List					
No.	**Equipment**	**Brand**	**Model**	**FCC ID**	**Remarks**
Non-beamforming mode - RJ45 WAN					
1	Laptop	DELL	Latitude 5400	DoC	---
2	Laptop	DELL	Latitude 5400	DoC	---
3	USB Flash	Transcend(USB 3.0)	JetFlash 700	---	---
4	RJ45 Connector	ICC	---	---	---
5	RJ45 Load	ICC	---	---	---
6	Laptop	DELL	Latitude 3440	DoC	Beamforming mode
7	WiFi 7 10G Router	Adtran	SDG-8733v	---	Beamforming mode (Provided by applicant)
8	Telephone	ISITO	IS-333	---	---
9	Telephone	ISITO	IS-333	---	---
Non-beamforming mode - SFP WAN					
1	Laptop	DELL	Latitude 5400	DoC	---
2	USB Flash	Transcend(USB 3.0)	JetFlash 700	---	---
3	RJ45 Connector	ICC	---	---	---
4	RJ45 Load	ICC	---	---	---
5	Fiber module	MikroTik	S+RJ10	---	Provided by applicant
6	Laptop	DELL	Latitude 3440	DoC	Beamforming mode
7	WiFi 7 10G Router	Adtran	SDG-8733	---	Beamforming mode (Provided by applicant)
8	Telephone	ISITO	IS-333	---	---
9	Telephone	ISITO	IS-333	---	---

1.3 Test Setup Chart

Non-beamforming mode

Test Setup Diagram (RJ45 WAN)

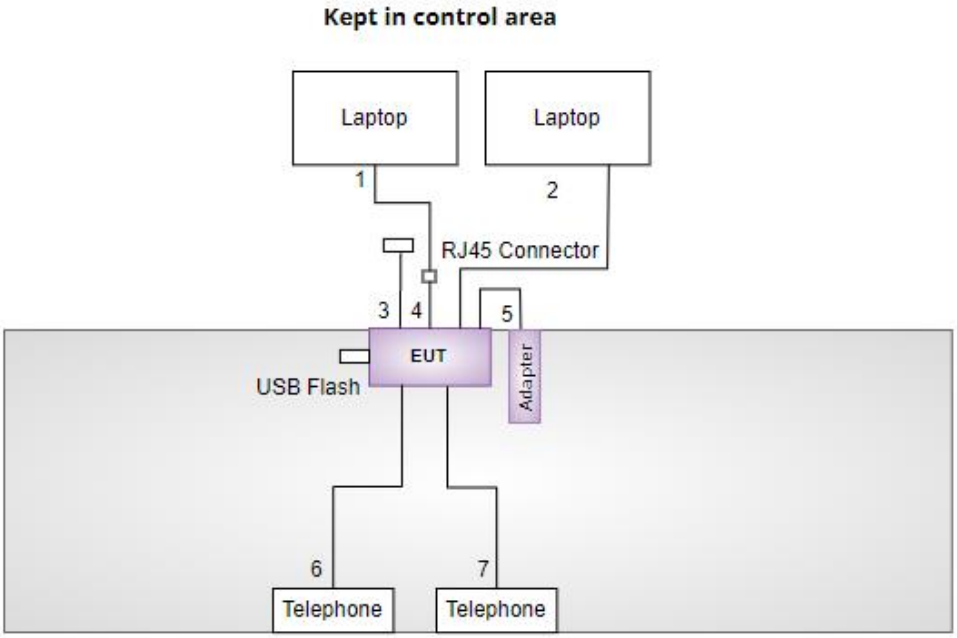

No.	Signal cable / Length (m)
1-2	RJ45, 10m non-shielded.
3	RJ45, 1.3m(x3) non-shielded with load.
4	RJ45, 2m non-shielded.
5	USB, 1.8m non-shielded without core
6-7	RJ11, 1.8m non-shielded.

Test Setup Diagram (SFP WAN)

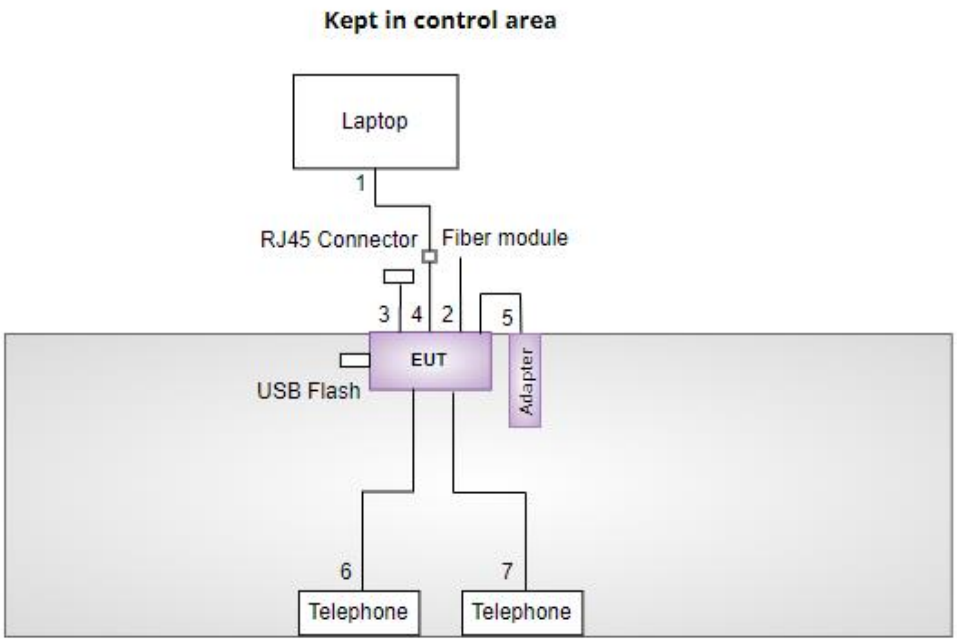

No.	Signal cable / Length (m)
1	RJ45, 10m non-shielded.
2	RJ45, 2m non-shielded.
3	RJ45, 1.3m(x3) non-shielded with load.
4	RJ45, 2m non-shielded.
5	USB, 1.8m non-shielded without core
6-7	RJ11, 1.8m non-shielded.

Beamforming mode

Test Setup Diagram (RJ45 WAN)

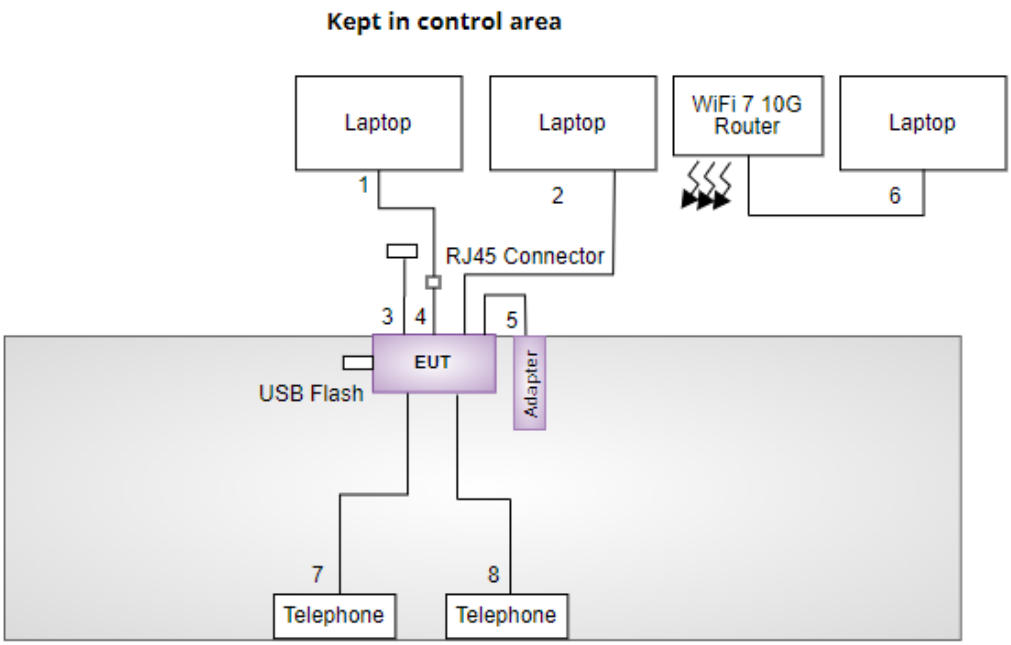

No.	Signal cable / Length (m)
1-2	RJ45, 10m non-shielded.
3	RJ45, 1.3m(x3) non-shielded with load.
4	RJ45, 2m non-shielded.
5	USB, 1.8m non-shielded without core
6	RJ45, 1.3m non-shielded.
7-8	RJ11, 1.8m non-shielded.

Test Setup Diagram (SFP WAN)

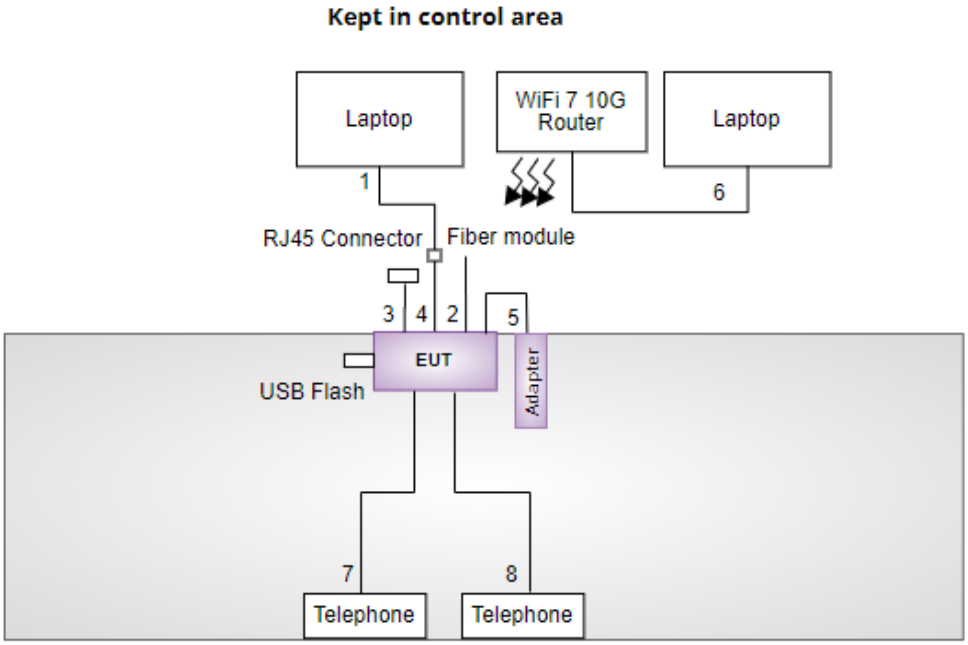

No.	Signal cable / Length (m)
1	RJ45, 10m non-shielded.
2	RJ45, 2m non-shielded.
3	RJ45, 1.3m(x3) non-shielded with load.
4	RJ45, 2m non-shielded.
5	USB, 1.8m non-shielded without core
6	RJ45, 1.3m non-shielded.
7-8	RJ11, 1.8m non-shielded.

1.4 The Equipment List

Test Item	Radiated Emission				
Test Site	966 chamber1 / (03CH01-WS)				
Tested Date	Jun. 03 ~ Jun. 11, 2024				
Instrument	**Brand**	**Model No.**	**Serial No.**	**Calibration Date**	**Calibration Until**
Receiver	R&S	ESR3	101657	Mar. 05, 2024	Mar. 04, 2025
Spectrum Analyzer	R&S	FSV40	101498	Nov. 23, 2023	Nov. 22, 2024
Loop Antenna	R&S	HFH2-Z2	100330	Oct. 31, 2023	Oct. 30, 2024
Bilog Antenna	SCHWARZBECK	VULB9168	VULB9168-522	Jul. 31, 2023	Jul. 30, 2024
Horn Antenna 1G-18G	SCHWARZBECK	BBHA 9120 D	BBHA 9120 D 1096	Nov. 27, 2023	Nov. 26, 2024
Horn Antenna 18G-40G	SCHWARZBECK	BBHA 9170	BBHA 9170517	Oct. 30, 2023	Oct. 29, 2024
Preamplifier	EMC	EMC02325	980225	Jun. 28, 2023	Jun. 27, 2024
Preamplifier	EMC	EMC118A45SE	980898	Jul. 14, 2023	Jul. 13, 2024
Preamplifier	EMC	EMC184045SE	980903	Jul. 17, 2023	Jul. 16, 2024
Loop Antenna Cable	KOAX KABEL	101354-BW	101354-BW	Oct. 03, 2023	Oct. 02, 2024
LF cable 3M	Woken	CFD400NL-LW	CFD400NL-001	Oct. 03, 2023	Oct. 02, 2024
LF cable 11M	EMC	EMCCFD400-NW-NW-11000	200801	Oct. 03, 2023	Oct. 02, 2024
LF cable 1M	EMC	EMCCFD400-NM-NM-1000	160502	Oct. 03, 2023	Oct. 02, 2024
RF Cable	EMC	EMC104-35M-35M-8000	210920	Oct. 03, 2023	Oct. 02, 2024
RF Cable	EMC	EMC104-35M-35M-3000	210922	Oct. 03, 2023	Oct. 02, 2024
Attenuator	Pasternack	PE7005-10	10-1	Oct. 05, 2023	Oct. 04, 2024
HIGHPASS FILTER 7.5-18G	STI	STI15-9722	STI-HP7.5G-A	Oct. 05, 2023	Oct. 04, 2024
Measurement Software	AUDIX	e3	6.120210g	NA	NA
Note: Calibration Interval of instruments listed above is one year.					

Test Item	Conducted Emission				
Test Site	Conduction room 1 / (CO01-WS)				
Tested Date	Jun. 11, 2024				
Instrument	**Brand**	**Model No.**	**Serial No.**	**Calibration Date**	**Calibration Until**
Receiver	R&S	ESR3	101658	Feb. 23, 2024	Feb. 22, 2025
LISN	R&S	ENV216	101579	May 09, 2024	May 08, 2025
RF Cable-CON	Woken	CFD200-NL	CFD200-NL-001	Oct. 11, 2023	Oct. 10, 2024
LISN (Support Unit)	SCHWARZBECK	Schwarzbeck 8127	8127667	Jan. 10, 2024	Jan. 09, 2025
50 ohm terminal (Support Unit)	NA	50	01	Jun. 14, 2023	Jun. 13, 2024
Measurement Software	AUDIX	e3	6.120210k	NA	NA
Note: Calibration Interval of instruments listed above is one year.					

1.5 Test Standards

47 CFR FCC Part 15.407
ANSI C63.10-2013

1.6 Reference Guidance

FCC KDB 987594 D02 U-NII 6GHz EMC Measurement v02r01
FCC KDB 789033 D02 General UNII Test Procedures New Rules v02r01
FCC KDB 412172 D01 Determining ERP and EIRP v01r01
FCC KDB 662911 D01 Multiple Transmitter Output v02r01

1.7 Deviation from Test Standard and Measurement Procedure

None

1.8 Measurement Uncertainty

The measurement uncertainties given below are based on a 95% confidence level (based on a coverage factor (k=2)).

Measurement Uncertainty	
Parameters	**Uncertainty**
Bandwidth	±34.130 Hz
Conducted power	±0.808 dB
Frequency error	$\pm 1 \times 10^{-9}$
Power density	±0.583 dB
Conducted emission	±2.715 dB
AC conducted emission	±2.92 dB
Radiated emission ≤ 1GHz	±3.41 dB
Radiated emission > 1GHz	±4.59 dB
Time	±0.1%
Temperature	±0.4 ºC

2 Test Configuration

2.1 Testing Facility

Test Laboratory	International Certification Corp.
Test Site	CO01-WS, 03CH01-WS, TH01-WS
Address of Test Site	No. 3-1, Lane 6, Wen San 3rd St., Kwei Shan District, Tao Yuan City 33381, Taiwan, R.O.C.

- FCC Designation No.: TW2732
- FCC site registration No.: 181692
- ISED#: 10807A
- CAB identifier: TW2732

2.2 Test Worst Modes and Channel Details

Test item	Modulation Mode	Test Frequency (MHz)	Data Rate	Test Configuration
Non-beamforming mode				
AC Power Line Conducted Emissions	be EHT320	6425	MCS 0	1, 2
Unwanted Emissions ≤1GHz	be EHT320	6425	MCS 0	1, 2
Unwanted Emissions >1GHz	be EHT80	6465	MCS 0	1
	be EHT160	6025	MCS 0	
	be EHT320	6745 / 6905	MCS 0	

NOTE:

1. The EUT was pretested with 3 orientations placed on the table for the radiated emission measurement – X, Y, and Z-plane. The **Z-plane** results were found as the worst case and were shown in this report.
2. Two adapters (LUCENT TRANS & PHIHONG) had been covered during the pretest and found that PHIHONG adapter was the worst case for radiated emission test and LUCENT TRANS adapter was the worst case for conducted emission test.
3. 4 configurations were assessed and found Model: SDG-8733v is worst of configurations with 10G RJ45 Wan port and Model: SDG-8734v is worst of configurations with 10G SFP Wan port.
4. The EUT had been tested by following test configurations.
   1) Configuration 1: Model: SDG-8733v
   2) Configuration 2: Model: SDG-8734v

Test item	Modulation Mode	Test Frequency (MHz)	Data Rate	Test Configuration
Beamforming mode				
AC Power Line Conducted Emissions	be EHT320	6425	MCS 0	1, 2
Unwanted Emissions ≤1GHz	be EHT320	6425	MCS 0	1, 2
Unwanted Emissions >1GHz	be EHT80	6465	MCS 0	1
	be EHT160	6025	MCS 0	
	be EHT320	6745 / 6905	MCS 0	

NOTE:

1. The EUT was pretested with 3 orientations placed on the table for the radiated emission measurement – X, Y, and Z-plane. The **Z-plane** results were found as the worst case and were shown in this report.
2. Two adapters (LUCENT TRANS & PHIHONG) had been covered during the pretest and found that PHIHONG adapter was the worst case for radiated emission test and LUCENT TRANS adapter was the worst case for conducted emission test.
3. 4 configurations were assessed and found Model: SDG-8733v is worst of configurations with 10G RJ45 Wan port and Model: SDG-8734v is worst of configurations with 10G SFP Wan port.
4. The EUT had been tested by following test configurations.

   1) Configuration 1: SDG-8733v

   2) Configuration 2: SDG-8734v

3 Transmitter Test Results

3.1 Unwanted Emissions

3.1.1 Limit of Unwanted Emissions

Restricted Band Emissions Limit			
Frequency Range (MHz)	**Field Strength (uV/m)**	**Field Strength (dBuV/m)**	**Measure Distance (m)**
0.009~0.490	2400/F(kHz)	48.5 - 13.8	300
0.490~1.705	24000/F(kHz)	33.8 - 23	30
1.705~30.0	30	29	30
30~88	100	40	3
88~216	150	43.5	3
216~960	200	46	3
Above 960	500	54	3

Note 1:
Qusai-Peak value is measured for frequency below 1GHz except for 9–90 kHz, 110–490 kHz frequency band. Peak and average value are measured for frequency above 1GHz. The limit on average radio frequency emission is as above table. The limit on peak radio frequency emissions is 20 dB above the maximum permitted average emission limit
Note 2:
Measurements may be performed at a distance other than what is specified provided. When performing measurements at a distance other than that specified, the results shall be extrapolated to the specified distance using an extrapolation factor as below, Frequency at or above 30 MHz: 20 dB/decade Frequency below 30 MHz: 40 dB/decade.

Un-restricted band emissions above 1GHz Limit		
Operating Band	**PK Limit**	**AV Limit**
5.925 – 7.125 GHz	e.i.r.p. -7 dBm [88.2 dBuV/m@3m]	e.i.r.p. -27 dBm [68.2 dBuV/m@3m]

Note 1: Measurements may be performed at a distance other than the limit distance provided they are not performed in the near field and the emissions to be measured can be detected by the measurement equipment. When performing measurements at a distance other than that specified, the results shall be extrapolated to the specified distance using an extrapolation factor of 20 dB/decade (inverse of linear distance for field-strength measurements, inverse of linear distance-squared for power-density measurements).

3.1.2 Test Procedures

1. Measurement is made at a semi-anechoic chamber that incorporates a turntable allowing a EUT rotation of 360°. A continuously-rotating, remotely-controlled turntable is installed at the test site to support the EUT and facilitate determination of the direction of maximum radiation for each EUT emission frequency. The EUT is placed at test table. For emissions testing at or below 1 GHz, the table height is 80 cm above the reference ground plane. For emission measurements above 1 GHz, the table height is 1.5 m
2. Measurement is made with the antenna positioned in both the horizontal and vertical planes of polarization. The measurement antenna is varied in height (1m ~ 4m) above the reference ground plane to obtain the maximum signal strength. Distance between EUT and antenna is 3 m.
3. This investigation is performed with the EUT rotated 360°, the antenna height scanned between 1 m and 4 m, and the antenna rotated to repeat the measurements for both the horizontal and vertical antenna polarizations.

Note:

1. 120kHz measurement bandwidth of test receiver and Quasi-peak detector is for radiated emission below 1GHz.
2. RBW=1MHz, VBW=3MHz and Peak detector is for peak measured value of radiated emission above 1GHz.
3. RBW=1MHz, VBW=1/T and Peak detector is for average measured value of radiated emission above 1GHz.

3.1.3 Test Setup

Radiated Emissions below 1 GHz

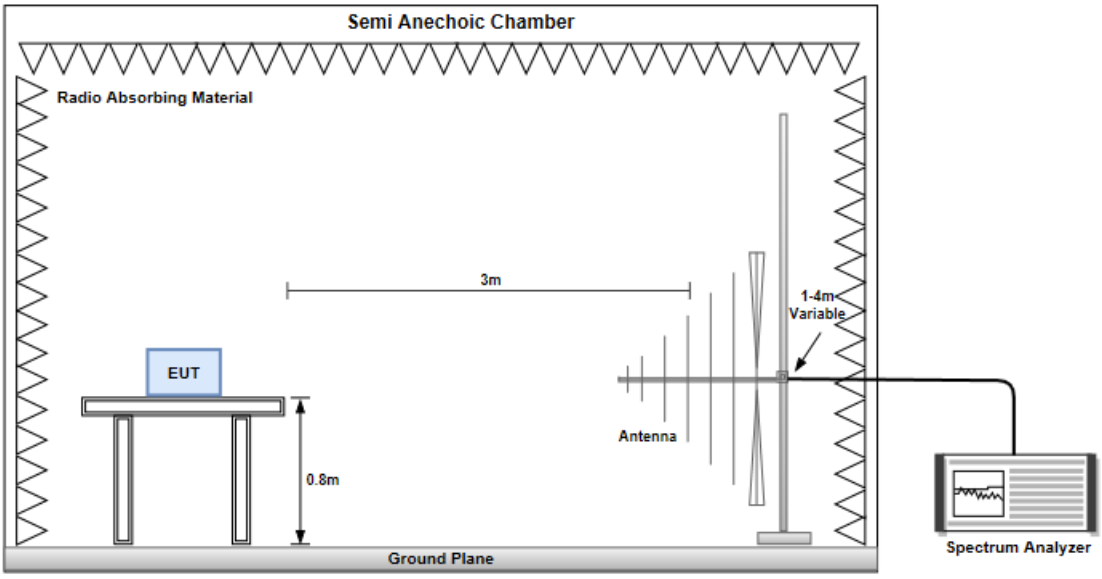

Radiated Emissions above 1 GHz

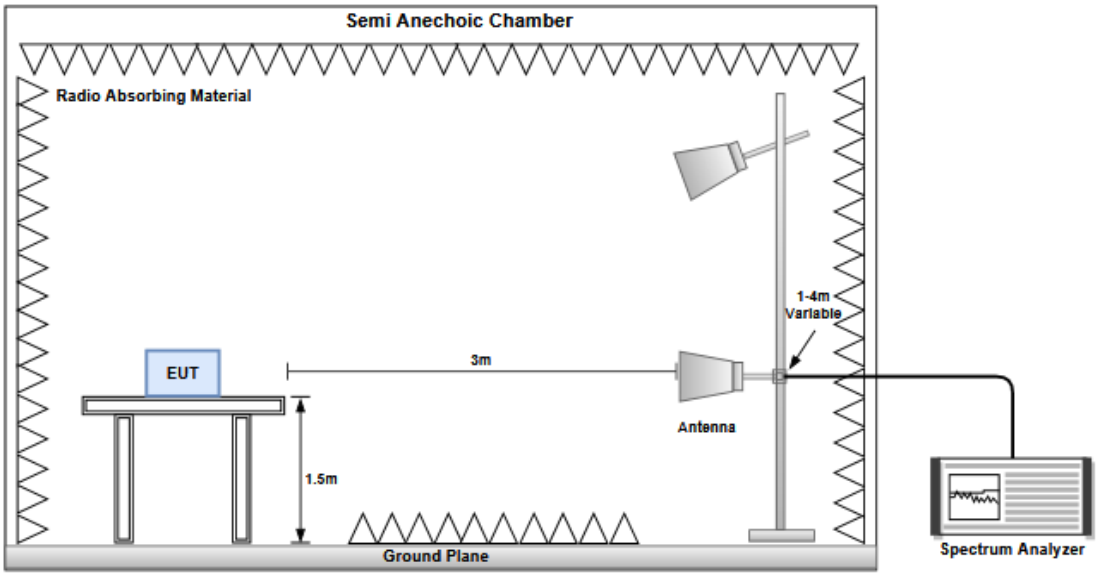

3.1.4 Test Results

Refer to Appendix A.

3.2 AC Power Line Conducted Emissions

3.2.1 Limit of AC Power Line Conducted Emissions

Conducted Emissions Limit		
Frequency Emission (MHz)	**Quasi-Peak**	**Average**
0.15-0.5	66 - 56 *	56 - 46 *
0.5-5	56	46
5-30	60	50
Note 1: * Decreases with the logarithm of the frequency.		

3.2.2 Test Procedures

1. The device is placed on a test table, raised 80 cm above the reference ground plane. The vertical conducting plane is located 40 cm to the rear of the device.
2. The device is connected to line impedance stabilization network (LISN) and other accessories are connected to other LISN. Measured levels of AC power line conducted emission are across the 50 Ω LISN port.
3. AC conducted emission measurements is made over frequency range from 150 kHz to 30 MHz.
4. This measurement was performed with AC 120V/60Hz

3.2.3 Test Setup

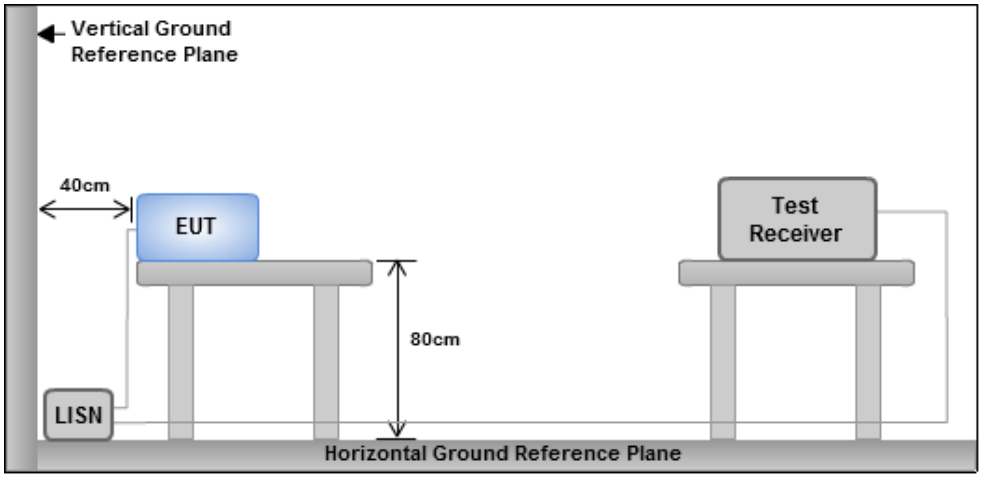

Note: 1. Support units were connected to second LISN.
2. Both of LISNs (AMN) are 80 cm from EUT and at least 80 cm from other units and other metal planes

3.2.4 Test Result

Refer to Appendix B.

4 Test laboratory information

Established in 2012, ICC provides foremost EMC & RF Testing and advisory consultation services by our skilled engineers and technicians. Our services employ a wide variety of advanced edge test equipment and one of the widest certification extents in the business.

International Certification Corporation (EMC and Wireless Communication Laboratory), it is our definitive objective is to institute long term, trust-based associations with our clients. The expectation we set up with our clients is based on outstanding service, practical expertise and devotion to a certified value structure. Our passion is to grant our clients with best EMC / RF services by oriented knowledgeable and accommodating staff.

Our Test sites are located at Linkou District and Kwei Shan District. Location map can be found on our website http://www.icertifi.com.tw.

Linkou

Tel: 886-2-2601-1640

No.30-2, Ding Fwu Tsuen, Lin Kou District, New Taipei City, Taiwan (R.O.C.)

Kwei Shan

Tel: 886-3-271-8666

No.3-1, Lane 6, Wen San 3rd St., Kwei Shan Dist., Tao Yuan City 33381, Taiwan (R.O.C.)

No.2-1, Lane 6, Wen San 3rd St., Kwei Shan Dist., Tao Yuan City 33381, Taiwan (R.O.C.)

Kwei Shan Site II

Tel: 886-3-271-8640

No.14-1, Lane 19, Wen San 3rd St., Kwei Shan Dist., Tao Yuan City 33381, Taiwan (R.O.C.)

If you have any suggestion, please feel free to contact us as below information.

Tel: 886-3-271-8666
Fax: 886-3-318-0345
Email: ICC_Service@icertifi.com.tw

══END══

Non-beamforming mode

Configuration 1: Model: SDG-8733v

Unwanted Emissions (Below 1GHz)

Modulation	be EHT320	**Test Freq. (MHz)**	6425
Polarization	Horizontal		

Test By :Allen Lee Temperature(℃):22 Humidity(%):64

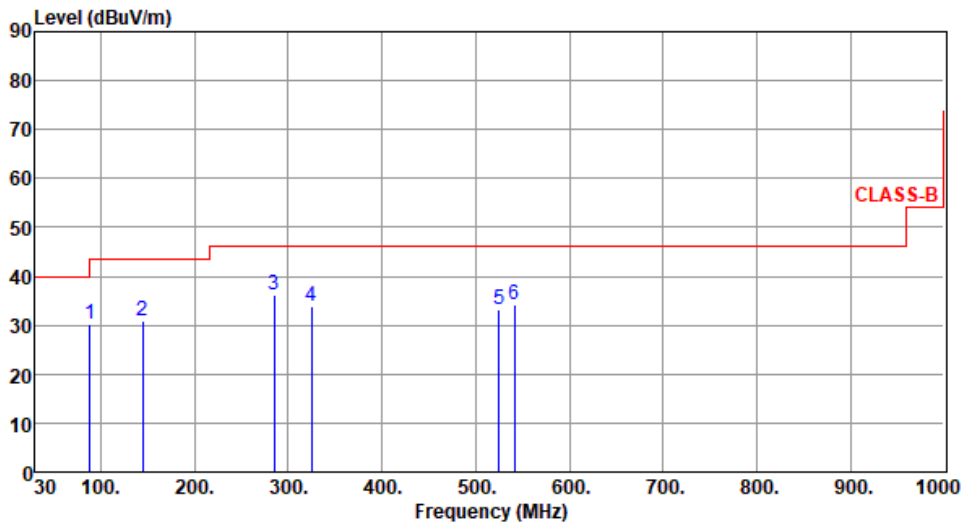

	Freq. MHz	Emission level dBuV/m	Limit dBuV/m	Margin dB	SA reading dBuV	Factor dB/m	Remark	ANT High cm	Turn Table deg
1	88.36	30.25	43.50	-13.25	44.77	-14.52	Peak	---	---
2	144.51	30.72	43.50	-12.78	39.70	-8.98	Peak	---	---
3	285.33	36.25	46.00	-9.75	44.56	-8.31	Peak	---	---
4	324.74	33.98	46.00	-12.02	41.29	-7.31	Peak	---	---
5	524.63	33.25	46.00	-12.75	35.86	-2.61	Peak	---	---
6	541.28	34.11	46.00	-11.89	36.54	-2.43	Peak	---	---

Note 1: Emission Level (dBuV/m) = SA Reading (dBuV) + Factor* (dB/m)
*Factor includes antenna factor , cable loss and amplifier gain
Note 2: Margin (dB) = Emission level (dBuV/m) – Limit (dBuV/m).
Note 3: All spurious emissions below 30MHz are more than 20 dB below the limit.

Modulation	be EHT320	**Test Freq. (MHz)**	6425
Polarization	Vertical		

Test By :Allen Lee Temperature(℃):22 Humidity(%):64

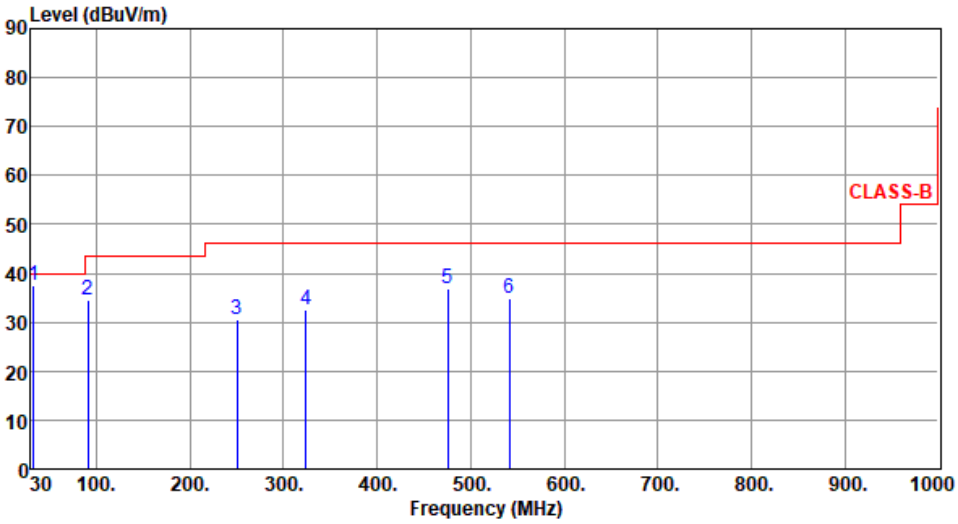

	Freq. MHz	Emission level dBuV/m	Limit dBuV/m	Margin dB	SA reading dBuV	Factor dB/m	Remark	ANT High cm	Turn Table deg
1	33.26	37.53	40.00	-2.47	47.32	-9.79	QP	100	251
2	91.28	34.45	43.50	-9.05	48.85	-14.40	Peak	---	---
3	250.74	30.68	46.00	-15.32	40.62	-9.94	Peak	---	---
4	324.16	32.45	46.00	-13.55	39.77	-7.32	Peak	---	---
5	475.44	36.88	46.00	-9.12	40.45	-3.57	Peak	---	---
6	541.23	34.74	46.00	-11.26	37.18	-2.44	Peak	---	---

Note 1: Emission Level (dBuV/m) = SA Reading (dBuV) + Factor* (dB/m)
*Factor includes antenna factor , cable loss and amplifier gain
Note 2: Margin (dB) = Emission level (dBuV/m) – Limit (dBuV/m).
Note 3: All spurious emissions below 30MHz are more than 20 dB below the limit.

Unwanted Emissions (Above 1GHz) for be EHT80

Modulation	be EHT80	**Test Freq. (MHz)**	6465
Polarization	Horizontal		

Test By :Sean Yu Temperature(℃):24 Humidity(%):64

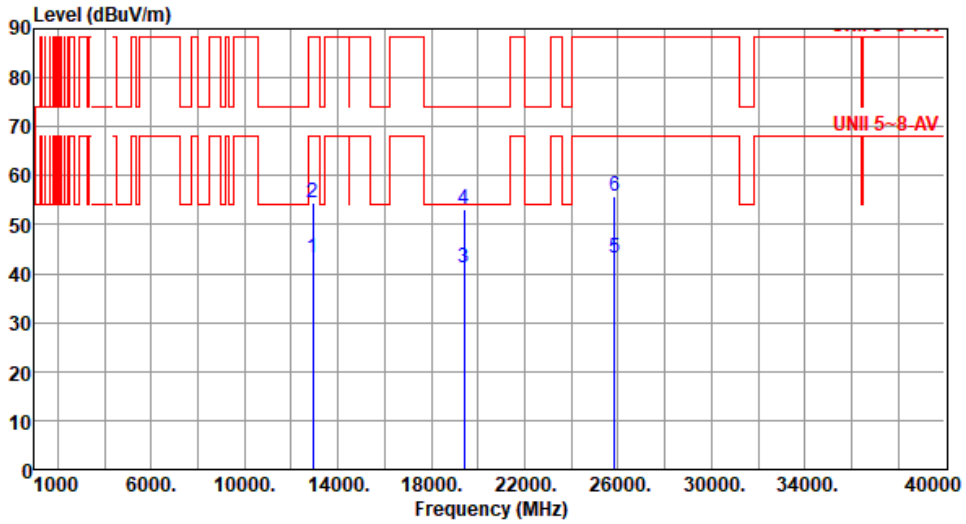

	Freq. MHz	Emission level dBuV/m	Limit dBuV/m	Margin dB	SA reading dBuV	Factor dB/m	Remark	ANT High cm	Turn Table deg
1	12930.00	43.16	68.20	-25.04	37.12	6.04	Average	100	264
2	12930.00	54.56	88.20	-33.64	48.52	6.04	Peak	100	264
3	19395.00	41.23	54.00	-12.77	39.48	1.75	Average	100	214
4	19395.00	53.15	74.00	-20.85	51.40	1.75	Peak	100	214
5	25860.00	43.26	68.20	-24.94	35.26	8.00	Average	100	203
6	25860.00	55.66	88.20	-32.54	47.66	8.00	Peak	100	203

Note 1: Emission Level (dBuV/m) = SA Reading (dBuV) + Factor* (dB/m)
*Factor includes antenna factor , cable loss and amplifier gain
Note 2: Margin (dB) = Emission level (dBuV/m) – Limit (dBuV/m).

Modulation	be EHT80	**Test Freq. (MHz)**	6465
Polarization	Vertical		

Test By :Sean Yu Temperature(℃):24 Humidity(%):64

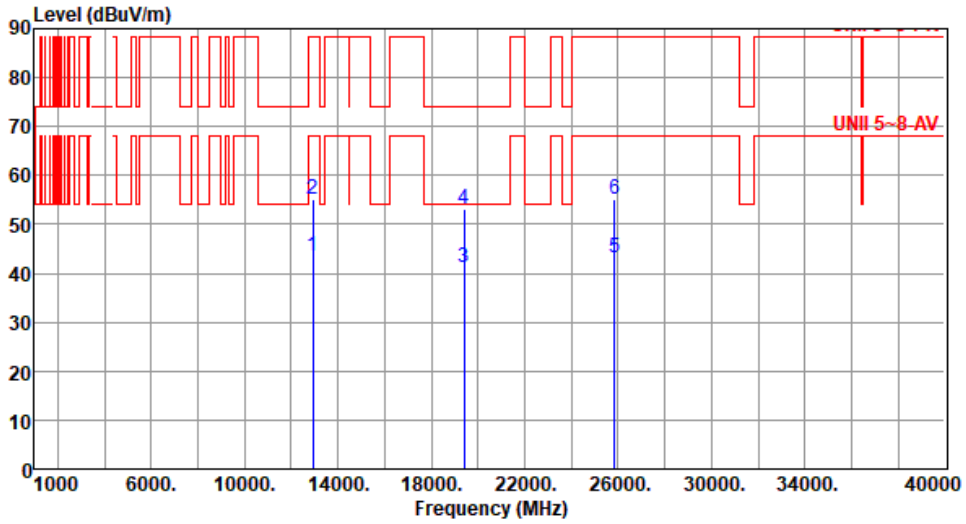

	Freq. MHz	Emission level dBuV/m	Limit dBuV/m	Margin dB	SA reading dBuV	Factor dB/m	Remark	ANT High cm	Turn Table deg
1	12930.00	43.65	68.20	-24.55	37.61	6.04	Average	100	248
2	12930.00	55.18	88.20	-33.02	49.14	6.04	Peak	100	248
3	19395.00	41.23	54.00	-12.77	39.48	1.75	Average	100	227
4	19395.00	53.01	74.00	-20.99	51.26	1.75	Peak	100	227
5	25860.00	43.26	68.20	-24.94	35.26	8.00	Average	100	147
6	25860.00	55.17	88.20	-33.03	47.17	8.00	Peak	100	147

Note 1: Emission Level (dBuV/m) = SA Reading (dBuV) + Factor* (dB/m)
*Factor includes antenna factor , cable loss and amplifier gain
Note 2: Margin (dB) = Emission level (dBuV/m) – Limit (dBuV/m).

Unwanted Emissions (Above 1GHz) for be EHT160

Modulation	be EHT160	**Test Freq. (MHz)**	6025
Polarization	Horizontal		

Test By :Sean Yu Temperature(℃):24 Humidity(%):64

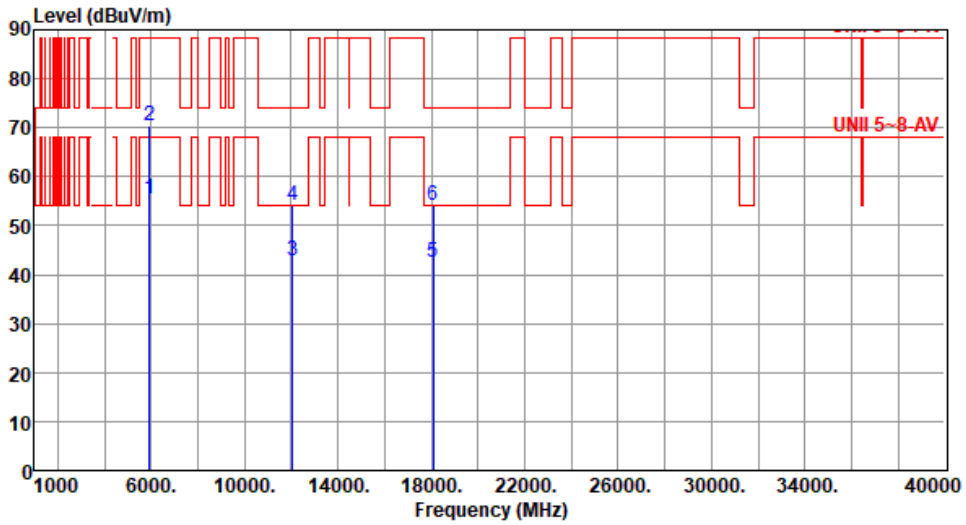

	Freq. MHz	Emission level dBuV/m	Limit dBuV/m	Margin dB	SA reading dBuV	Factor dB/m	Remark	ANT High cm	Turn Table deg
1	5925.00	55.35	68.20	-12.85	54.22	1.13	Average	153	1
2	5925.00	70.47	88.20	-17.73	69.34	1.13	Peak	153	1
3	12050.00	42.72	54.00	-11.28	36.47	6.25	Average	100	251
4	12050.00	54.15	74.00	-19.85	47.90	6.25	Peak	100	251
5	18075.00	42.47	54.00	-11.53	40.90	1.57	Average	100	247
6	18075.00	54.01	74.00	-19.99	52.44	1.57	Peak	100	247

Note 1: Emission Level (dBuV/m) = SA Reading (dBuV) + Factor* (dB/m)
*Factor includes antenna factor , cable loss and amplifier gain
Note 2: Margin (dB) = Emission level (dBuV/m) – Limit (dBuV/m).

Modulation	be EHT160	**Test Freq. (MHz)**	6025
Polarization	Vertical		

Test By :Sean Yu Temperature(℃):24 Humidity(%):64

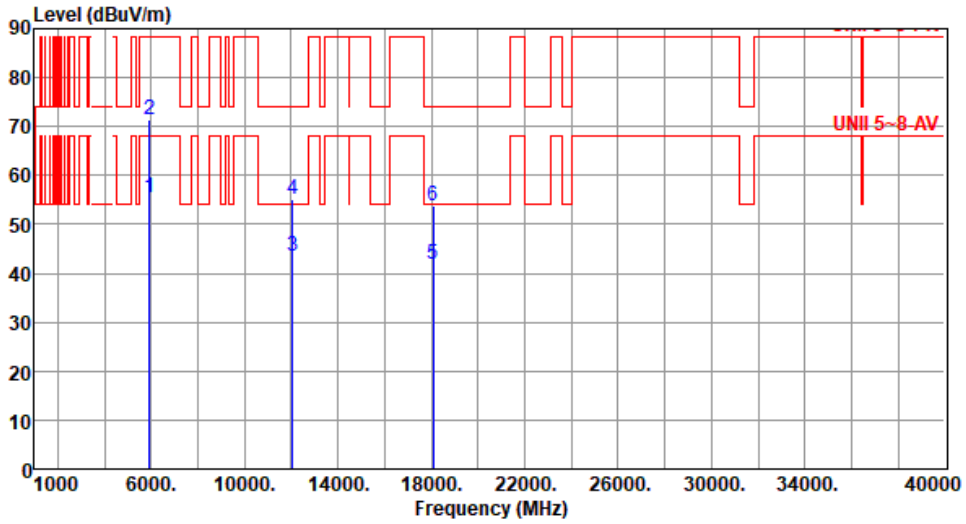

	Freq. MHz	Emission level dBuV/m	Limit dBuV/m	Margin dB	SA reading dBuV	Factor dB/m	Remark	ANT High cm	Turn Table deg
1	5925.00	55.33	68.20	-12.87	54.20	1.13	Average	153	251
2	5925.00	71.53	88.20	-16.67	70.40	1.13	Peak	153	251
3	12050.00	43.47	54.00	-10.53	37.22	6.25	Average	100	136
4	12050.00	55.16	74.00	-18.84	48.91	6.25	Peak	100	136
5	18075.00	41.70	54.00	-12.30	40.13	1.57	Average	100	188
6	18075.00	53.94	74.00	-20.06	52.37	1.57	Peak	100	188

Note 1: Emission Level (dBuV/m) = SA Reading (dBuV) + Factor* (dB/m)
*Factor includes antenna factor , cable loss and amplifier gain
Note 2: Margin (dB) = Emission level (dBuV/m) – Limit (dBuV/m).

Unwanted Emissions (Above 1GHz) for be EHT320

Modulation	be EHT320	**Test Freq. (MHz)**	6745
Polarization	Horizontal		

Test By :Sean Yu Temperature(℃):24 Humidity(%):64

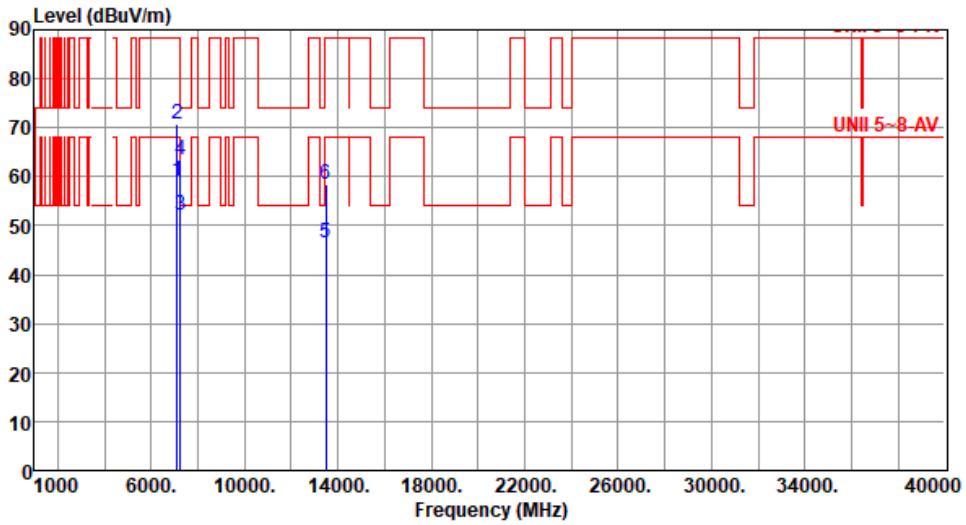

	Freq. MHz	Emission level dBuV/m	Limit dBuV/m	Margin dB	SA reading dBuV	Factor dB/m	Remark	ANT High cm	Turn Table deg
1	7125.00	59.03	68.20	-9.17	54.17	4.86	Average	174	324
2	7125.00	70.76	88.20	-17.44	65.90	4.86	Peak	174	324
3	7250.00	52.19	54.00	-1.81	46.98	5.21	Average	174	324
4	7250.00	63.58	74.00	-10.42	58.37	5.21	Peak	174	324
5	13490.00	46.60	68.20	-21.60	40.56	6.04	Average	100	248
6	13490.00	58.37	88.20	-29.83	52.33	6.04	Peak	100	248

Note 1: Emission Level (dBuV/m) = SA Reading (dBuV) + Factor* (dB/m)
*Factor includes antenna factor , cable loss and amplifier gain
Note 2: Margin (dB) = Emission level (dBuV/m) – Limit (dBuV/m).

Modulation	be EHT320	**Test Freq. (MHz)**	6745
Polarization	Vertical		

Test By :Sean Yu Temperature(℃):24 Humidity(%):64

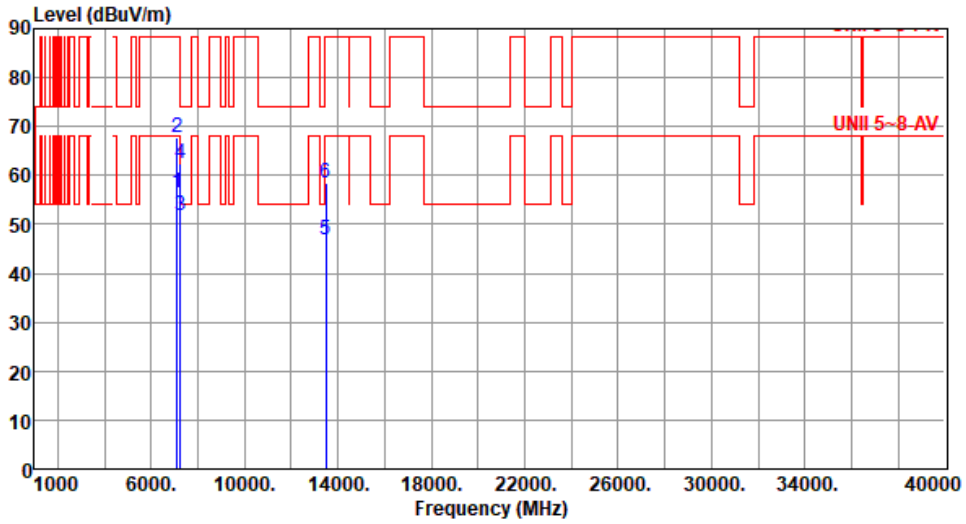

	Freq. MHz	Emission level dBuV/m	Limit dBuV/m	Margin dB	SA reading dBuV	Factor dB/m	Remark	ANT High cm	Turn Table deg
1	7125.00	56.41	68.20	-11.79	51.55	4.86	Average	179	2
2	7125.00	67.59	88.20	-20.61	62.73	4.86	Peak	179	2
3	7250.00	51.76	54.00	-2.24	46.55	5.21	Average	179	2
4	7250.00	62.55	74.00	-11.45	57.34	5.21	Peak	179	2
5	13490.00	46.72	68.20	-21.48	40.68	6.04	Average	100	280
6	13490.00	58.50	88.20	-29.70	52.46	6.04	Peak	100	280

Note 1: Emission Level (dBuV/m) = SA Reading (dBuV) + Factor* (dB/m)
*Factor includes antenna factor , cable loss and amplifier gain
Note 2: Margin (dB) = Emission level (dBuV/m) – Limit (dBuV/m).

Modulation	be EHT320	**Test Freq. (MHz)**	6905
Polarization	Horizontal		

Test By :Sean Yu Temperature(℃):24 Humidity(%):64

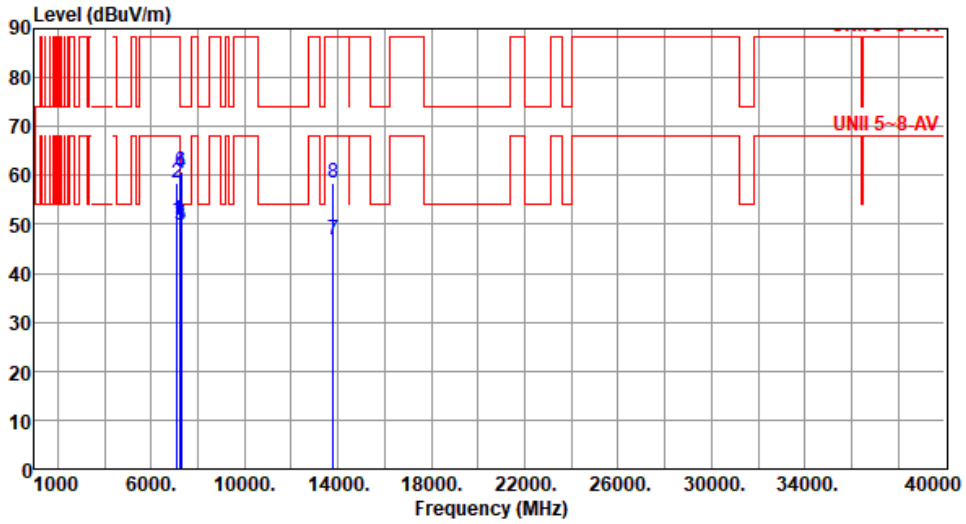

	Freq. MHz	Emission level dBuV/m	Limit dBuV/m	Margin dB	SA reading dBuV	Factor dB/m	Remark	ANT High cm	Turn Table deg
1	7125.00	50.68	68.20	-17.52	45.82	4.86	Average	160	323
2	7125.00	58.51	88.20	-29.69	53.65	4.86	Peak	160	323
3	7250.00	49.81	54.00	-4.19	44.60	5.21	Average	160	323
4	7250.00	60.31	74.00	-13.69	55.10	5.21	Peak	160	323
5	7297.00	49.70	54.00	-4.30	44.51	5.19	Average	160	323
6	7297.00	60.62	74.00	-13.38	55.43	5.19	Peak	160	323
7	13810.00	46.89	68.20	-21.31	40.66	6.23	Average	100	247
8	13810.00	58.61	88.20	-29.59	52.38	6.23	Peak	100	247

Note 1: Emission Level (dBuV/m) = SA Reading (dBuV) + Factor* (dB/m)
*Factor includes antenna factor , cable loss and amplifier gain
Note 2: Margin (dB) = Emission level (dBuV/m) – Limit (dBuV/m).

Modulation	be EHT320	**Test Freq. (MHz)**	6905
Polarization	Vertical		

Test By :Sean Yu Temperature(℃):24 Humidity(%):64

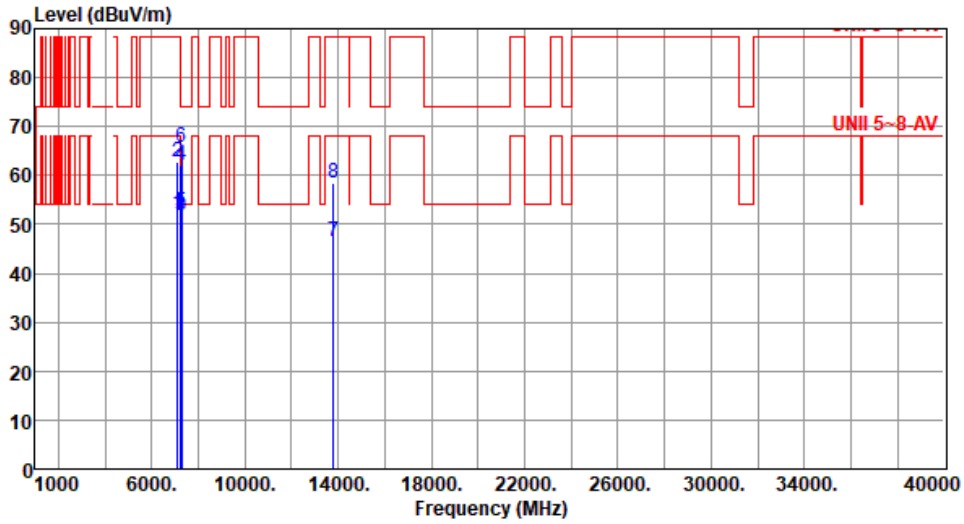

	Freq. MHz	Emission level dBuV/m	Limit dBuV/m	Margin dB	SA reading dBuV	Factor dB/m	Remark	ANT High cm	Turn Table deg
1	7125.00	52.22	68.20	-15.98	47.36	4.86	Average	194	1
2	7125.00	62.68	88.20	-25.52	57.82	4.86	Peak	194	1
3	7250.00	51.67	54.00	-2.33	46.46	5.21	Average	194	1
4	7250.00	62.24	74.00	-11.76	57.03	5.21	Peak	194	1
5	7297.00	52.60	54.00	-1.40	47.41	5.19	Average	194	1
6	7297.00	65.71	74.00	-8.29	60.52	5.19	Peak	194	1
7	13810.00	46.56	68.20	-21.64	40.33	6.23	Average	100	125
8	13810.00	58.61	88.20	-29.59	52.38	6.23	Peak	100	125

Note 1: Emission Level (dBuV/m) = SA Reading (dBuV) + Factor* (dB/m)
*Factor includes antenna factor , cable loss and amplifier gain
Note 2: Margin (dB) = Emission level (dBuV/m) – Limit (dBuV/m).

Configuration 2: Model: SDG-8734v
Unwanted Emissions (Below 1GHz)

Modulation	be EHT320	**Test Freq. (MHz)**	6425
Polarization	Horizontal		

Test By :Allen Lee Temperature(℃):22 Humidity(%):64

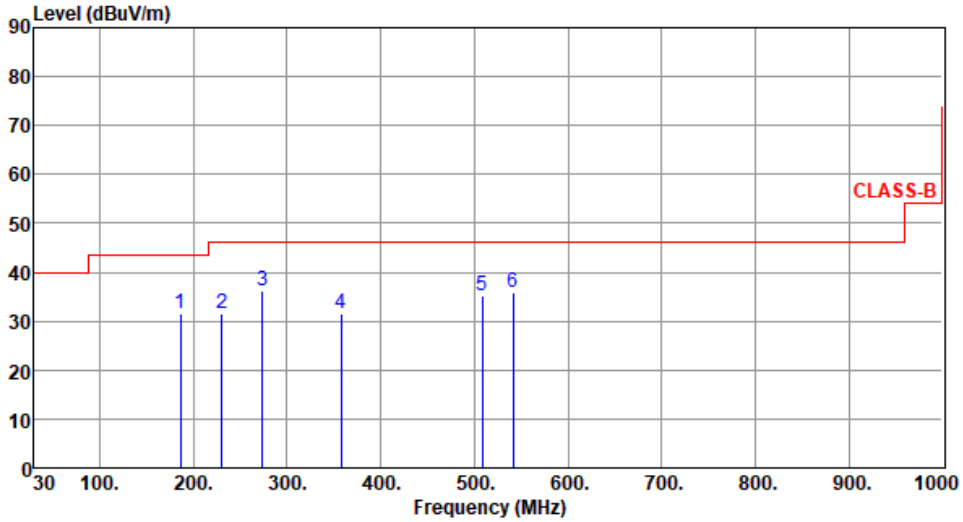

	Freq. MHz	Emission level dBuV/m	Limit dBuV/m	Margin dB	SA reading dBuV	Factor dB/m	Remark	ANT High cm	Turn Table deg
1	186.56	31.54	43.50	-11.96	42.48	-10.94	Peak	---	---
2	230.36	31.45	46.00	-14.55	42.91	-11.46	Peak	---	---
3	273.58	36.06	46.00	-9.94	44.92	-8.86	Peak	---	---
4	357.93	31.64	46.00	-14.36	38.38	-6.74	Peak	---	---
5	508.47	35.28	46.00	-10.72	38.06	-2.78	Peak	---	---
6	541.46	35.85	46.00	-10.15	38.28	-2.43	Peak	---	---

Note 1: Emission Level (dBuV/m) = SA Reading (dBuV) + Factor* (dB/m)
*Factor includes antenna factor , cable loss and amplifier gain
Note 2: Margin (dB) = Emission level (dBuV/m) – Limit (dBuV/m).
Note 3: All spurious emissions below 30MHz are more than 20 dB below the limit.

Modulation	be EHT320	**Test Freq. (MHz)**	6425
Polarization	Vertical		

Test By :Allen Lee Temperature(℃):22 Humidity(%):64

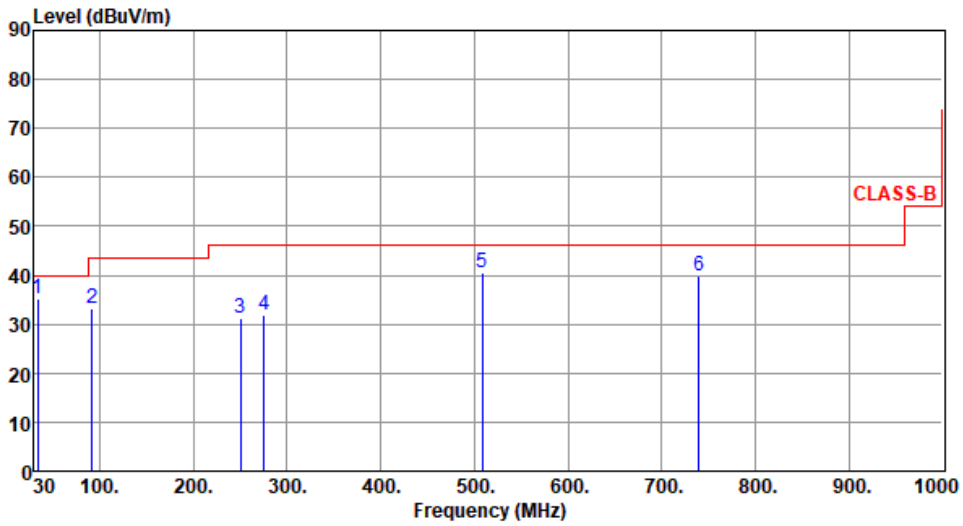

	Freq. MHz	Emission level dBuV/m	Limit dBuV/m	Margin dB	SA reading dBuV	Factor dB/m	Remark	ANT High cm	Turn Table deg
1	33.67	35.24	40.00	-4.76	44.90	-9.66	QP	100	178
2	91.47	33.26	43.50	-10.24	47.64	-14.38	Peak	---	---
3	250.75	31.24	46.00	-14.76	41.18	-9.94	Peak	---	---
4	275.23	31.96	46.00	-14.04	40.71	-8.75	Peak	---	---
5	508.48	40.42	46.00	-5.58	43.20	-2.78	Peak	---	---
6	739.68	39.75	46.00	-6.25	37.90	1.85	Peak	---	---

Note 1: Emission Level (dBuV/m) = SA Reading (dBuV) + Factor* (dB/m)
*Factor includes antenna factor , cable loss and amplifier gain
Note 2: Margin (dB) = Emission level (dBuV/m) – Limit (dBuV/m).
Note 3: All spurious emissions below 30MHz are more than 20 dB below the limit.

Beamforming mode

Configuration 1: Model: SDG-8733v

Unwanted Emissions (Below 1GHz)

Modulation	be EHT320	**Test Freq. (MHz)**	6425
Polarization	Horizontal		

Test By :Allen Lee Temperature(℃):22 Humidity(%):64

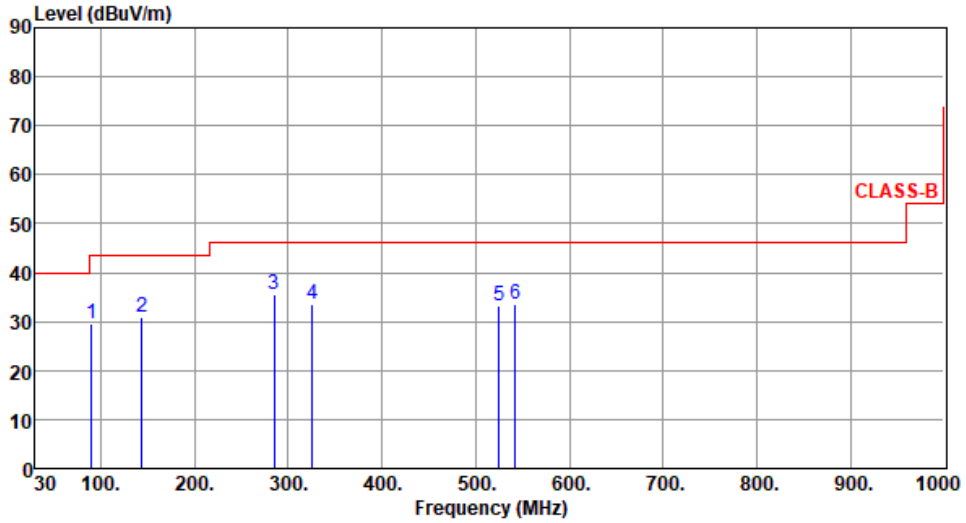

	Freq. MHz	Emission level dBuV/m	Limit dBuV/m	Margin dB	SA reading dBuV	Factor dB/m	Remark	ANT High cm	Turn Table deg
1	90.42	29.68	43.50	-13.82	44.10	-14.42	Peak	---	---
2	143.69	30.87	43.50	-12.63	39.86	-8.99	Peak	---	---
3	285.16	35.47	46.00	-10.53	43.78	-8.31	Peak	---	---
4	325.31	33.49	46.00	-12.51	40.77	-7.28	Peak	---	---
5	524.64	33.18	46.00	-12.82	35.79	-2.61	Peak	---	---
6	542.46	33.49	46.00	-12.51	35.90	-2.41	Peak	---	---

Note 1: Emission Level (dBuV/m) = SA Reading (dBuV) + Factor* (dB/m)
*Factor includes antenna factor , cable loss and amplifier gain
Note 2: Margin (dB) = Emission level (dBuV/m) – Limit (dBuV/m).
Note 3: All spurious emissions below 30MHz are more than 20 dB below the limit.

Modulation	be EHT320	**Test Freq. (MHz)**	6425
Polarization	Vertical		

Test By :Allen Lee Temperature(℃):22 Humidity(%):64

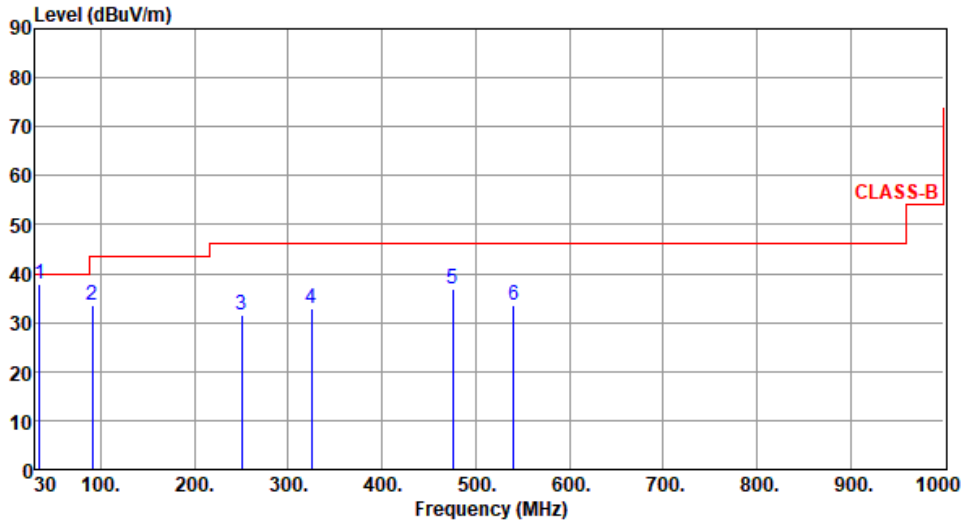

	Freq. MHz	Emission level dBuV/m	Limit dBuV/m	Margin dB	SA reading dBuV	Factor dB/m	Remark	ANT High cm	Turn Table deg
1	34.35	37.85	40.00	-2.15	47.38	-9.53	QP	100	255
2	90.75	33.42	43.50	-10.08	47.84	-14.42	Peak	---	---
3	250.27	31.69	46.00	-14.31	41.63	-9.94	Peak	---	---
4	324.47	32.84	46.00	-13.16	40.15	-7.31	Peak	---	---
5	475.69	36.89	46.00	-9.11	40.46	-3.57	Peak	---	---
6	540.89	33.58	46.00	-12.42	36.02	-2.44	Peak	---	---

Note 1: Emission Level (dBuV/m) = SA Reading (dBuV) + Factor* (dB/m)
*Factor includes antenna factor , cable loss and amplifier gain
Note 2: Margin (dB) = Emission level (dBuV/m) – Limit (dBuV/m).
Note 3: All spurious emissions below 30MHz are more than 20 dB below the limit.

Unwanted Emissions (Above 1GHz) for be EHT80

Modulation	be EHT80	**Test Freq. (MHz)**	6465
Polarization	Horizontal		

Test By :Sean Yu Temperature(℃):25 Humidity(%):62

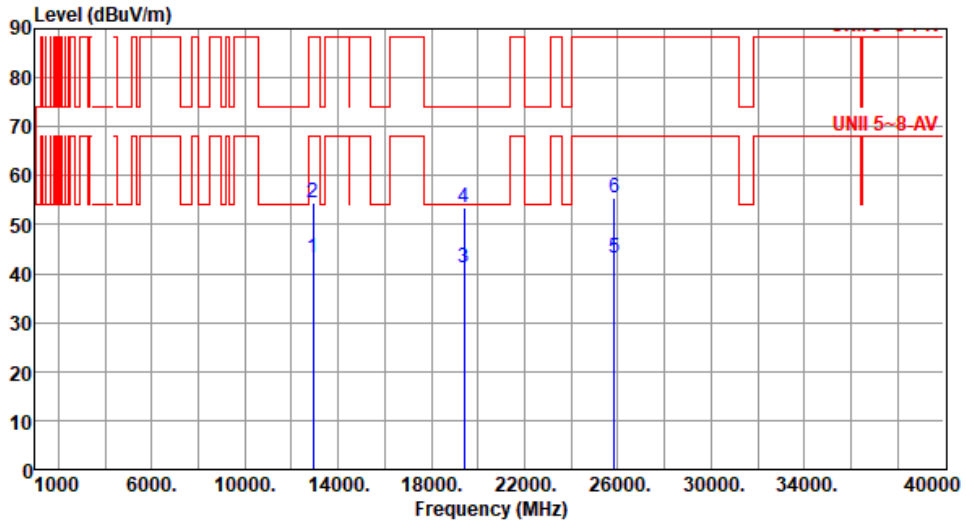

	Freq. MHz	Emission level dBuV/m	Limit dBuV/m	Margin dB	SA reading dBuV	Factor dB/m	Remark	ANT High cm	Turn Table deg
1	12930.00	43.29	68.20	-24.91	37.25	6.04	Average	100	266
2	12930.00	54.52	88.20	-33.68	48.48	6.04	Peak	100	266
3	19395.00	41.26	54.00	-12.74	39.51	1.75	Average	100	214
4	19395.00	53.31	74.00	-20.69	51.56	1.75	Peak	100	214
5	25860.00	43.16	68.20	-25.04	35.16	8.00	Average	100	227
6	25860.00	55.59	88.20	-32.61	47.59	8.00	Peak	100	227

Note 1: Emission Level (dBuV/m) = SA Reading (dBuV) + Factor* (dB/m)
*Factor includes antenna factor , cable loss and amplifier gain
Note 2: Margin (dB) = Emission level (dBuV/m) – Limit (dBuV/m).

Modulation	be EHT80	**Test Freq. (MHz)**	6465
Polarization	Vertical		

Test By :Sean Yu Temperature(℃):25 Humidity(%):62

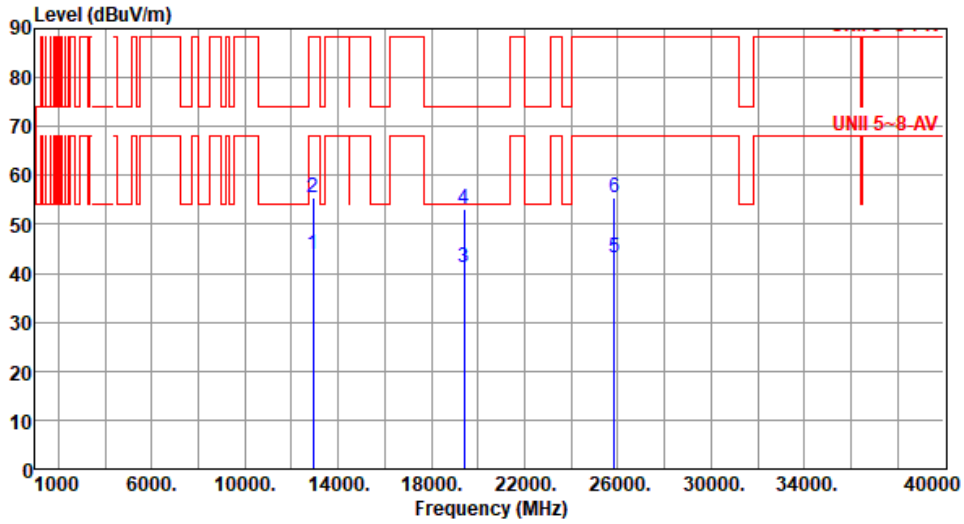

	Freq. MHz	Emission level dBuV/m	Limit dBuV/m	Margin dB	SA reading dBuV	Factor dB/m	Remark	ANT High cm	Turn Table deg
1	12930.00	43.89	68.20	-24.31	37.85	6.04	Average	100	179
2	12930.00	55.36	88.20	-32.84	49.32	6.04	Peak	100	179
3	19395.00	41.26	54.00	-12.74	39.51	1.75	Average	100	264
4	19395.00	53.30	74.00	-20.70	51.55	1.75	Peak	100	264
5	25860.00	43.31	68.20	-24.89	35.31	8.00	Average	100	119
6	25860.00	55.59	88.20	-32.61	47.59	8.00	Peak	100	119

Note 1: Emission Level (dBuV/m) = SA Reading (dBuV) + Factor* (dB/m)
*Factor includes antenna factor , cable loss and amplifier gain
Note 2: Margin (dB) = Emission level (dBuV/m) – Limit (dBuV/m).

Unwanted Emissions (Above 1GHz) for be EHT160

Modulation	be EHT160	**Test Freq. (MHz)**	6025
Polarization	Horizontal		

Test By :Sean Yu Temperature(℃):25 Humidity(%):62

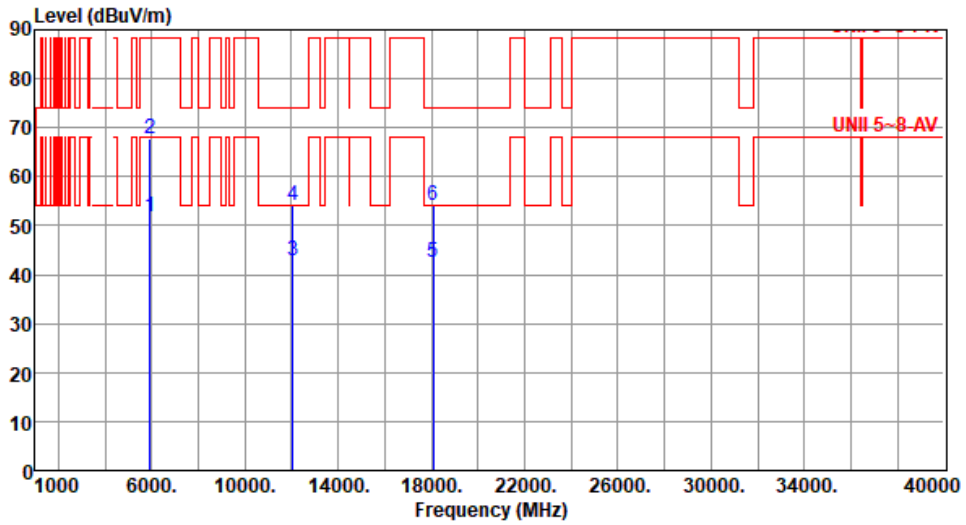

	Freq. MHz	Emission level dBuV/m	Limit dBuV/m	Margin dB	SA reading dBuV	Factor dB/m	Remark	ANT High cm	Turn Table deg
1	5925.00	51.93	68.20	-16.27	50.80	1.13	Average	158	2
2	5925.00	67.66	88.20	-20.54	66.53	1.13	Peak	158	2
3	12050.00	42.73	54.00	-11.27	36.48	6.25	Average	100	248
4	12050.00	54.11	74.00	-19.89	47.86	6.25	Peak	100	248
5	18075.00	42.43	54.00	-11.57	40.86	1.57	Average	100	251
6	18075.00	54.14	74.00	-19.86	52.57	1.57	Peak	100	251

Note 1: Emission Level (dBuV/m) = SA Reading (dBuV) + Factor* (dB/m)
*Factor includes antenna factor , cable loss and amplifier gain
Note 2: Margin (dB) = Emission level (dBuV/m) – Limit (dBuV/m).

Modulation	be EHT160	**Test Freq. (MHz)**	6025
Polarization	Vertical		

Test By :Sean Yu Temperature(℃):25 Humidity(%):62

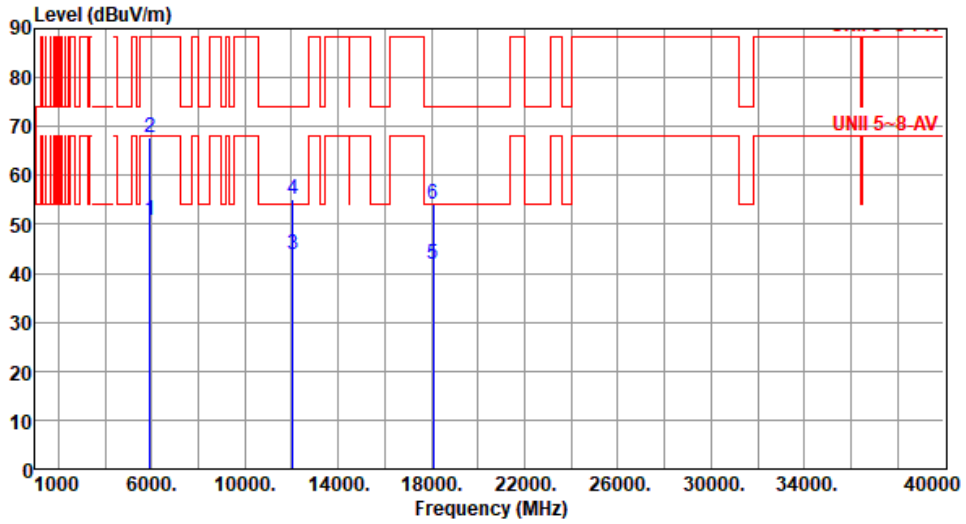

	Freq. MHz	Emission level dBuV/m	Limit dBuV/m	Margin dB	SA reading dBuV	Factor dB/m	Remark	ANT High cm	Turn Table deg
1	5925.00	50.94	68.20	-17.26	49.81	1.13	Average	151	337
2	5925.00	67.69	88.20	-20.51	66.56	1.13	Peak	151	337
3	12050.00	43.71	54.00	-10.29	37.46	6.25	Average	100	133
4	12050.00	55.12	74.00	-18.88	48.87	6.25	Peak	100	133
5	18075.00	41.79	54.00	-12.21	40.22	1.57	Average	100	231
6	18075.00	54.00	74.00	-20.00	52.43	1.57	Peak	100	231

Note 1: Emission Level (dBuV/m) = SA Reading (dBuV) + Factor* (dB/m)
*Factor includes antenna factor , cable loss and amplifier gain
Note 2: Margin (dB) = Emission level (dBuV/m) – Limit (dBuV/m).

Unwanted Emissions (Above 1GHz) for be EHT320

Modulation	be EHT320	**Test Freq. (MHz)**	6745
Polarization	Horizontal		

Test By :Sean Yu Temperature(℃):25 Humidity(%):62

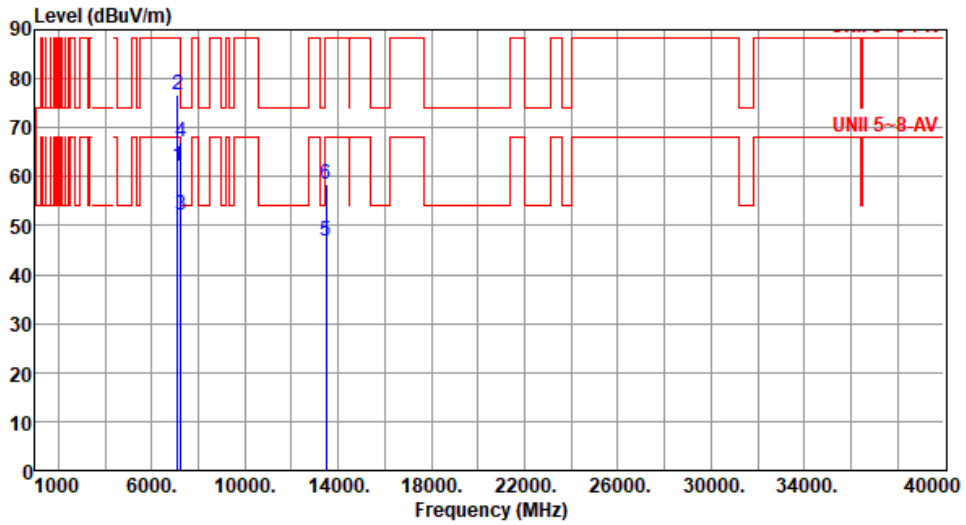

	Freq. MHz	Emission level dBuV/m	Limit dBuV/m	Margin dB	SA reading dBuV	Factor dB/m	Remark	ANT High cm	Turn Table deg
1	7125.00	62.10	68.20	-6.10	57.24	4.86	Average	157	329
2	7125.00	76.66	88.20	-11.54	71.80	4.86	Peak	157	329
3	7250.00	52.23	54.00	-1.77	47.02	5.21	Average	157	329
4	7250.00	67.24	74.00	-6.76	62.03	5.21	Peak	157	329
5	13490.00	46.90	68.20	-21.30	40.86	6.04	Average	100	177
6	13490.00	58.47	88.20	-29.73	52.43	6.04	Peak	100	177

Note 1: Emission Level (dBuV/m) = SA Reading (dBuV) + Factor* (dB/m)
*Factor includes antenna factor , cable loss and amplifier gain
Note 2: Margin (dB) = Emission level (dBuV/m) – Limit (dBuV/m).

Modulation	be EHT320	**Test Freq. (MHz)**	6745
Polarization	Vertical		

Test By :Sean Yu Temperature(℃):25 Humidity(%):62

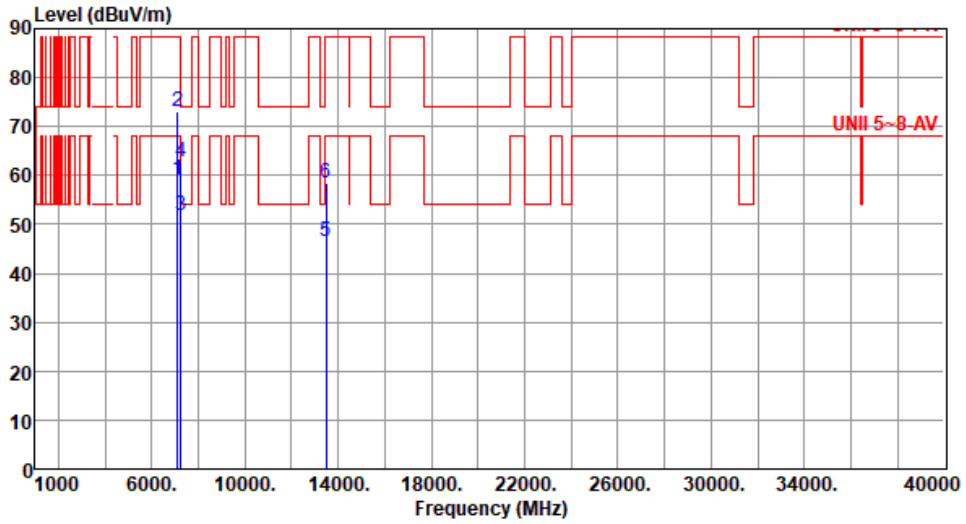

	Freq. MHz	Emission level dBuV/m	Limit dBuV/m	Margin dB	SA reading dBuV	Factor dB/m	Remark	ANT High cm	Turn Table deg
1	7125.00	59.21	68.20	-8.99	54.35	4.86	Average	181	3
2	7125.00	73.21	88.20	-14.99	68.35	4.86	Peak	181	3
3	7250.00	51.65	54.00	-2.35	46.44	5.21	Average	181	3
4	7250.00	62.67	74.00	-11.33	57.46	5.21	Peak	181	3
5	13490.00	46.62	68.20	-21.58	40.58	6.04	Average	100	281
6	13490.00	58.55	88.20	-29.65	52.51	6.04	Peak	100	281

Note 1: Emission Level (dBuV/m) = SA Reading (dBuV) + Factor* (dB/m)
*Factor includes antenna factor , cable loss and amplifier gain
Note 2: Margin (dB) = Emission level (dBuV/m) – Limit (dBuV/m).

Modulation	be EHT320	**Test Freq. (MHz)**	6905
Polarization	Horizontal		

Test By :Sean Yu Temperature(℃):25 Humidity(%):62

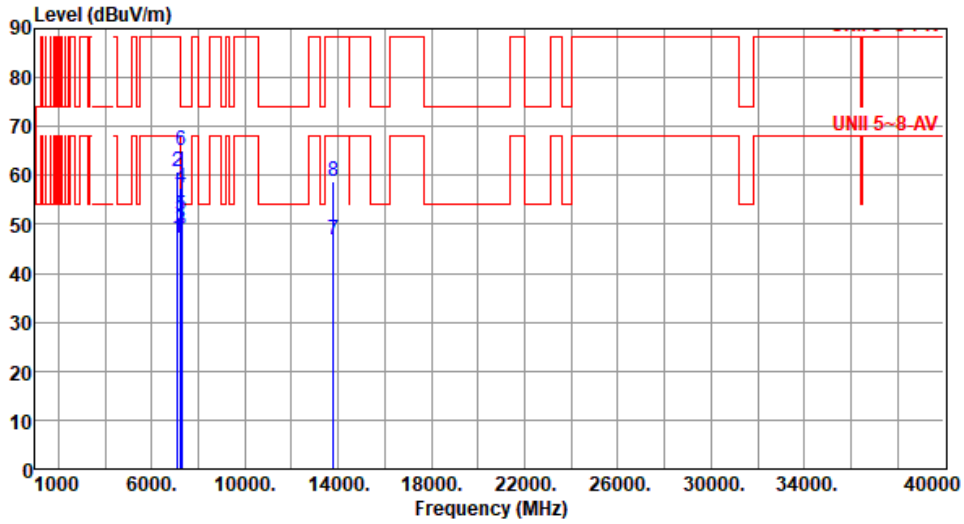

	Freq. MHz	Emission level dBuV/m	Limit dBuV/m	Margin dB	SA reading dBuV	Factor dB/m	Remark	ANT High cm	Turn Table deg
1	7125.00	47.28	68.20	-20.92	42.42	4.86	Average	154	347
2	7125.00	60.80	88.20	-27.40	55.94	4.86	Peak	154	347
3	7250.00	48.90	54.00	-5.10	43.69	5.21	Average	154	347
4	7250.00	57.48	74.00	-16.52	52.27	5.21	Peak	154	347
5	7290.00	51.93	54.00	-2.07	46.74	5.19	Average	154	347
6	7290.00	65.11	74.00	-8.89	59.92	5.19	Peak	154	347
7	13810.00	46.82	68.20	-21.38	40.59	6.23	Average	100	251
8	13810.00	58.71	88.20	-29.49	52.48	6.23	Peak	100	251

Note 1: Emission Level (dBuV/m) = SA Reading (dBuV) + Factor* (dB/m)
*Factor includes antenna factor , cable loss and amplifier gain
Note 2: Margin (dB) = Emission level (dBuV/m) – Limit (dBuV/m).

Modulation	be EHT320	**Test Freq. (MHz)**	6905
Polarization	Vertical		

Test By :Sean Yu Temperature(℃):25 Humidity(%):62

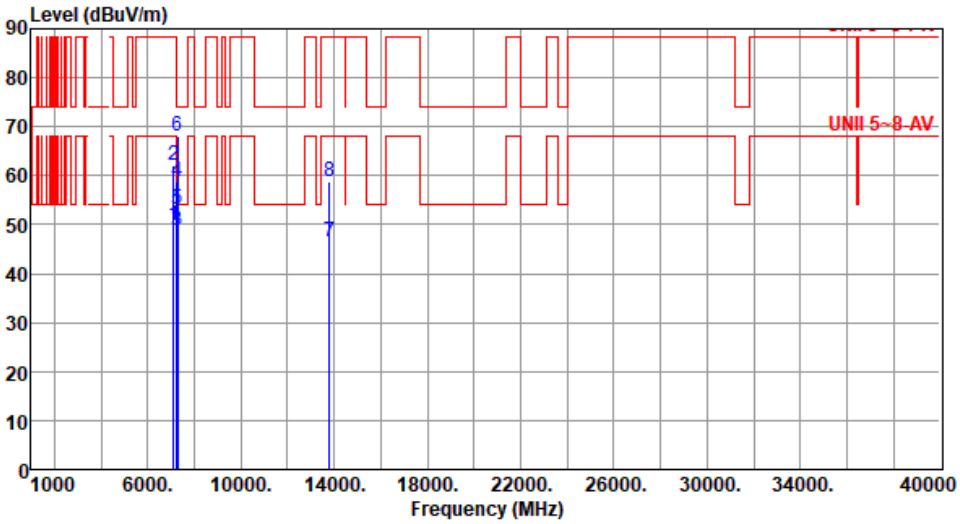

	Freq. MHz	Emission level dBuV/m	Limit dBuV/m	Margin dB	SA reading dBuV	Factor dB/m	Remark	ANT High cm	Turn Table deg
1	7125.00	49.69	68.20	-18.51	44.83	4.86	Average	173	3
2	7125.00	62.11	88.20	-26.09	57.25	4.86	Peak	173	3
3	7250.00	48.97	54.00	-5.03	43.76	5.21	Average	173	3
4	7250.00	58.90	74.00	-15.10	53.69	5.21	Peak	173	3
5	7290.00	53.10	54.00	-0.90	47.91	5.19	Average	173	3
6	7290.00	68.18	74.00	-5.82	62.99	5.19	Peak	173	3
7	13810.00	46.49	68.20	-21.71	40.26	6.23	Average	100	123
8	13810.00	58.67	88.20	-29.53	52.44	6.23	Peak	100	123

Note 1: Emission Level (dBuV/m) = SA Reading (dBuV) + Factor* (dB/m)
*Factor includes antenna factor , cable loss and amplifier gain
Note 2: Margin (dB) = Emission level (dBuV/m) – Limit (dBuV/m).

Configuration 2: Model: SDG-8734v
Unwanted Emissions (Below 1GHz)

Modulation	be EHT320	**Test Freq. (MHz)**	6425
Polarization	Horizontal		

Test By :Allen Lee Temperature(℃):22 Humidity(%):64

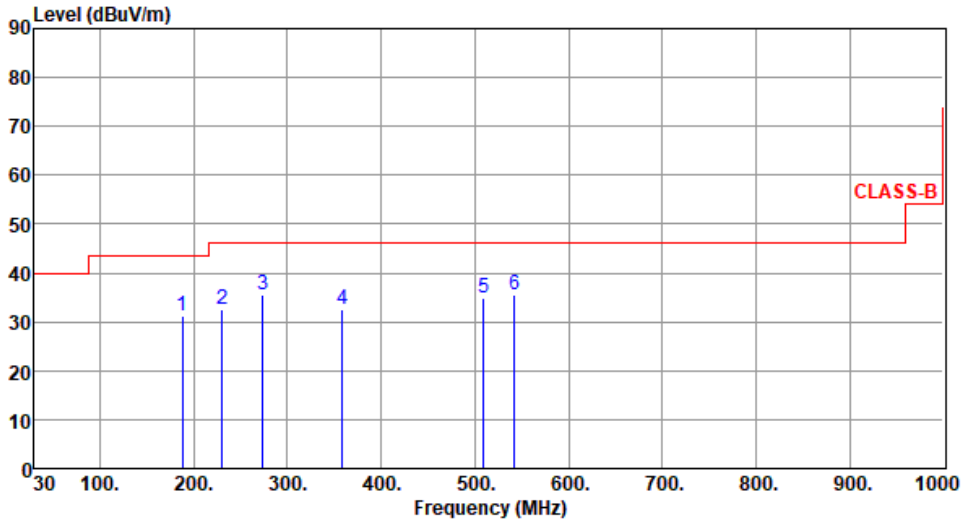

	Freq. MHz	Emission level dBuV/m	Limit dBuV/m	Margin dB	SA reading dBuV	Factor dB/m	Remark	ANT High cm	Turn Table deg
1	187.68	31.28	43.50	-12.22	42.29	-11.01	Peak	---	---
2	230.44	32.56	46.00	-13.44	44.01	-11.45	Peak	---	---
3	273.52	35.43	46.00	-10.57	44.29	-8.86	Peak	---	---
4	358.65	32.44	46.00	-13.56	39.17	-6.73	Peak	---	---
5	509.33	35.02	46.00	-10.98	37.78	-2.76	Peak	---	---
6	542.35	35.41	46.00	-10.59	37.82	-2.41	Peak	---	---

Note 1: Emission Level (dBuV/m) = SA Reading (dBuV) + Factor* (dB/m)
*Factor includes antenna factor , cable loss and amplifier gain
Note 2: Margin (dB) = Emission level (dBuV/m) – Limit (dBuV/m).
Note 3: All spurious emissions below 30MHz are more than 20 dB below the limit.

Modulation	be EHT320	**Test Freq. (MHz)**	6425
Polarization	Vertical		

Test By :Allen Lee Temperature(℃):22 Humidity(%):64

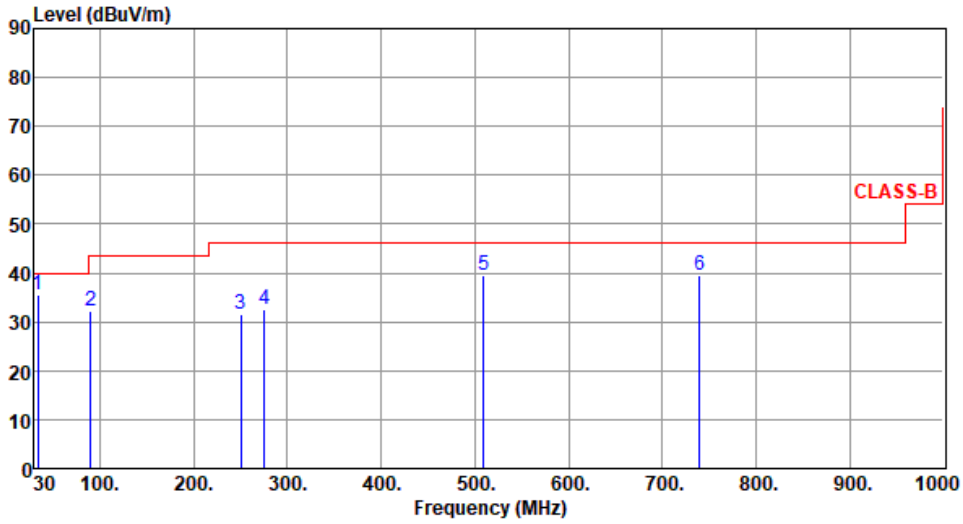

	Freq. MHz	Emission level dBuV/m	Limit dBuV/m	Margin dB	SA reading dBuV	Factor dB/m	Remark	ANT High cm	Turn Table deg
1	33.38	35.62	40.00	-4.38	45.38	-9.76	QP	100	133
2	90.45	32.29	43.50	-11.21	46.71	-14.42	Peak	---	---
3	250.62	31.58	46.00	-14.42	41.52	-9.94	Peak	---	---
4	275.59	32.44	46.00	-13.56	41.18	-8.74	Peak	---	---
5	509.31	39.52	46.00	-6.48	42.28	-2.76	Peak	---	---
6	740.21	39.36	46.00	-6.64	37.51	1.85	Peak	---	---

Note 1: Emission Level (dBuV/m) = SA Reading (dBuV) + Factor* (dB/m)
*Factor includes antenna factor , cable loss and amplifier gain
Note 2: Margin (dB) = Emission level (dBuV/m) – Limit (dBuV/m).
Note 3: All spurious emissions below 30MHz are more than 20 dB below the limit.

Non-beamforming mode

Configuration 1: Model: SDG-8733v

Modulation Mode	be EHT320	Test Freq. (MHz)	6425
Power Phase	Line		

Test by : Joe Liao Temperature: 24°C Humidity: 64%

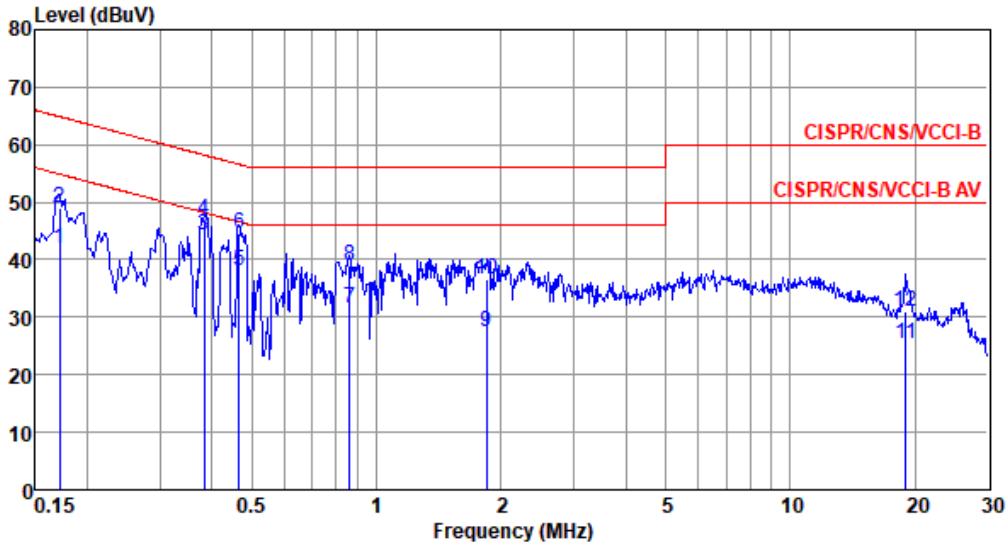

	Freq MHz	Level dBuV	Limit Line dBuV	Over Limit dB	Read Level dBuV	Factor dB	Cable loss dB	Aux dB	Remark
1	0.171	41.94	54.90	-12.96	32.00	9.65	0.07	0.22	Average
2	0.171	48.89	64.90	-16.01	38.95	9.65	0.07	0.22	QP
3*	0.383	44.20	48.21	-4.01	34.16	9.64	0.08	0.32	Average
4	0.383	47.05	58.21	-11.16	37.01	9.64	0.08	0.32	QP
5	0.466	38.05	46.58	-8.53	27.99	9.64	0.08	0.34	Average
6	0.466	44.50	56.58	-12.08	34.44	9.64	0.08	0.34	QP
7	0.862	31.58	46.00	-14.42	21.49	9.65	0.09	0.35	Average
8	0.862	38.84	56.00	-17.16	28.75	9.65	0.09	0.35	QP
9	1.848	27.53	46.00	-18.47	17.38	9.66	0.11	0.38	Average
10	1.848	36.69	56.00	-19.31	26.54	9.66	0.11	0.38	QP
11	19.021	25.36	50.00	-24.64	14.60	9.68	0.50	0.58	Average
12	19.021	30.97	60.00	-29.03	20.21	9.68	0.50	0.58	QP

Note 1: Level (dBuV) = Read Level (dBuV) + LISN Factor (dB) + Cable Loss (dB) + Aux (dB).
2: Over Limit (dB) = Level (dBuV) – Limit Line (dBuV).

Modulation Mode	be EHT320	**Test Freq. (MHz)**	6425
Power Phase	Neutral		

Test by : Joe Liao Temperature: 24°C Humidity: 64%

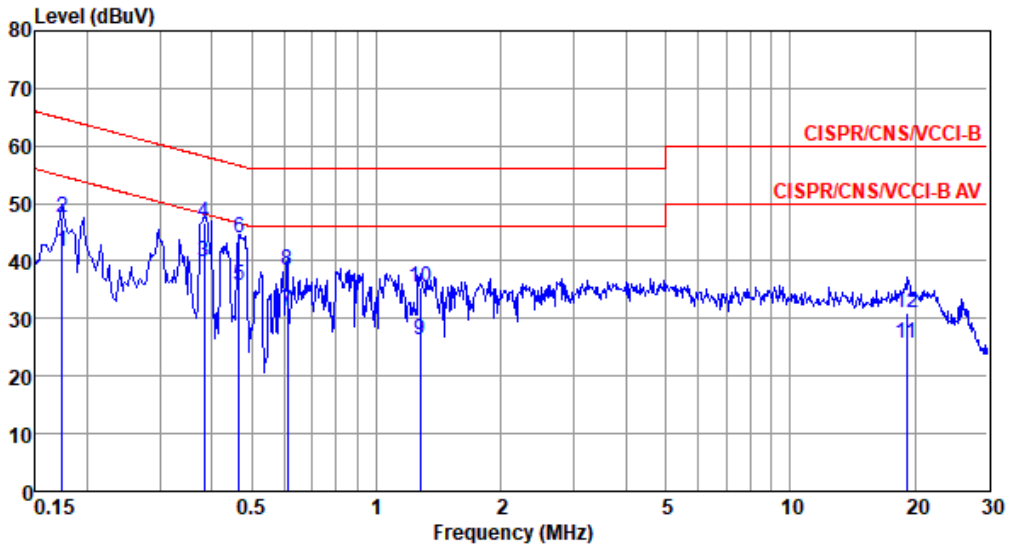

	Freq MHz	Level dBuV	Limit Line dBuV	Over Limit dB	Read Level dBuV	Factor dB	Cable loss dB	Aux dB	Remark
1	0.174	41.52	54.77	-13.25	31.65	9.65	0.07	0.15	Average
2	0.174	47.39	64.77	-17.38	37.52	9.65	0.07	0.15	QP
3*	0.383	39.91	48.21	-8.30	29.95	9.64	0.08	0.24	Average
4	0.383	46.72	58.21	-11.49	36.76	9.64	0.08	0.24	QP
5	0.466	35.82	46.58	-10.76	25.84	9.64	0.08	0.26	Average
6	0.466	43.97	56.58	-12.61	33.99	9.64	0.08	0.26	QP
7	0.611	31.25	46.00	-14.75	21.26	9.64	0.08	0.27	Average
8	0.611	38.27	56.00	-17.73	28.28	9.64	0.08	0.27	QP
9	1.276	26.13	46.00	-19.87	16.07	9.65	0.10	0.31	Average
10	1.276	35.29	56.00	-20.71	25.23	9.65	0.10	0.31	QP
11	19.122	25.82	50.00	-24.18	14.93	9.82	0.50	0.57	Average
12	19.122	30.89	60.00	-29.11	20.00	9.82	0.50	0.57	QP

Note 1: Level (dBuV) = Read Level (dBuV) + LISN Factor (dB) + Cable Loss (dB) + Aux (dB).
2: Over Limit (dB) = Level (dBuV) – Limit Line (dBuV).

Configuration 2: Model: SDG-8734v

Modulation Mode	be EHT320	**Test Freq. (MHz)**	6425
Power Phase	Line		

Test by : Joe Liao Temperature: 24°C Humidity: 64%

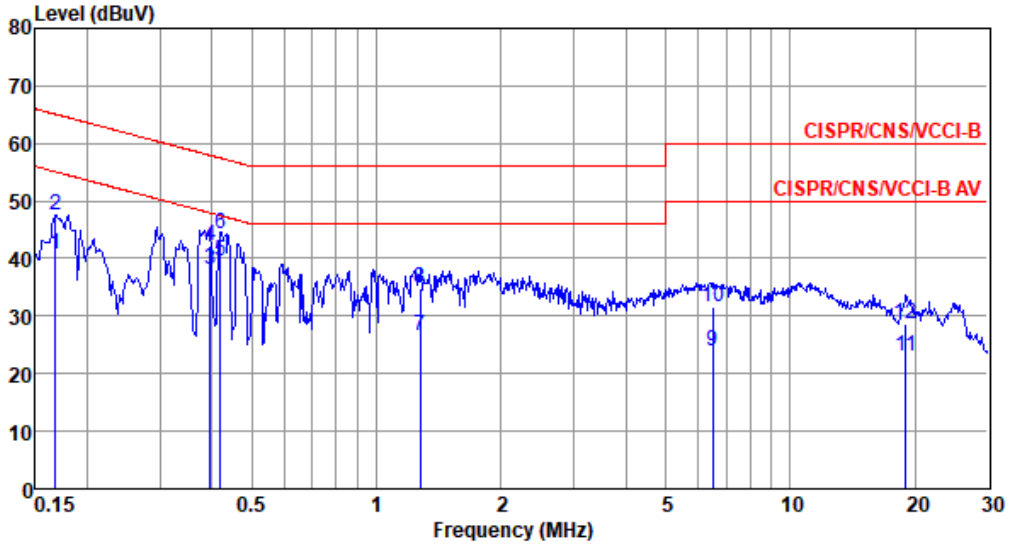

	Freq MHz	Level dBuV	Limit Line dBuV	Over Limit dB	Read Level dBuV	Factor dB	Cable loss dB	Aux dB	Remark
1	0.168	40.61	55.08	-14.47	30.67	9.65	0.07	0.22	Average
2	0.168	47.67	65.08	-17.41	37.73	9.65	0.07	0.22	QP
3	0.396	38.15	47.95	-9.80	28.10	9.64	0.08	0.33	Average
4	0.396	42.14	57.95	-15.81	32.09	9.64	0.08	0.33	QP
5*	0.419	39.58	47.46	-7.88	29.53	9.64	0.08	0.33	Average
6	0.419	44.19	57.46	-13.27	34.14	9.64	0.08	0.33	QP
7	1.276	26.45	46.00	-19.55	16.33	9.65	0.10	0.37	Average
8	1.276	34.88	56.00	-21.12	24.76	9.65	0.10	0.37	QP
9	6.488	23.80	50.00	-26.20	13.41	9.69	0.27	0.43	Average
10	6.488	31.64	60.00	-28.36	21.25	9.69	0.27	0.43	QP
11	19.021	22.93	50.00	-27.07	12.17	9.68	0.50	0.58	Average
12	19.021	28.55	60.00	-31.45	17.79	9.68	0.50	0.58	QP

Note 1: Level (dBuV) = Read Level (dBuV) + LISN Factor (dB) + Cable Loss (dB) + Aux (dB).
2: Over Limit (dB) = Level (dBuV) – Limit Line (dBuV).

Modulation Mode	be EHT320	**Test Freq. (MHz)**	6425
Power Phase	Neutral		

Test by : Joe Liao Temperature: 24°C Humidity: 64%

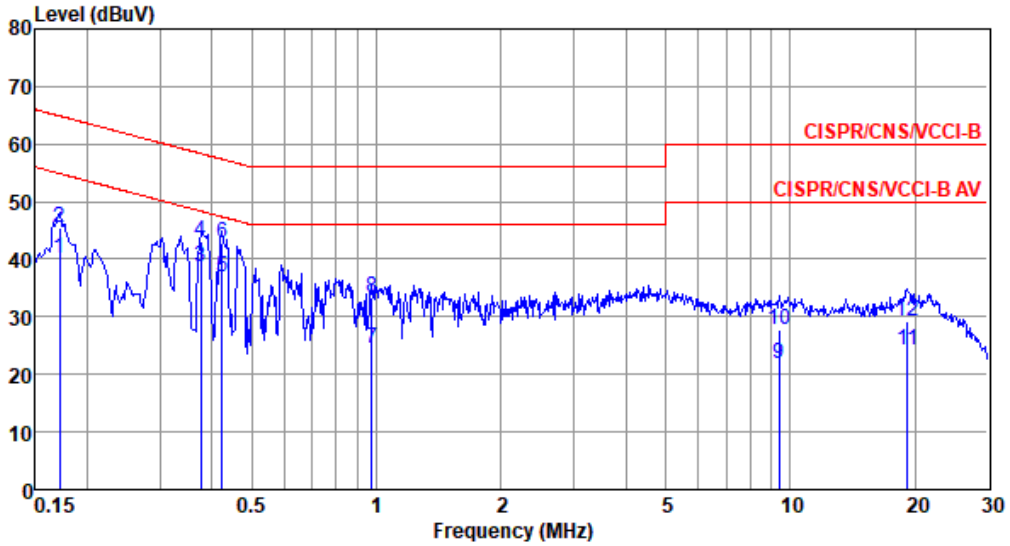

	Freq MHz	Level dBuV	Limit Line dBuV	Over Limit dB	Read Level dBuV	Factor dB	Cable loss dB	Aux dB	Remark
1	0.171	40.03	54.90	-14.87	30.16	9.66	0.07	0.14	Average
2	0.171	45.52	64.90	-19.38	35.65	9.66	0.07	0.14	QP
3*	0.377	38.72	48.34	-9.62	28.76	9.64	0.08	0.24	Average
4	0.377	43.06	58.34	-15.28	33.10	9.64	0.08	0.24	QP
5	0.424	36.80	47.37	-10.57	26.83	9.64	0.08	0.25	Average
6	0.424	42.77	57.37	-14.60	32.80	9.64	0.08	0.25	QP
7	0.974	24.40	46.00	-21.60	14.36	9.65	0.09	0.30	Average
8	0.974	33.35	56.00	-22.65	23.31	9.65	0.09	0.30	QP
9	9.401	21.91	50.00	-28.09	11.41	9.74	0.34	0.42	Average
10	9.401	27.65	60.00	-32.35	17.15	9.74	0.34	0.42	QP
11	19.224	24.07	50.00	-25.93	13.17	9.82	0.50	0.58	Average
12	19.224	29.25	60.00	-30.75	18.35	9.82	0.50	0.58	QP

Note 1: Level (dBuV) = Read Level (dBuV) + LISN Factor (dB) + Cable Loss (dB) + Aux (dB).
2: Over Limit (dB) = Level (dBuV) – Limit Line (dBuV).

Beamforming mode

Configuration 1: Model: SDG-8733v

Modulation Mode	be EHT320	Test Freq. (MHz)	6425
Power Phase	Line		

Test by : Joe Liao Temperature: 24°C Humidity: 64%

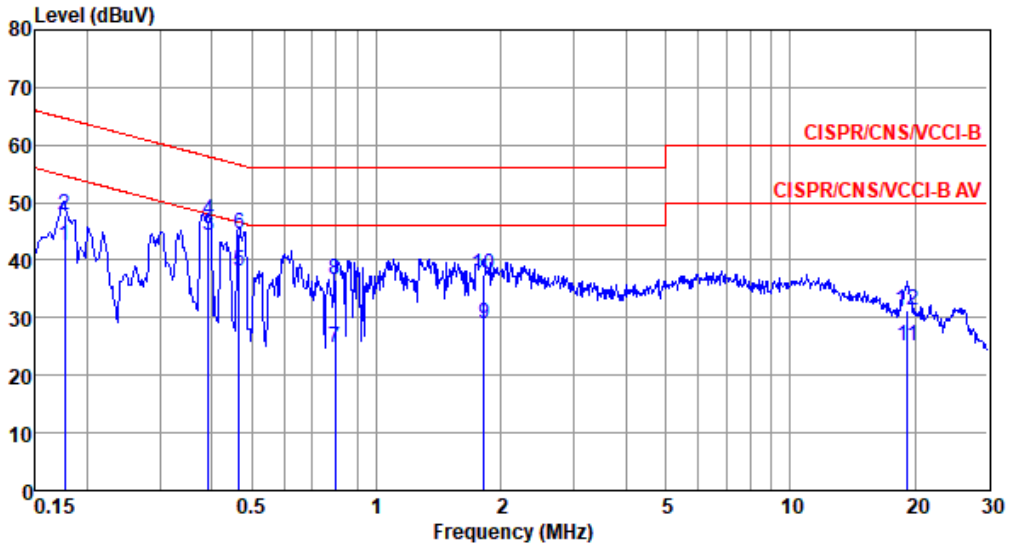

	Freq MHz	Level dBuV	Limit Line dBuV	Over Limit dB	Read Level dBuV	Factor dB	Cable loss dB	Aux dB	Remark
1	0.177	42.46	54.64	-12.18	32.51	9.65	0.07	0.23	Average
2	0.177	47.78	64.64	-16.86	37.83	9.65	0.07	0.23	QP
3*	0.393	44.21	47.99	-3.78	34.16	9.64	0.08	0.33	Average
4	0.393	46.92	57.99	-11.07	36.87	9.64	0.08	0.33	QP
5	0.466	37.97	46.58	-8.61	27.91	9.64	0.08	0.34	Average
6	0.466	44.47	56.58	-12.11	34.41	9.64	0.08	0.34	QP
7	0.796	24.68	46.00	-21.32	14.59	9.65	0.09	0.35	Average
8	0.796	36.64	56.00	-19.36	26.55	9.65	0.09	0.35	QP
9	1.819	29.00	46.00	-17.00	18.85	9.66	0.11	0.38	Average
10	1.819	37.46	56.00	-18.54	27.31	9.66	0.11	0.38	QP
11	19.224	25.14	50.00	-24.86	14.38	9.68	0.50	0.58	Average
12	19.224	31.38	60.00	-28.62	20.62	9.68	0.50	0.58	QP

Note 1: Level (dBuV) = Read Level (dBuV) + LISN Factor (dB) + Cable Loss (dB) + Aux (dB).
2: Over Limit (dB) = Level (dBuV) – Limit Line (dBuV).

Modulation Mode	be EHT320	**Test Freq. (MHz)**	6425
Power Phase	Neutral		

Test by : Joe Liao Temperature: 24°C Humidity: 64%

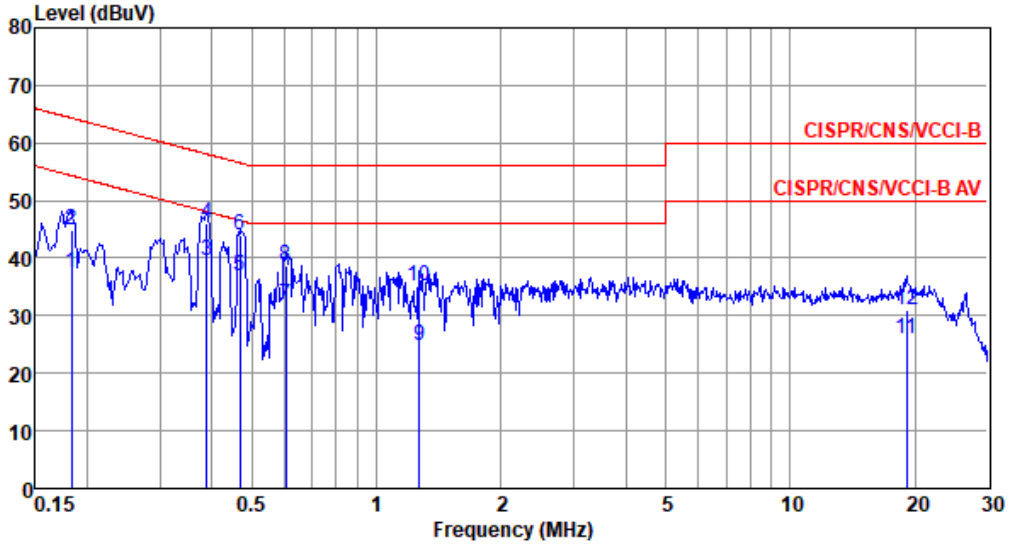

	Freq MHz	Level dBuV	Limit Line dBuV	Over Limit dB	Read Level dBuV	Factor dB	Cable loss dB	Aux dB	Remark
1	0.183	37.36	54.33	-16.97	27.48	9.65	0.07	0.16	Average
2	0.183	45.00	64.33	-19.33	35.12	9.65	0.07	0.16	QP
3*	0.389	39.58	48.08	-8.50	29.61	9.64	0.08	0.25	Average
4	0.389	46.19	58.08	-11.89	36.22	9.64	0.08	0.25	QP
5	0.469	37.02	46.54	-9.52	27.04	9.64	0.08	0.26	Average
6	0.469	43.90	56.54	-12.64	33.92	9.64	0.08	0.26	QP
7	0.604	31.79	46.00	-14.21	21.80	9.64	0.08	0.27	Average
8	0.604	38.66	56.00	-17.34	28.67	9.64	0.08	0.27	QP
9	1.269	24.93	46.00	-21.07	14.87	9.65	0.10	0.31	Average
10	1.269	35.03	56.00	-20.97	24.97	9.65	0.10	0.31	QP
11	19.122	26.01	50.00	-23.99	15.12	9.82	0.50	0.57	Average
12	19.122	31.07	60.00	-28.93	20.18	9.82	0.50	0.57	QP

Note 1: Level (dBuV) = Read Level (dBuV) + LISN Factor (dB) + Cable Loss (dB) + Aux (dB).
2: Over Limit (dB) = Level (dBuV) – Limit Line (dBuV).

Configuration 2: Model: SDG-8734v

Modulation Mode	be EHT320	**Test Freq. (MHz)**	6425
Power Phase	Line		

Test by : Joe Liao Temperature: 24°C Humidity: 64%

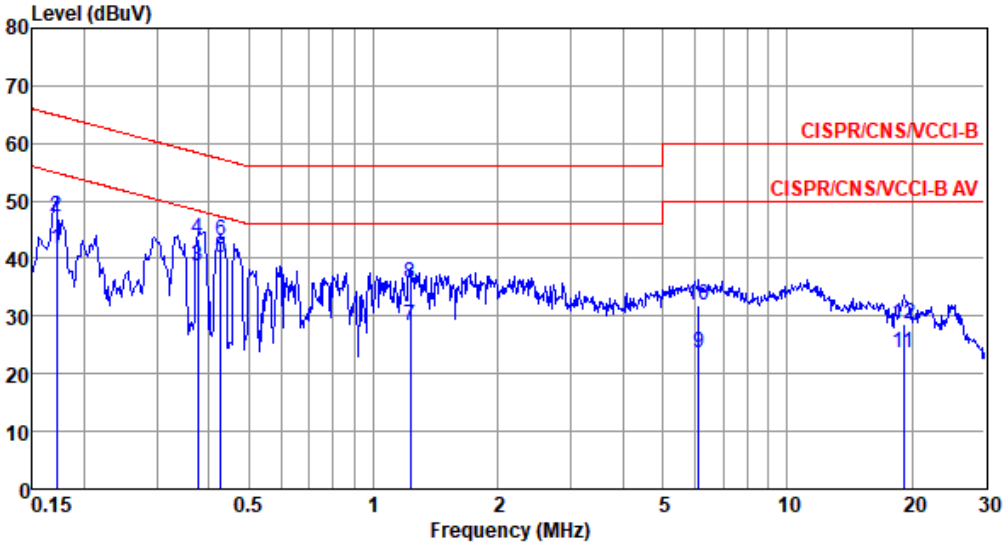

	Freq MHz	Level dBuV	Limit Line dBuV	Over Limit dB	Read Level dBuV	Factor dB	Cable loss dB	Aux dB	Remark
1	0.171	41.70	54.90	-13.20	31.76	9.65	0.07	0.22	Average
2	0.171	47.15	64.90	-17.75	37.21	9.65	0.07	0.22	QP
3	0.377	38.76	48.34	-9.58	28.72	9.64	0.08	0.32	Average
4	0.377	43.37	58.34	-14.97	33.33	9.64	0.08	0.32	QP
5*	0.428	40.03	47.29	-7.26	29.98	9.64	0.08	0.33	Average
6	0.428	43.15	57.29	-14.14	33.10	9.64	0.08	0.33	QP
7	1.229	28.29	46.00	-17.71	18.17	9.65	0.10	0.37	Average
8	1.229	35.68	56.00	-20.32	25.56	9.65	0.10	0.37	QP
9	6.121	23.68	50.00	-26.32	13.30	9.69	0.26	0.43	Average
10	6.121	31.76	60.00	-28.24	21.38	9.69	0.26	0.43	QP
11	19.122	23.60	50.00	-26.40	12.84	9.68	0.50	0.58	Average
12	19.122	28.67	60.00	-31.33	17.91	9.68	0.50	0.58	QP

Note 1: Level (dBuV) = Read Level (dBuV) + LISN Factor (dB) + Cable Loss (dB) + Aux (dB).
2: Over Limit (dB) = Level (dBuV) – Limit Line (dBuV).

Modulation Mode	be EHT320	**Test Freq. (MHz)**	6425
Power Phase	Neutral		

Test by : Joe Liao Temperature: 24°C Humidity: 64%

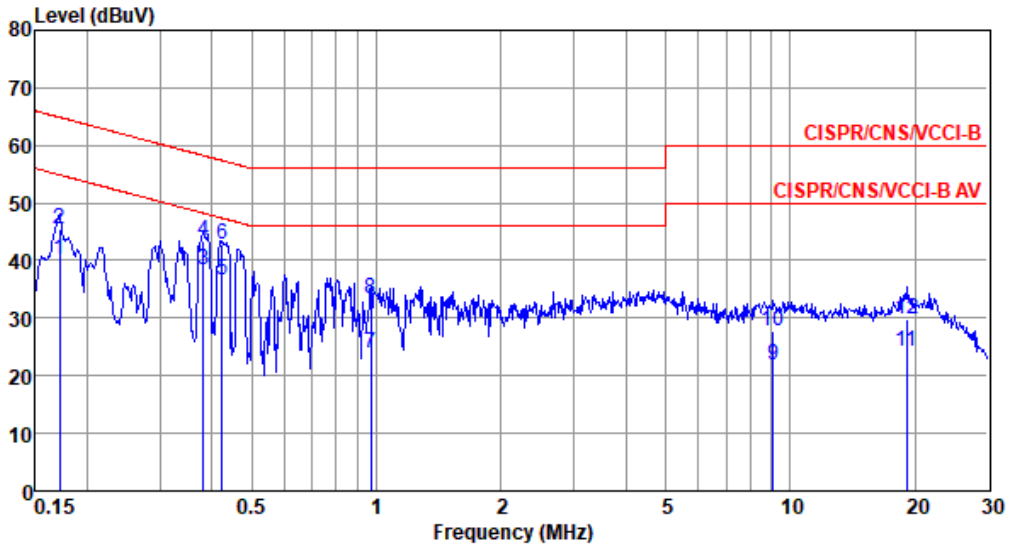

	Freq MHz	Level dBuV	Limit Line dBuV	Over Limit dB	Read Level dBuV	Factor dB	Cable loss dB	Aux dB	Remark
1	0.171	40.04	54.90	-14.86	30.17	9.66	0.07	0.14	Average
2	0.171	45.51	64.90	-19.39	35.64	9.66	0.07	0.14	QP
3*	0.381	38.42	48.25	-9.83	28.46	9.64	0.08	0.24	Average
4	0.381	43.48	58.25	-14.77	33.52	9.64	0.08	0.24	QP
5	0.424	36.75	47.37	-10.62	26.78	9.64	0.08	0.25	Average
6	0.424	42.83	57.37	-14.54	32.86	9.64	0.08	0.25	QP
7	0.968	23.88	46.00	-22.12	13.84	9.65	0.09	0.30	Average
8	0.968	33.30	56.00	-22.70	23.26	9.65	0.09	0.30	QP
9	9.107	21.76	50.00	-28.24	11.28	9.73	0.33	0.42	Average
10	9.107	27.70	60.00	-32.30	17.22	9.73	0.33	0.42	QP
11	19.122	24.30	50.00	-25.70	13.41	9.82	0.50	0.57	Average
12	19.122	29.75	60.00	-30.25	18.86	9.82	0.50	0.57	QP

Note 1: Level (dBuV) = Read Level (dBuV) + LISN Factor (dB) + Cable Loss (dB) + Aux (dB).
2: Over Limit (dB) = Level (dBuV) – Limit Line (dBuV).