GAMING & ENTERTAINMENT CENTER

WITH BUILT-IN SPEAKERS

User's Guide for Model ISBT789 v2282-01

For the most up-to-date version of this User's Guide, go to: www.iLiveElectronics.com

**TV not included*

Safety Instructions & Warnings

WARNING: To reduce the risk of electric shock, do not remove cover (or back). No user-serviceable parts inside. Refer servicing to qualified service personnel.

The exclamation point within an equilateral triangle is intended to alert the user to the presence of important operating and maintenance (servicing) instructions in the literature accompanying the appliance.

The lightning flash with arrowhead symbol, within an equilateral triangle, is intended to alert the user to the presence of uninsulated "dangerous voltage" within the product's enclosure that may be of sufficient magnitude to constitute a risk of electric shock to persons.

This symbol indicates that this product incorporates double insulation between hazardous mains voltage and user accessible parts.

WARNING: DO NOT INGEST BATTERY, CHEMICAL BURN HAZARD.

WARNING : This product can expose you to chemicals including lead, which is known to the State of California to cause cancer and birth defects or other reproductive harm. For more information go to www.P65Warnings.ca.gov. **This product meets and complies with all Federal regulations.**

Important Safety Instructions

- Read these Instructions.
- Keep these Instructions.
- Heed all Warnings.
- Follow all instructions.
- Do not use this apparatus near water.
- Clean only with a dry cloth.
- Do not block any ventilation openings. Install in accordance with the manufacturer's instructions.
- Do not install near any heat sources such as radiators, heat registers, stoves, or other apparatus (including amplifiers) that produce heat.
- Do not defeat the safety purpose of the polarized or grounding - type plug. A polarized plug has two blades with one wider than the other. A grounding type plug has two blades and a third grounding prong. The wide blade or the third prong are provided for your safety. When the provided plug does not fit into your outlet, consult an electrician for replacement of the obsolete outlet.
- Protect the power cord from being walked on or pinched particularly at plugs, convenience receptacles, and the point where they exit from the apparatus.
- Only use attachments/accessories specified by the manufacturer.
- Unplug this apparatus during lightning storms or when unused for long periods of time.
- Refer all servicing to qualified service personnel. Servicing is required when the apparatus has been damaged in any way, such as power-supply cord or plug is damaged, liquid has been spilled or objects have fallen into the apparatus, the apparatus has been exposed to rain or moisture, does not operate normally, or has been dropped.
- Use only with a cart, stand, tripod, bracket, or table specified by the manufacturer, or sold with the apparatus. When a cart is used, use caution when moving the cart/apparatus combination to avoid injury from tip-over.

FCC Warnings

Warning: Changes or modifications to this unit not expressly approved by the party responsible for compliance could void the user's authority to operate the equipment.

NOTE: This equipment has been tested and found to comply with the limits for a Class B digital device, pursuant to Part 15 of the FCC Rules. These limits are designed to provide reasonable protection against harmful interference in a residential installation. This equipment generates, uses, and can radiate radio frequency energy and, if not installed and used in accordance with the instructions, may cause harmful interference to radio communications. However, there is no guarantee that interference will not occur in a particular installation. If this equipment does cause harmful interference to radio or television reception, which can be determined by turning the equipment off and on, the user is encouraged to try to correct the interference by one or more of the following measures:

- Reorient or relocate the receiving antenna.
- Increase the separation between the equipment and receiver.
- Connect the equipment into an outlet on a circuit different from that to which the receiver is connected.
- Consult the dealer or an experienced radio/TV technician for help.

FCC Radiation Exposure Statement

The device has been evaluated to meet general RF exposure requirement. The device can be used in fixed/mobile（min 20cm）exposure condition without restriction.

Additional Warnings and Precautions

- CAUTION: TO PREVENT ELECTRIC SHOCK, MATCH WIDE BLADE OF PLUG TO WIDE SLOT, FULLY INSERT.
- Mains plug is used as disconnect device and it should remain readily operable during intended use. In order to disconnect the apparatus from the mains completely, the mains plug should be disconnected form the mains socket outlet completely.
- WARNING: Shock hazard - Do Not Open.
- Caution and marking information is located at the rear or bottom of the apparatus.
- WARNING: To reduce the risk of fire or electric shock, do not expose this apparatus to rain, moisture, dripping, or splashing.
- Objects filled with liquids, such as vases, shall not be placed on the apparatus.
- **CAUTION**: Use of controls or adjustments or performance of procedures other than those specified may result in hazardous radiation exposure.
- WARNING: Changes or modifications to this unit not expressly approved by the party responsible for compliance could void the user's authority to operate the equipment
- WARNING: Do not place this unit directly onto furniture surfaces with any type of soft, porous, or sensitive finish. As with any rubber compound made with oils, the feet could cause marks or staining where the feet reside. We recommend using a protective barrier such as a cloth or a piece of glass between the unit and the surface to reduce the risk of damage and/or staining.
- WARNING: Use of this unit near fluorescent lighting may cause interference regarding use of the remote. If the unit is displaying erratic behavior move away from any fluorescent lighting, as it may be the cause.
- CAUTION: Danger of explosion if battery is incorrectly replaced. Replace only with the same or equivalent type.
- Battery shall not be exposed to excessive heat such as sunshine, fire or the like.
- Keep new and used batteries away from children. If the battery compartment does not close securely, stop using the product and keep it away from children.
- If you think batteries might have been swallowed or placed inside any part of the body, seek immediate medical attention.
- Do not mix old and new batteries.
- Completely replace all old batteries with new ones.
- Do not mix alkaline, standard (carbon-zinc), or rechargeable (ni-cad, ni-mh, etc) batteries.
- Batteries should be recycled or disposed of as per state and local guidelines.

Table of Contents

Setup
Features & Specifications - 5
Power - 5
Includes - 5

Orientation
Top & Front View - 6
Source Mode Indicator LED - 6
Speaker Controls (Top) - 7
Speaker Inputs (Rear) - 7

Remote
Functions & Controls - 8
Remote Battery - 8

Connecting Devices
Initial Bluetooth Connection and Playing Audio - 9
Previously Connected Devices - 9
Troubleshooting - 9
Line In - 9
Stereo RCA Inputs (Aux In) & Coaxial Audio Input - 10
Optical Input - 11

Company Information
Contact Information - 12
International Support - 12
Warranty - 12

Setup

Features & Specifications

- Wooden Table with built-in speakers
- Table can support up to 110lbs (50kg)
- Bluetooth: range 60 ft.
- 2 channel stereo sound
- Digital volume control
- Full-function remote
- Optical audio input
- Aux In (RCA stereo audio inputs)
- Line In (3.5mm audio input)
- Coaxial audio input

Includes

- Remote control with 1 CR2025 battery pre-installed
- Optical audio cable
- AC/DC power adapter
- Assembly hardware and instructions

Power

Plug the power cord into the DC Input on the back of the speaker and a standard wall outlet.

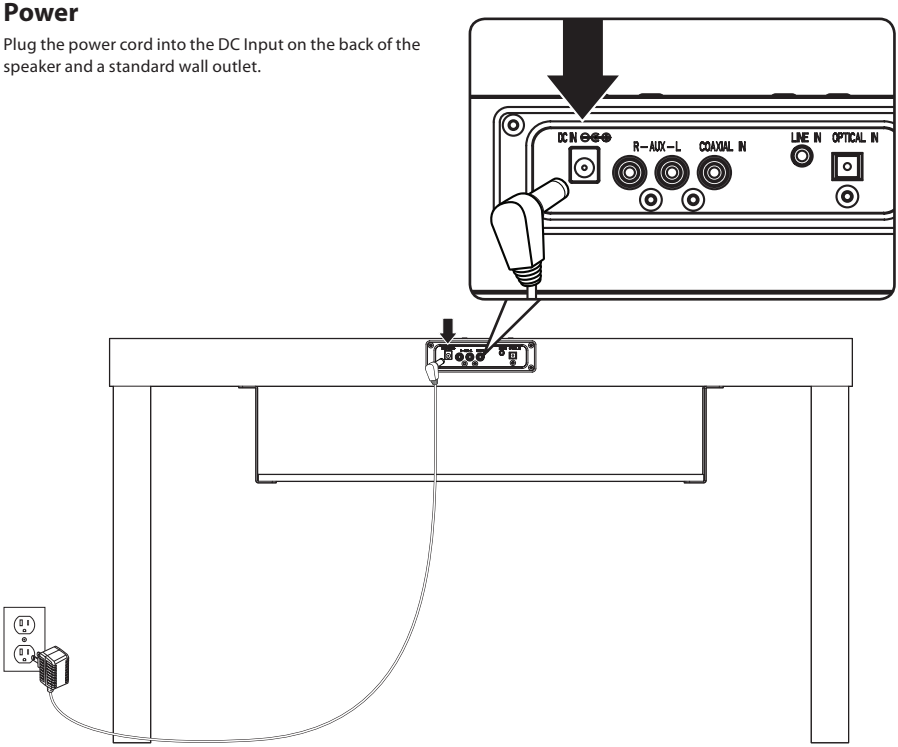

Orientation

Top & Front View

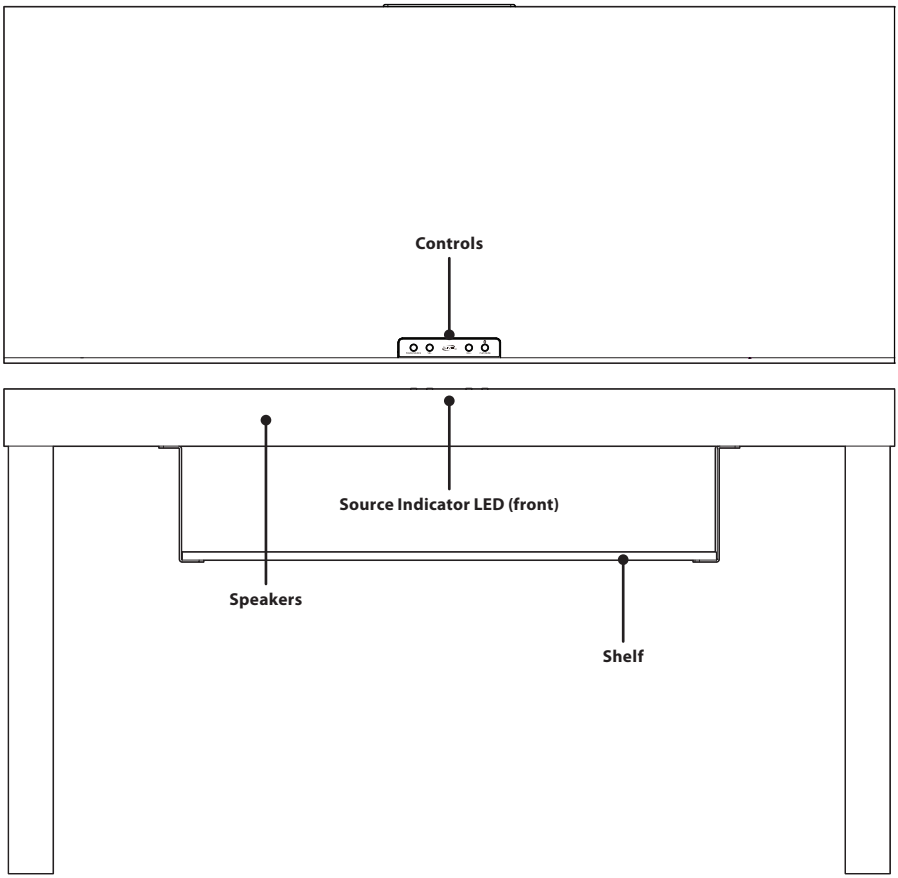

Source Mode Indicator LED

STATUS	INDICATOR LIGHT
Power Off	Red Light
Bluetooth Standby/Pairing	Slow/Quick Flashing Blue Light
Bluetooth Connected	Solid Blue Light
Optical Mode	Orange Light
Aux In (RCA) Mode	White Light
Coaxial Mode	Purple Light
Line In Mode	Green Light

Speaker Controls (Top)

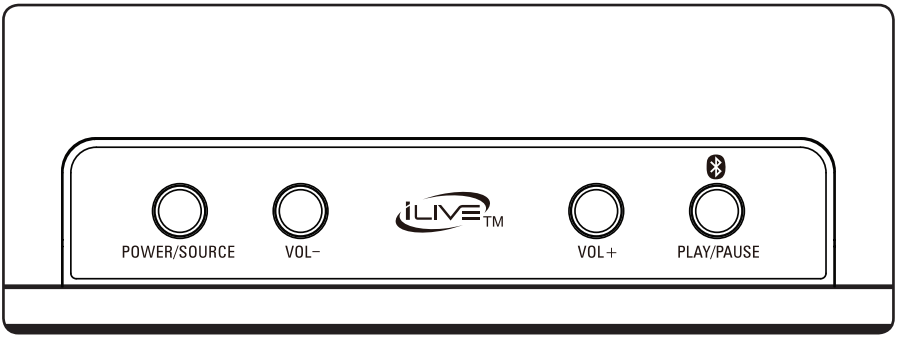

Power/Source
Press and hold to power the unit ON or OFF.
Press to switch audio source to Bluetooth, Optical, Aux In, Coaxial, or Line In modes.

Volume
Press to adjust volume.

Pair/Play/Pause
Press and hold to begin pairing to a Bluetooth device.
Press to play or pause audio (BLUETOOTH MODE).

Speaker Inputs (Rear)

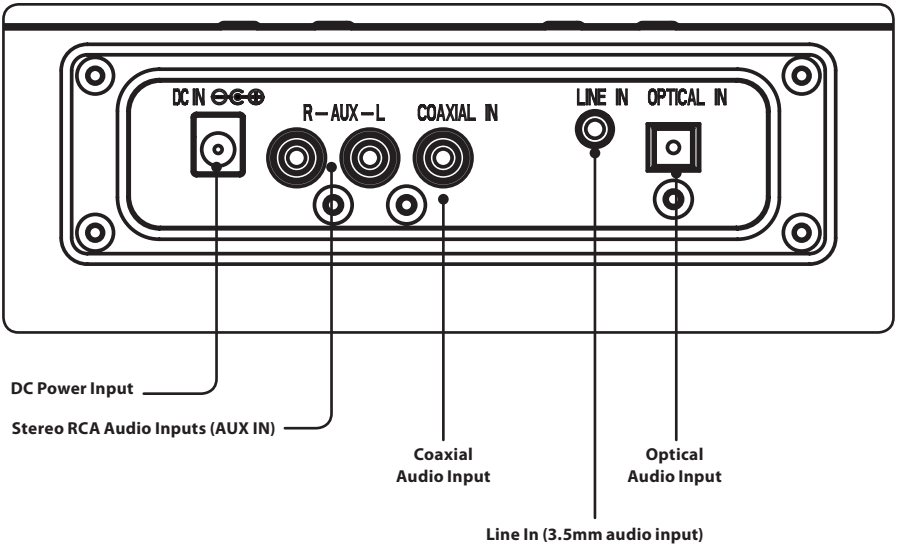

Remote

Functions & Controls

Power
Press to turn the unit ON or OFF.

Press to switch to Bluetooth Mode.

Optical
Press to switch to Optical mode.

Coaxial
Press to switch to Coaxial mode.

AUX
Press to switch to Aux In (RCA) Mode.

Line In
Press to switch to Line In mode.

Source
Press to switch source mode.

Standard, Talk, Movie, Music
Press to change the equalizer mode.

POWER
MUTE
OPTICAL
COAXIAL
AUX
LINE IN
SOURCE
iLIVE™
STANDARD
TALK
MOVIE
MUSIC
VOLUME

Mute
Press to mute the volume.

Skip Back/Fwd
In Bluetooth mode, press to skip the selected track.

Pair/Play/Pause
In Bluetooth mode, press and hold to pair. Press to play or pause audio.

Volume
Press to adjust the volume.

Remote Battery

Remote control: requires 1 CR2025 button cell type battery (included).

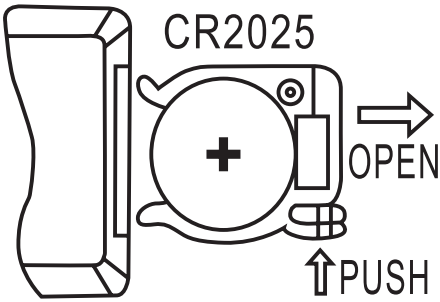

Connecting Devices

Initial Bluetooth Connection and Playing Audio

1. Power on the sound bar by pressing and holding the **Power** button. A voice will say, "Bluetooth," and the LED indicator will slowly flash blue. When pairing, remain within 3 feet of the Bluetooth device.
2. Using the controls on your Bluetooth device, select **ISBT789** in the Bluetooth Settings to pair. If need be, refer to the user's manual for your specific device for more information.
3. When successfully paired, a voice will announce, "Bluetooth is connected," and the LED indicator will turn solid blue. Audio from the connected Bluetooth device will now be heard through the speakers.
4. Use the controls on the connected Bluetooth device to select and play audio. Use the speakers' controls or the connected Bluetooth device to play, pause, and adjust the volume level.
5. After initial pairing, press and hold ⏻ until the voice prompt says, "Power on." The speaker will power ON and automatically connect to the last Bluetooth device used. **Note:** If your device should become unpaired or you find it is unable to connect, press & hold the ✱ button (▶|| on the remote) to enter to Pairing Mode. A voice will announce, "Bluetooth is connecting," and you can connect to the speaker manually.

Previously Connected Devices

- The sound bar can remember multiple Bluetooth devices and will always try to reconnect to the last device used.
- To reconnect to a different device, turn off Bluetooth on unwanted devices, then access the Bluetooth settings menu on the device you wish to use and select **ISBT789.**

Troubleshooting

If the sound bar should become unpaired or will not connect normally, follow these steps in your device's Bluetooth Settings Menu.

- Delete the sound bar ("Forget This Device").
- Turn Bluetooth OFF, then ON again, and repeat the **Initial Bluetooth Connection** steps.

Line In

Requires a 3.5mm audio cable (not included).

1. Connect a 3.5mm audio cable to the **Line In** on the unit and the **audio output/headphone jack** on an audio device.
2. Power ON the sound bar and press **Source** on the sound bar or **Line In** on the remote to select **Line In Mode.** A voice will announce the source mode and the indicator will turn green.
3. Use the controls on the connected device to select and play audio. Be sure the volume on your connected device is audible when you begin playing.

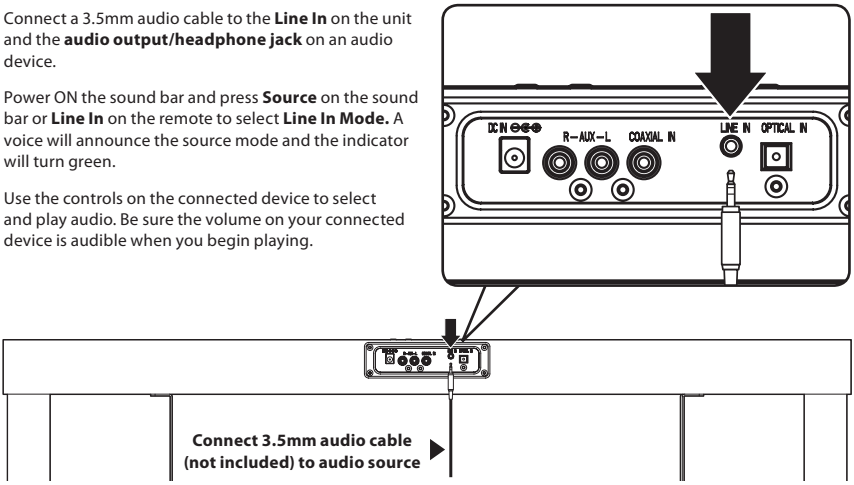

Connecting Devices

Stereo RCA Inputs (Aux In) & Coaxial Audio Input

Requires RCA stereo audio cable (not included) or Coaxial audio cable (not included). When connecting RCA stereo audio plugs (Red/White), match them to their corresponding color coded ports.

1. Connect an RCA stereo audio cable to the **Aux In** ports on the sound bar and the RCA audio outputs on a television or other audio source. If using a Coaxial audio cable, connect it to the **Coaxial In** on the sound bar.

2. Power ON the sound bar and press **Source** on the sound bar or **Aux In** on the remote to select **Aux In Mode.** If using a Coaxial audio cable, select **Coaxial Mode.** A voice will announce the source mode and the indicator will turn white for Aux In, and purple for Coaxial.

3. Audio played through the television or other source should now be heard through the speakers.

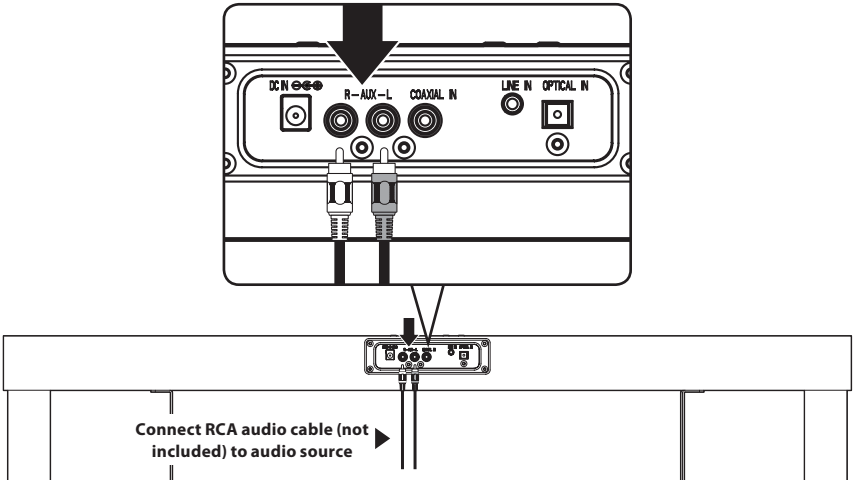

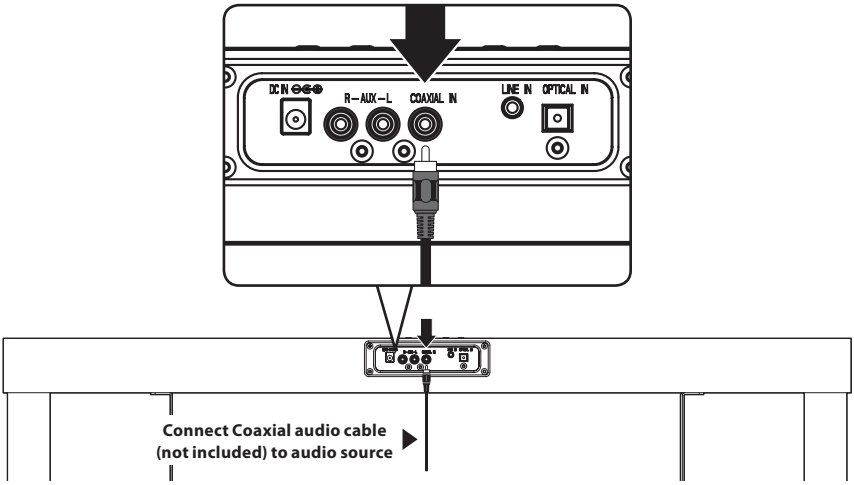

Optical Input

Requires an audio source with an Optical Audio Output and a Digital Optical Audio Cable (included).

1. Using a Digital Optical Audio Cable, connect the **Optical Input** on the sound bar to the Optical Output on your audio source (TV, amplifier, etc.).
2. Power ON the sound bar and press **Optical** on the remote or **Source** on the sound bar to select **Optical Mode.** A voice will announce the source mode and the indicator will turn orange.
3. On the connected audio source (TV, amplifier, etc.), be sure the audio settings are set to PCM or Optical Audio.
4. Audio played through the connected audio source (TV, amplifier, etc.) should now be heard through the speakers.

Important tips for optical audio:

- Use the correct optical audio cable and make sure that it is firmly seated in both source and sound bar sockets.
- Optical audio output is activated from the audio source (a red light should be visible from the optical socket). It may be labeled SPDIF in the settings menu of the source.
- The optical output source should be set to output PCM and not Dolby Digital.

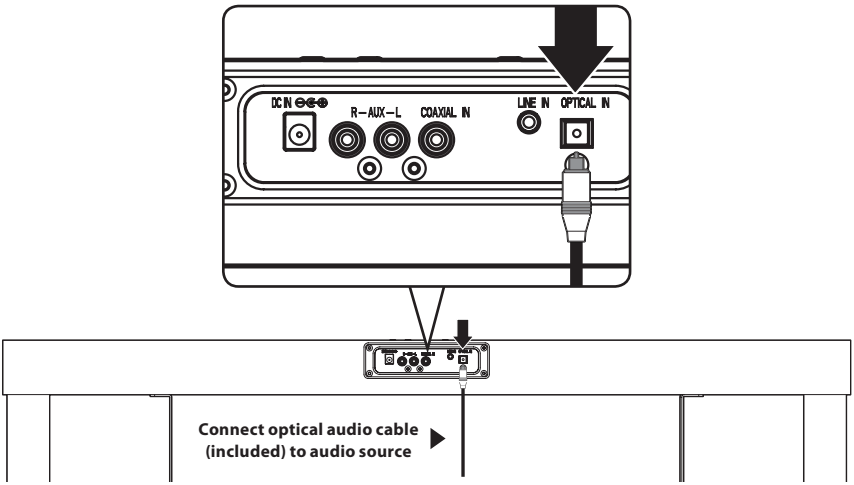

Company Information

Contact Information

Website: www.iLiveElectronics.com

Email Support: prodinfo@dpiinc.com

Email Parts: partsinfo@dpiinc.com

Phone Support: 1-888-999-4215

Warranty

For Warranty Information and the most up-to-date version of this User's Guide, go to:
www.iLiveElectronics.com

International Support

To download this User's Guide in English, Spanish, and French, or to get answers to frequently asked questions, visit the support section at: **www.iLiveElectronics.com**

Para descargar este Manual del Usuario en inglés, español y francés, o para obtener respuestas a preguntas frecuentes, visite la sección de apoyo en: **www.iLiveElectronics.com**

Pour télécharger ce guide de l'utilisateur en anglais, espagnol ou français, ou pour obtenir des réponses à des questions fréquemment posées, consultez la rubrique d'assistance sur: **www.iLiveElectronics.com**

Protect for Today
Sustain for Tomorrow

Copyright © 2019 Digital Products International (DPI, Inc.) All other trademarks appearing herein are the property of their respective owners. Specifications are subject to change without notice.