Quick Start Guide

MetroLinq™ 2.5G Outdoor 60 GHz PTP/PTMP + 5 GHz

ML2.5-60-35 | ML2.5-60-19 | ML2.5-60-BF-18

Welcome to MetroLinq™

Interference-Free Gigabit Wireless

Unboxing

After opening the box, you will find…

- MetroLinq™ (ML2.5-60-35, ML2.5-60-19, or ML2.5-60-BF-18)
- PoE Power Supply
- Power Cable

Tools/Items Required

- 13 mm Socket Wrench
- Flat-Head Screwdriver
- Ethernet Cables

Options

- Standard Bracket ICC-BRACKET-STD
- Long Range Precision Bracket ICC-BRACKET-LR
- Alignment Scope ICC-SCOPE-9x50

For helpful training and user-case information, please go to ignitenet.com/support

Assembly

The MetroLinq™ Standard Bracket and Long Range Precision Bracket (both ordered separately) are designed for wall and pole mounting (25 mm - 80 mm pole diameter). Choose what is best for your location and select hardware accordingly.

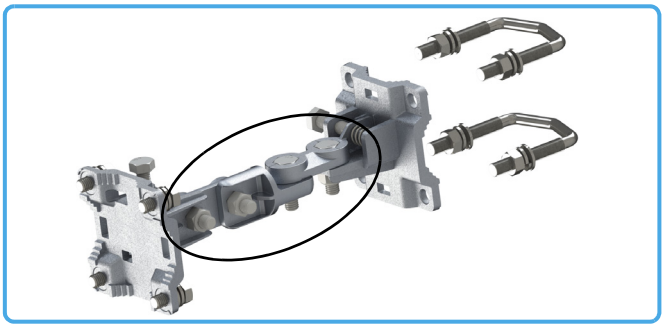

1. Ensure all four position-locking bolts on the Standard Bracket are tight before installing.

2. Install the Standard Bracket onto MetroLinq™ using four M8 bolts, lock washers, and flat washers.

Grounding

1. Ensure the structure on which the unit is to be mounted is properly grounded and in compliance with ETSI ETS 300 253.
2. Verify that there is a good electrical connection to a grounding point (no paint or isolating surface treatment). Use the included (M4) screw to attach a grounding wire (not included) to the grounding point on the unit, and then to ground.

Caution: The earth connection must not be removed unless all supply connections have been disconnected.

Power Up

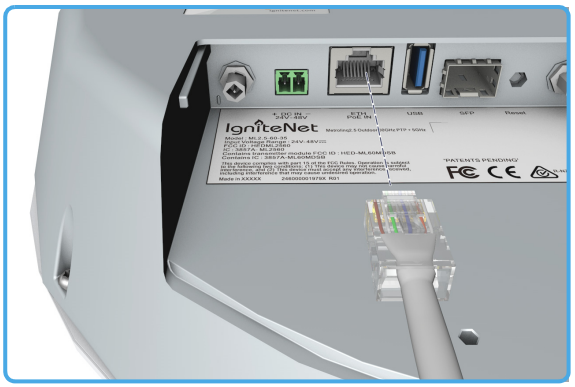

1. Connect an Ethernet cable from the MetroLinq™ ETH PoE IN port to the PoE port on the power supply.

2. Connect Ethernet cable from the “LAN” port on the power supply to your LAN device.
3. Connect the power cord to a nearby AC power source.

Standard Bracket Alignment

IgniteNet strongly recommends using the ICC-SCOPE-9x50 Alignment Scope for alignment. To install, place the scope on top of the MetroLinq™ housing and secure it with its thumb screw.

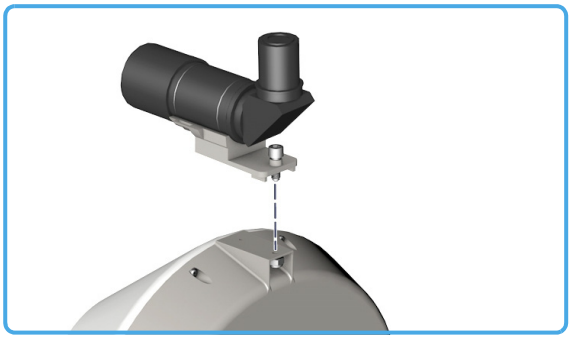

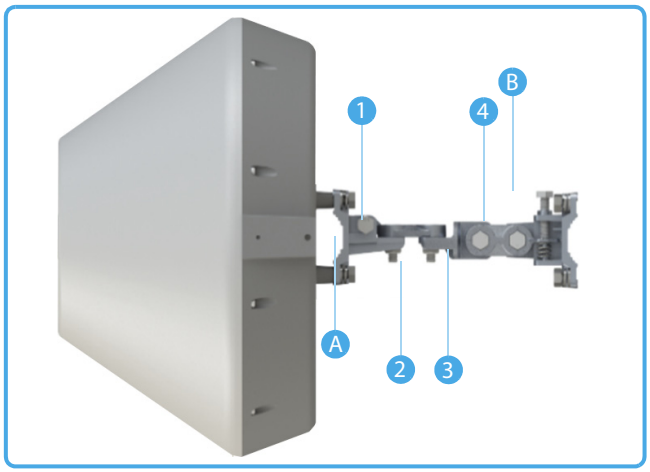

Note: Do not adjust bolts A and B without first loosening 1 and 4 respectively.

1. Loosen coarse adjustment bolts 2 and 3 and set initial alignment. Don’t worry, you don’t have to be too accurate yet. After you have set the coarse alignment, tighten bolts 2 and 3.
2. Loosen the horizontal fine-tune adjustment bolt 4. Use fine-tune bolt "B" to optimize the horizontal position. Re-tighten bolt 4.
3. Loosen the vertical fine-tune adjustment bolt 1. Use fine-tune bolt "A" to optimize the vertical position. Re-tighten bolt 1.
4. Initial alignment should be based on optical or visual alignment. After you achieve this, repeat steps 2 and 3 while watching the 60 GHz signal strength LED. Optimize position to the LED indicator.
5. Ensure all bolts are fully tightened, remove the alignment scope (if installed), and enjoy Gigabit interference-free wireless.

Software

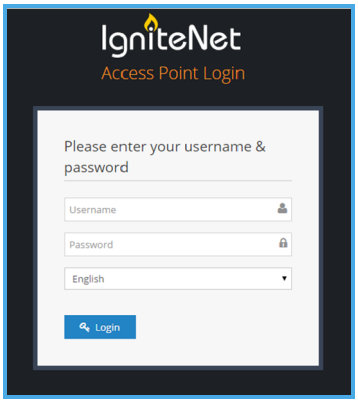

1. To configure your MetroLinq, connect your computer to the device through the LAN port of the power supply or directly to the ETH1 port on the device.

   The default IP mode is DHCP client, so if the device obtains an address from a DHCP server on the network, then use that IP (you can use the Discovery Tool from the IgniteNet support site to find the DHCP address). If the device does not obtain a DHCP address, it reverts to the fallback IP of 192.168.1.20 and you can access it on that IP. Direct your web browser to the correct IP and log in.

   username: root
   password: admin123

2. After you have logged in, follow the steps in the Setup Wizard to configure the device for your network.

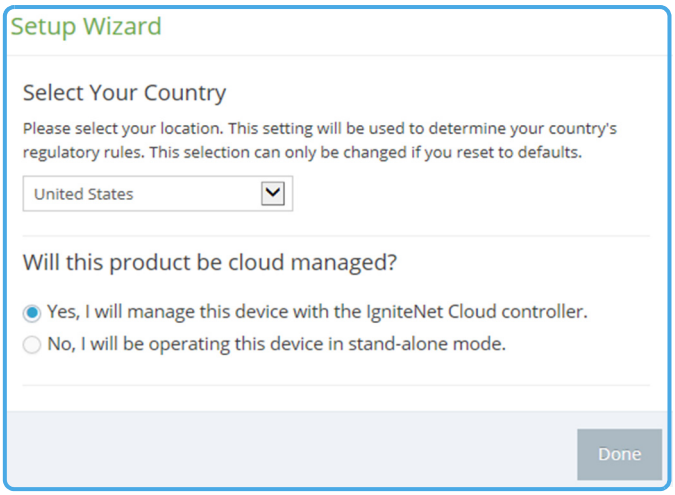

2. After you have logged in, follow the steps in the Setup Wizard to configure the device for your network.

For more configuration details and training, please go to ignitenet.com/support

Safety and Regulatory Information

FCC Class B

This device complies with Part 15 of the FCC Rules. Operation is subject to the following two conditions: (1) This device may not cause harmful interference, and (2) this device must accept any interference received, including interference that may cause undesired operation.

This equipment has been tested and found to comply with the limits for a Class B digital device, pursuant to Part 15 of the FCC Rules. These limits are designed to provide reasonable protection against harmful interference in a residential installation. This equipment generates, uses and can radiate radio frequency energy and, if not installed and used in accordance with the instructions, may cause harmful interference to radio communications. However, there is no guarantee that interference will not occur in a particular installation. If this equipment does cause harmful interference to radio or television reception, which can be determined by turning the equipment off and on, the user is encouraged to try to correct the interference by one of the following measures:

- Reorient or relocate the receiving antenna
- Increase the separation between the equipment and receiver
- Connect the equipment into an outlet on a circuit different from that to which the receiver is connected
- Consult the dealer or an experienced radio/TV technician for help

FCC Caution: Any changes or modifications not expressly approved by the party responsible for compliance could void the user's authority to operate this equipment.

This transmitter must not be co-located or operating in conjunction with any other antenna or transmitter.

The 5600-5650MHz band is disabled by software during manufacturing and cannot be changed by the end user. This device meets all the other requirements specified in Part 15E, Section 15.407 of the FCC Rules.

IMPORTANT NOTE:
Radiation Exposure Statement:

This equipment complies with FCC radiation exposure limits set forth for an uncontrolled environment. This equipment should be installed and operated with minimum distance 20 cm between the radiator and your body.

Professional installation is required.

Note: The country code selection is for non-US models only and is not available on all US models. Per FCC regulation, all Wi-Fi products marketed in the US must be fixed to US operation channels only.

Professional Installation Instructions

1. Installation personal

This product is designed for specific applications and needs to be installed by a qualified person who has RF and related rules knowledge. The general user shall not attempt to install or change the settings.

2. Installation location

The product shall be installed at a location where the radiating antenna can be kept 20 cm from nearby persons in normal operation conditions to meet regulatory RF exposure requirements.

3. External antenna
Use only the antennas that have been approved by the applicant. Non-approved antenna(s) may produce unwanted spurious or excessive RF transmitting power, which may lead to the violation of FCC/IC limits and is prohibited.

4. Installation procedure
Please refer to user's manual for details.

5. Warning
Please carefully select the installation position and make sure that the final output power does not exceed the limits set forcth in relevant rules. Violation of the rules could lead to serious federal penalties.

Instructions d'installation professionnelle

1. Installation
Ce produit est destiné à un usage spécifique et doit être installé par un personnel qualifié maîtrisant les radio-fréquences et les règles s'y rapportant. L'installation et les réglages ne doivent pas être modifiés par l'utilisateur final.

2. Emplacement d'installation
En usage normal, afin de respecter les exigences réglementaires concernant l'exposition aux radio-fréquences, ce produit doit être installé de façon à respecter une distance de 20 cm entre l'antenne émettrice et les personnes.

3. Antenne externe
Utiliser uniquement les antennes approuvées par le fabricant. L'utilisation d'autres antennes peut conduire à un niveau de rayonnement essentiel ou non essentiel dépassant les niveaux limites définis par FCC/IC, ce qui est interdit.

4. Procedure d'installation
Consulter le manuel d'utilisation.

5. Avertissement
Choisir avec soin la position d'installation et s'assurer que la puissance de sortie ne depasse pas les limites en vigueur. La violation de cette règle peut conduire à de sérieuses pénalites fédérales.

IC Statement
This device complies with Industry Canada's licence-exempt RSSs. Operation is subject to the following two conditions:

(1) This device may not cause interference; and

(2) This device must accept any interference, including interference that may cause undesired operation of the device.

Le présent appareil est conforme aux CNR d'Industrie Canada applicables aux appareils radio exempts de licence. L'exploitation est autorisée aux deux conditions suivantes : (1) l'appareil ne doit pas produire de brouillage, et (2) l'utilisateur de l'appareil doit accepter tout brouillage radioélectrique subi, même si le brouillage est susceptible d'en compromettre le fonctionnement.

This radio transmitter (IC: 3857A-ML2560) has been approved by Industry Canada to operate with the antenna types listed below with the maximum permissible gain indicated. Antenna types not included in this list, having a gain greater than the maximum gain indicated for that type, are strictly prohibited for use with this device.

Le présent émetteur radio (IC: 3857A-ML2560) a été approuvé par Industrie Canada pour fonctionner avec les types d'antenne énumérés ci-dessous et ayant un gain admissible maximal d'antenne. Les types d'antenne non inclus dans cette liste, ou dont le gain est supérieur au gain maximal indiqué, sont strictement interdits pour l'exploitation de l'émetteur.

5G Antenna List:

Ant.	Brand	P/N	Antenna Type	Connector	Gain (dBi)	
					Band 1	Band 4
1	Accton	120G00000176X	Dish	N/A	10.1	12.1

60G Antenna List:

Ant.	Brand	P/N	Antenna Type	Connector	Gain (dBi)
1	Accton	120300000225X	Dish	N/A	17.2

The maximum antenna gain permitted for devices in the band 5725-5850 MHz shall be such that the equipment still complies with the e.i.r.p. limits specified for point-to-point and non-point-to-point operation as appropriate.

Le gain maximal d'antenne permis (pour les dispositifs utilisant la bande 5725-5850 MHz) doit se conformer à la limite de p.i.r.e. spécifiée pour l'exploitation point à point et non point à point, selon le cas.

IMPORTANT NOTE:
IC Radiation Exposure Statement:
This equipment complies with IC RSS-102 radiation exposure limits set forth for an uncontrolled environment. This equipment should be installed and operated with minimum distance 23 cm between the radiator & your body.

Cet équipement est conforme aux limites d'exposition aux rayonnements IC établies pour un environnement non contrôlé. Cet équipement doit être installé et utilisé avec un minimum de 23 cm de distance entre la source de rayonnement et votre corps.

CE Mark
CE Mark Declaration of Conformance for EMI and Safety (EEC)

This is a class B product. In a domestic environment, this product may cause radio interference, in which case the user may be required to take adequate measures.

National Restrictions
This device is intended for home and office use in all EU countries (and other countries following the EU directive 1999/5/EC) without any limitation except for the countries mentioned below:

Country	Restriction	Reason/Remark
Bulgaria	None	General authorization required for outdoor use and public service
France	Outdoor use limited to 10 mW e.i.r.p. within the band 2454-2483.5 MHz	Military Radiolocation use. Refarming of the 2.4 GHz band has been ongoing in recent years to allow current relaxed regulation. Full implementation planned 2012
italy	None	If used outside of own premises, general authorization is required
Luxembourg	None	General authorization required for network and service supply(not for spectrum)

Country	Restriction	Reason/Remark
Norway	Implemented	This subsection does not apply for the geographical area within a radius of 20 km from the centre of Ny-Ålesund
Russian Federation	None	Only for indoor applications

Note: Do not use the product outdoors in France.

Europe - EU Declaration of Conformity

This device complies with the essential requirements of the R&TTE Directive 1999/5/EC. The following test methods have been applied in order to prove presumption of conformity with the essential requirements of the R&TTE Directive 1999/5/EC:

- EN 60950-1:2006+A11:2009+A1:2010+A12:2011+A2:2013
  Safety of Information Technology Equipment.
- EN 300 328 V1.8.1: 2012
  Electromagnetic compatibility and Radio spectrum Matters (ERM); Wideband transmission systems; Data transmission equipment operating in the 2,4 GHz ISM band and using wide band modulation techniques; Harmonized EN covering essential requirements under article 3.2 of the R&TTE Directive.
- EN 301 489-1 V1.9.2 (2011-09)
  EN 301 489-7 V1.3.1/ 2005
  Electromagnetic compatibility and Radio spectrum Matters (ERM); Electromagnetic Compatibility (EMC) standard for radio equipment and services; Part 17: Specific conditions for 2.4 GHz wideband transmission systems and 5 GHz high performance RLAN equipment.
- EN 55022 2010 + AC: 2011
  Limits and methods of measurement of radio disturbance characteristics of information technology equipment.
- EN 55024: 2010
  Information technology equipment immunity characteristics limits and methods of measurement.
- EN 62311: 2008
  Assessment of electronic and electrical equipment related to human exposure restrictions for electromagnetic fields (0 Hz - 300 GHz).

This device is a 2.4 GHz wideband transmission system (transceiver), intended for use in all EU member states and EFTA countries, except in France and Italy where restrictive use applies.

In Italy the end-user should apply for a license at the national spectrum authorities in order to obtain authorization to use the device for setting up outdoor radio links and/or for supplying public access to telecommunications and/or network services.

This device may not be used for setting up outdoor radio links in France and in some areas the RF output power may be limited to 10 mW EIRP in the frequency range of 2454 - 2483.5 MHz. For detailed information the end-user should contact the national spectrum authority in France.

The Declaration of Conformity (DoC) can be obtained from www.ignitenet.com -> support -> download -> declarations & certifications.

This equipment may be operated in:

AT	DK	DE	IE	LU	PL	ES	LI
BE	EE	GR	IT	MT	PT	SE	BG
CY	FI	HU	LV	NL	SI	CH	RO
CZ	FR	IS	LT	NO	SK	GB	TR

Bulgarian Български	С настоящето, IgniteNet декларира, че това безжично устройство е в съответствие със съществените изисквания и другите приложими разпоредби на Директива 1999/5/EC.
Czech Česky	IgniteNet tímto prohlašuje, že tento Radio LAN device je ve shodě se základními požadavky a dalšími příslušnými ustanoveními směrnice 1999/5/ES.
Danish Dansk	Undertegnede IgniteNet erklærer herved, at følgende udstyr Radio LAN device overholder de væsentlige krav og øvrige relevante krav i direktiv 1999/5/EF
Dutch Nederlands	Hierbij verklaart IgniteNet dat het toestel Radio LAN device in overeenstemming is met de essentiële eisen en de andere relevante bepalingen van richtlijn 1999/5/EG Bij deze IgniteNet dat deze Radio LAN device voldoet aan de essentiële eisen en aan de overige relevante bepalingen van Richtlijn 1999/5/EC.
English	Hereby, IgniteNet, declares that this Radio LAN device is in compliance with the essential requirements and other relevant provisions of Directive 1999/5/EC.
Estonian Eesti	Käesolevaga kinnitab IgniteNet seadme Radio LAN device vastavust direktiivi 1999/5/EÜ põhinõuetele ja nimetatud direktiivist tulenevatele teistele asjakohastele sätetele.
Finnish Suomi	Valmistaja IgniteNet vakuuttaa täten että Radio LAN device tyyppinen laite on direktiivin 1999/5/EY oleellisten vaatimusten ja sitä koskevien direktiivin muiden ehtojen mukainen.
French Français	Par la présente IgniteNet déclare que l'appareil Radio LAN device est conforme aux exigences essentielles et aux autres dispositions pertinentes de la directive 1999/5/CE.
German Deutsch	Hiermit erklärt IgniteNet, dass sich dieser/diese/dieses Radio LAN device in Übereinstimmung mit den grundlegenden Anforderungen und den anderen relevanten Vorschriften der Richtlinie 1999/5/EG befindet. (BMWi) Hiermit erklärt IgniteNet die Übereinstimmung des Gerätes Radio LAN device mit den grundlegenden Anforderungen und den anderen relevanten Festlegungen der Richtlinie 1999/5/EG. (Wien)
Greek Ελληνική	με την παρουσα IgniteNet δηλωνει οτι radio LAN device συμμορφωνεται προσ τισ ουσιωδεισ απαιτησεισ και τισ λοιπεσ σχετικεσ διαταξεισ τησ οδηγιασ 1999/5/εκ.
Hungarian Magyar	Alulírott, IgniteNet nyilatkozom, hogy a Radio LAN device megfelel a vonatkozó alapvető követelményeknek és az 1999/5/EC irányelv egyéb előírásainak.
Italian Italiano	Con la presente IgniteNet dichiara che questo Radio LAN device è conforme ai requisiti essenziali ed alle altre disposizioni pertinenti stabilite dalla direttiva 1999/5/CE.

Latvian Latviski	Ar šo IgniteNet deklarē, ka Radio LAN device atbilst Direktīvas 1999/5/EK būtiskajām prasībām un citiem ar to saistītajiem noteikumiem.
Lithuanian Lietuvių	Šiuo IgniteNet deklaruoja, kad šis Radio LAN device atitinka esminius reikalavimus ir kitas 1999/5/EB Direktyvos nuostatas.
Maltese Malti	Hawnhekk, IgniteNet, jiddikjara li dan Radio LAN device jikkonforma mal-ħtiġijiet essenzjali u ma provvedimenti oħrajn relevanti li hemm fid-Dirrettiva 1999/5/EC.
Polish Polski	Niniejszym IgniteNet oświadcza, że Radio LAN device jest zgodny z zasadniczymi wymogami oraz pozostałymi stosownymi postanowieniami Dyrektywy 1999/5/EC.
Portuguese Português	IgniteNet declara que este Radio LAN device está conforme com os requisitos essenciais e outras disposições da Directiva 1999/5/CE.
Romanian Română	IgniteNet declară că acest dispozitiv fără fir respectă cerinţele esenţiale precum şi alte dispoziţii relevante ale Directivei 1999/5/EC.
Slovak Slovensky	IgniteNet týmto vyhlasuje, že Radio LAN device spĺňa základné požiadavky a všetky príslušné ustanovenia Smernice 1999/5/ES.
Slovenian Slovensko	IgniteNet izjavlja, da je ta radio LAN device v skladu z bistvenimi zahtevami in ostalimi relevantnimi določili direktive 1999/5/ES.
Spanish Español	Por medio de la presente IgniteNet declara que el Radio LAN device cumple con los requisitos esenciales y cualesquiera otras disposiciones aplicables o exigibles de la Directiva 1999/5/CE
Swedish Svenska	Härmed intygar IgniteNet att denna Radio LAN device står I överensstämmelse med de väsentliga egenskapskrav och övriga relevanta bestämmelser som framgår av direktiv 1999/5/EG.
Turkish Turk	IgniteNet bu kablosuz cihazın temel gereksinimleri ve 1999/5/EC yonergesindeki ilgili koşulları karşıladığını beyan eder.

NCC Statement (Taiwan)

低功率電波輻射性電機管理辦法

第十二條 經型式認證合格之低功率射頻電機，非經許可，公司、商號或使用者均不得擅自變更頻率、加大功率或變更原設計之特性及功能。

第十四條 低功率射頻電機之使用不得影響飛航安全及干擾合法通信；經發現有干擾現象時，應立即停用，並改善至無干擾時方得繼續使用。前項合法通信，指依電信法規定作業之無線電通信。低功率射頻電機須忍受合法通信或工業、科學及醫療用電波輻射性電機設備之干擾。

電磁波曝露量 MPE 標準值 1mW/cm², 本產品使用時建議應距離人體 58 cm。

TELEC Statement (Japan)

5.2/5.3GHz帯の無線LAN製品は法令により屋外では使用できません。
屋内のみでご使用ください。

All wireless LAN products in the 5.2/5.3GHz band cannot be used outdoors. Use the product only indoors.

Warnings and Cautionary Messages

Warning: This product does not contain any serviceable user parts.

Warning: Installation and removal of the unit must be carried out by qualified personnel only.

Warning: When connecting this device to a power outlet, connect the field ground lead on the tri-pole power plug to a valid earth ground line to prevent electrical hazards.

Caution: Wear an anti-static wrist strap or take other suitable measures to prevent electrostatic discharge when handling this equipment.

Caution: Do not plug a phone jack connector in the RJ-45 port. This may damage this device.

Caution: Use only twisted-pair cables with RJ-45 connectors that conform to FCC standards.

Hardware Specifications

Chassis	
Size (L x W x H:)	ML2.5-60-35: 350 x 350 x 200 mm (13.78 x 13.78 x 7.87 in.) ML2.5-60-19: 190 x 190 x 120 mm (7.48 x 7.48 x 4.72 in.) ML2.5-60-BF-18: 190 x 190 x 60 mm (7.48 x 7.48 x 2.36 in.)
Weight	ML2.5-60-35: 3.5 kg (7.72 lb) ML2.5-60-19: 2 kg (4.41 lb) ML2.5-60-BF-18: 2 kg (4.41 lb) with mount
Temperature	Operating: -30 °C to 55 °C (-22 °F to 131 °F) / ML2.5-60-BF-18: -40 °C to 70 °C (-40 °F to 158 °F)
	Storage: -40 °C to 70 °C (-40 °F to 158 °F)
Humidity	Operating: 10% to 90% (non-condensing)
Network Interfaces	
Ports	**ETH** RJ-45 Port: 1000BASE-T, passive PoE **SFP** Port: 1000BASE-X
60 GHz Radio	IEEE 802.11ad
5 GHz Radio	IEEE 802.11ac
Radio Frequencies	5150 ~ 5250 MHz (FCC) 5725 ~ 5850 MHz (FCC) 5745 ~ 5825 MHz (China) 5180 ~ 5320 MHz (ETSI) 5500 ~ 5700 MHz (ETSI) 58.32 ~ 64.80 GHz
Power Supply	
Passive PoE	48 VDC, maximum 0.5 A
Power Consumption	24 W maximum
Regulatory Compliances	
Radio	EN 300 328 V1.8.1:2012 EN 301 893 V1.7.1:2012 EN 301 489-1 V1.9.2 (2011-09) EN 301 489-17 V2.2.1:2012 FCC Part 15C 15.247/15.207 (2.4-2.4835GHz) FCC Part 15E 15.407 (5.150GHz-5.250GHz, 5.725-5.850GHz)
Emissions	EN 55022 2010+AC:2011 EN 61000-3-2 2006+A1:2009+A2:2009 FCC Class B Part 15
Immunity	EN 55024 : 2010 EN 61000-4-2 : 2009

IgniteNet Inc.
20 Mason, Irvine, CA, 92618 USA

This antenna is normally mounted on a mast and is vertically polarized.
Warning:
Please carefully select the installation position and make sure that the final output power does not exceed the limit set force in relevant rules. The violation of the rule could lead to serious federal penalty.
The maximum e.i.r.p. at any elevation angle above 30 degrees as measured from the horizon must not exceed 125 mW (21 dBm).
The antenna must be installed completely perpendicular to the horizon.