FCC Radio Test Report

Equipment	: Metrolinq 60GHz Module
Brand Name	: IgniteNet
Model No.	: RDO-60-FB-USBB-18BF
FCC ID	: HEDML60PRS4601
Standard	: 47 CFR FCC Part 15.255
Applicant	: Accton Technology Corporation No. 1, Creation Rd. III, Science-based Industrial Park Hsin Chu 30077, Taiwan R.O.C.
Manufacturer (1)	: Joy Technology (Shen Zhen) Co. Ltd HengKeng Ind., Shangpai, Shangwu, Aiqun Rd., Shiyan Town, Shenzhen 518108 China
Manufacturer (2)	: Accton Technology Corporation No. 1, Creation Rd. III, Science-based Industrial Park Hsin Chu 30077, Taiwan R.O.C.

The product sample received on Sep. 20, 2017 and completely tested on Oct. 02, 2017. We, SPORTON, would like to declare that the tested sample has been evaluated in accordance with the procedures given in ANSI C63.10-2013, 47 CFR FCC Part 15.255 and Millimeter Wave Test Procedures and shown compliance with the applicable technical standards.

The test results in this report apply exclusively to the tested model / sample. Without written approval of SPORTON INTERNATIONAL INC., the test report shall not be reproduced except in full.

Sam Chen
SPORTON INTERNATIONAL INC.

Testing Laboratory
1190

Table of Contents

1 GENERAL DESCRIPTION 5

1.1 Information 5
1.2 Accessories 7
1.3 Support Equipment 7
1.4 EUT Operation during Test 7
1.5 Test Setup Diagram 8
1.6 Testing Applied Standards 11
1.7 Testing Location 11

2 TEST CONFIGURATION OF EQUIPMENT UNDER TEST 12

2.1 Test Channel Frequencies 12
2.2 Conformance Tests and Related Test Frequencies 12
2.3 Far Field Boundary Calculations 13

3 TRANSMITTER TEST RESULT 14

3.1 AC Power Conducted Emissions 14
3.2 Occupied Bandwidth 18
3.3 EIRP Power 24
3.4 Peak Conducted Power 27
3.5 Transmitter Spurious Emissions 29
3.6 Frequency Stability 44
3.7 Operation Restriction and Group Installation 47

4 TEST EQUIPMENT AND CALIBRATION DATA 48

5 MEASUREMENT UNCERTAINTY 50

APPENDIX A. TEST PHOTOS ..... A1 ~ A8

PHOTOGRAPHS OF EUT V01

Summary of Test Result

Standard Requirements and Conformance Test Specifications				
Report Clause	**Ref. Std. Clause**	**Description**	**Result**	**Remark**
3.1	FCC 15.207	AC Power Conducted Emissions	Complied	-
3.2	FCC 15.255(d)	Occupied Bandwidth	Complied	-
3.3	FCC 15.255(b)(1)	EIRP Power	Complied	-
3.4	FCC 15.255(d)	Peak Conducted Power	Complied	-
3.5	FCC 15.255(c)	Transmitter Spurious Emissions	Complied	-
3.6	FCC 15.255(e)	Frequency Stability	Complied	-
3.7	FCC 15.255(a),(g)	Operation Restriction and Group Installation	Complied	-

Revision History

REPORT NO.	VERSION	DESCRIPTION	ISSUED DATE
FR791405	Rev. 01	Initial issue of report	Oct. 20, 2017

1 General Description

1.1 Information

1.1.1 The Channel Plan(s)

Frequency Range	57-71GHz
The Channel Plan(s)	Channel 1: 58.32 GHz Channel 2: 60.48 GHz Channel 3: 62.64 GHz Channel 4: 64.80 GHz

1.1.2 Table of Modulation

MCS index	Modulation	N_{CBPS}	Repetition	Code rate	Data rate (Mbps)
1	π/2-BPSK	1	2	1/2	385
2	π/2-BPSK	1	1	1/2	770
3	π/2-BPSK	1	1	5/8	962.5
4	π/2-BPSK	1	1	3/4	1155
5	π/2-BPSK	1	1	13/16	1251.25
6	π/2-QPSK	2	1	1/2	1540
7	π/2-QPSK	2	1	5/8	1925
8	π/2-QPSK	2	1	3/4	2310
9	π/2-QPSK	2	1	13/16	2502.5
10	π/2-16QAM	4	1	1/2	3080
11	π/2-16QAM	4	1	5/8	3850
12	π/2-16QAM	4	1	3/4	4620

1.1.3 Antenna Information

Ant.	Brand	Model Name	Antenna Type	Connector	Gain (dBi)
1	Accton	120300000225X	Chip Ant.	N/A	17.2

1.1.4 Equipment Use Condition

Equipment Use Condition
☐ Fixed field disturbance sensors at 61-61.5GHz
☐ Except fixed field disturbance sensors at 61-61.5GHz
☒ Except fixed field disturbance sensors

1.1.5 User Condition

Intended Operation
☐ Indoor
☒ Outdoor

1.1.6 Duty Cycle

Duty Cycle			Duty Cycle Factor
The transmitter is intended for	**Channel 1**	100%	0.00
	Channel 2	100%	0.00
	Channel 3	100%	0.00
	Channel 4	100%	0.00

1.2 Accessories

Accessories	
No.	**Equipment Name / Description**
1	USN cable*1: Shielded, 0.7m

1.3 Support Equipment

For AC Power Conducted Emissions and Transmitter Spurious Emissions (below 1 GHz) test:

Support Equipment				
No.	**Equipment**	**Brand Name**	**Model Name**	**FCC ID**
1	NB	ACER	TravelMate P645	DoC
2	NB	ACER	TravelMate P645	DoC
3	Metrolinq 60GHz Module (Device)	IgniteNet	RDO-60-FB-USBB-18BF	HEDML60PRS4601

For other tests:

Support Equipment				
No.	**Equipment**	**Brand Name**	**Model Name**	**FCC ID**
1	NB	ACER	TravelMate P645	DoC

1.4 EUT Operation during Test

For CTX:

During the test, executed the test program to control the EUT continuously transmit RF signal.

For Normal Link:

During the test, the EUT operation to normal function.

1.5 Test Setup Diagram

Test Setup Diagram - AC Power Conducted Emissions

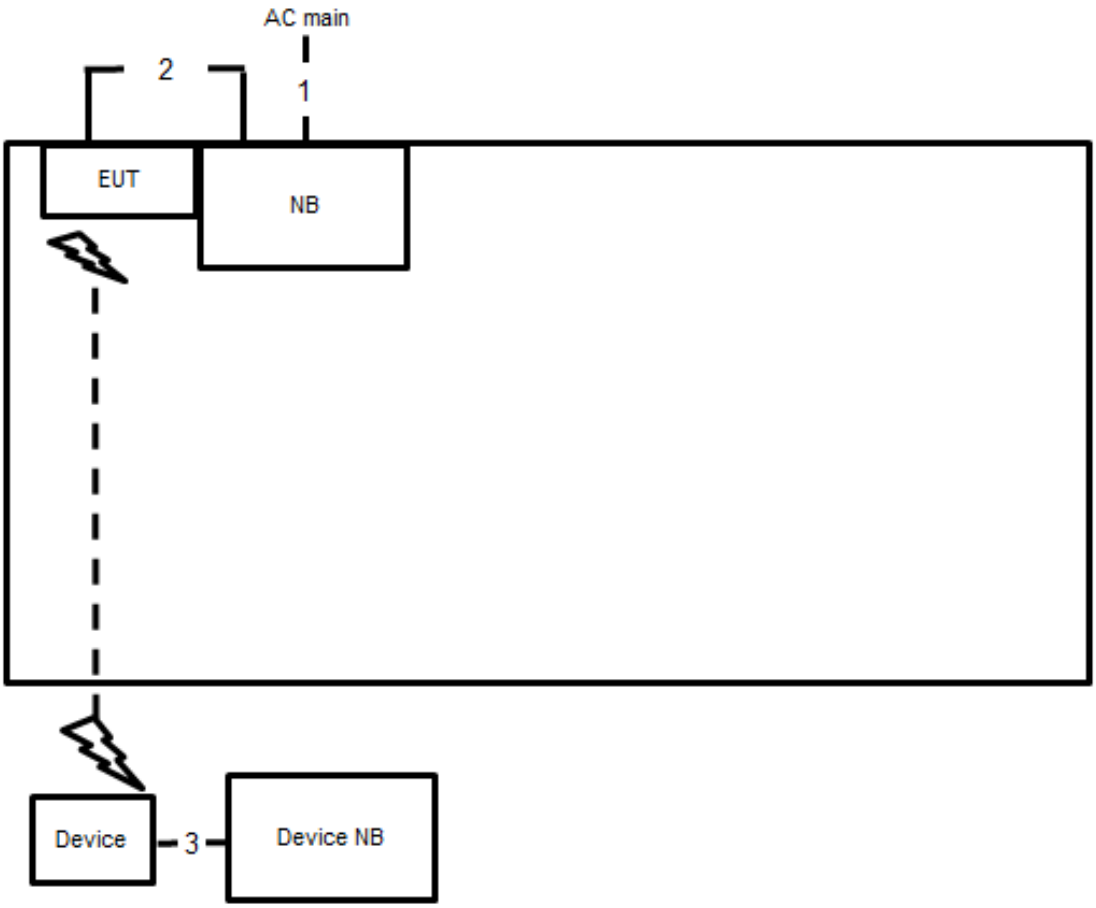

Item	Connection	Shielded	Length
1	Power cable	No	3.6m
2	USN cable	Yes	0.7m
3	USN cable	Yes	0.7m

Test Setup Diagram - Transmitter Spurious Emissions below 1 GHz

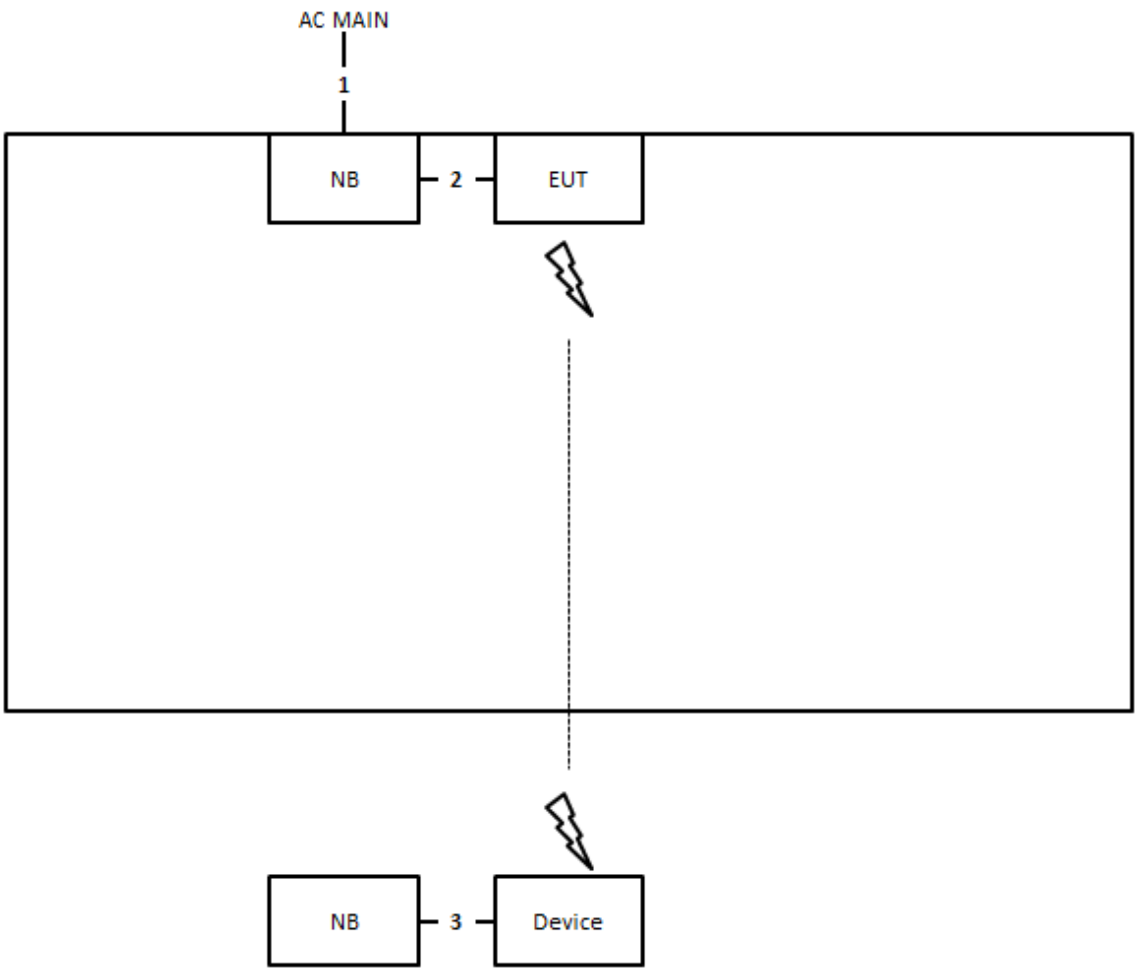

Item	Connection	Shielded	Length
1	Power cable	No	3.6m
2	USN cable	Yes	0.7m
3	USN cable	Yes	0.7m

Test Setup Diagram - Transmitter Spurious Emissions above 1 GHz

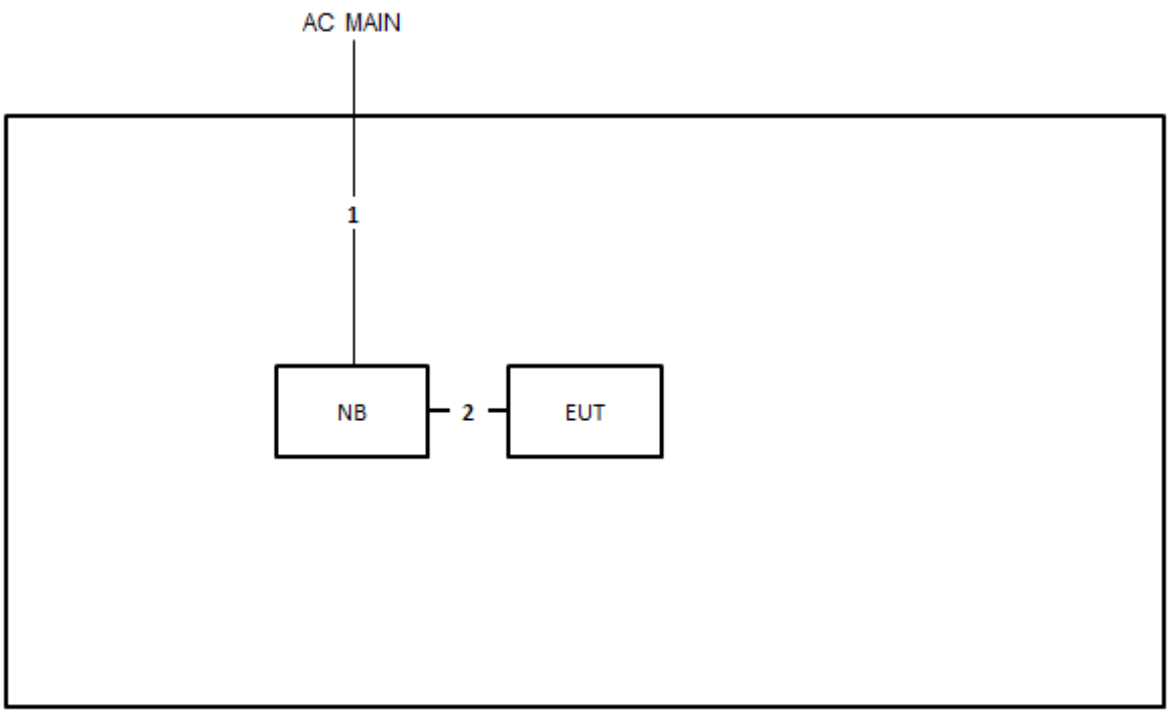

Item	Connection	Shielded	Length
1	Power cable	No	3.6m
2	USN cable	Yes	0.7m

1.6 Testing Applied Standards

According to the specifications of the manufacturer, the EUT must comply with the requirements of the following standards:

- 47 CFR FCC Part 15.255
- ANSI C63.10-2013 Section 9. “Procedures for testing millimeter-wave systems”

1.7 Testing Location

Testing Location							
☐	HWA YA	ADD : No. 52, Hwa Ya 1st Rd., Kwei-Shan Hsiang, Tao Yuan Hsien, Taiwan, R.O.C.					
		TEL : 886-3-327-3456		FAX : 886-3-327-0973			
☒	JHUBEI	ADD : No.8, Lane 724, Bo-ai St., Jhubei City, HsinChu County 302, Taiwan, R.O.C.					
		TEL : 886-3-656-9065		FAX : 886-3-656-9085			
Test Site No.							
CO01-CB			03CH01-CB			TH01-CB	

Test site Designation No. TW0006 with FCC.

Test site registered number IC 4086D with Industry Canada.

2 Test Configuration of Equipment under Test

2.1 Test Channel Frequencies

Test Channel Frequencies Configuration	
Channel 1 (GHz)	58.32
Channel 2 (GHz)	60.48
Channel 3 (GHz)	62.64
Channel 4 (GHz)	64.80

2.2 Conformance Tests and Related Test Frequencies

Test Item	Test Frequencies (GHz)
AC Power Conducted Emissions	Normal Link
Occupied Bandwidth	58.32, 60.48, 62.64, 64.80
EIRP Power	58.32, 60.48, 62.64, 64.80
Peak Conducted Power	58.32, 60.48, 62.64, 64.80
Transmitter Spurious Emissions (below 1 GHz)	Normal Link
Transmitter Spurious Emissions (1 GHz-40 GHz)	58.32, 60.48, 62.64, 64.80
Transmitter Spurious Emissions (above 40 GHz)	58.32, 60.48, 62.64, 64.80
Frequency Stability	Un-Modulation

The following test modes were performed for all tests:

For Transmitter Spurious Emissions (below 1 GHz) test:

Mode 1. EUT in X axis

Mode 2. EUT in Y axis

Mode 3. EUT in Z axis

Mode 3 is the worst case, so it was selected to record in this test report.

For Transmitter Spurious Emissions (above 1 GHz) test:

The EUT was performed at X axis, Y axis and Z axis position for Transmitter Spurious Emissions (above 1 GHz) test, and the worst case was found at Y axis. So the measurement will follow this same test configuration.

2.3 Far Field Boundary Calculations

The far-field boundary is given as:

far field = (2 * L^2) / λ

where:

L = Largest Antenna Dimension, including the reflector, in meters

λ = wavelength in meters

Far Field (m)				
Frequency (GHz)	**L (m)**	**Lambda (m)**	**d(Far Field) (m)**	**d(Far Field) (cm)**
58.32	0.03	0.0051440	0.350	34.99
60.48	0.03	0.0049603	0.363	36.29
62.64	0.03	0.0047893	0.376	37.58
64.80	0.03	0.0046296	0.389	38.88

3 Transmitter Test Result

3.1 AC Power Conducted Emissions

3.1.1 Limit of AC Power Conducted Emissions

AC Power Conducted Emissions Limit		
Frequency Emission (MHz)	**Quasi-Peak**	**Average**
0.15-0.5	66 - 56 *	56 - 46 *
0.5-5	56	46
5-30	60	50
Note: * Decreases with the logarithm of the frequency.		

3.1.2 Measuring Instruments

Refer a measuring instruments list in this test report.

3.1.3 Test Procedures

Method of measurement: Refer as ANSI C63.10-2013, clause 6.2.

3.1.4 Test Setup

AC Power Conducted Emissions

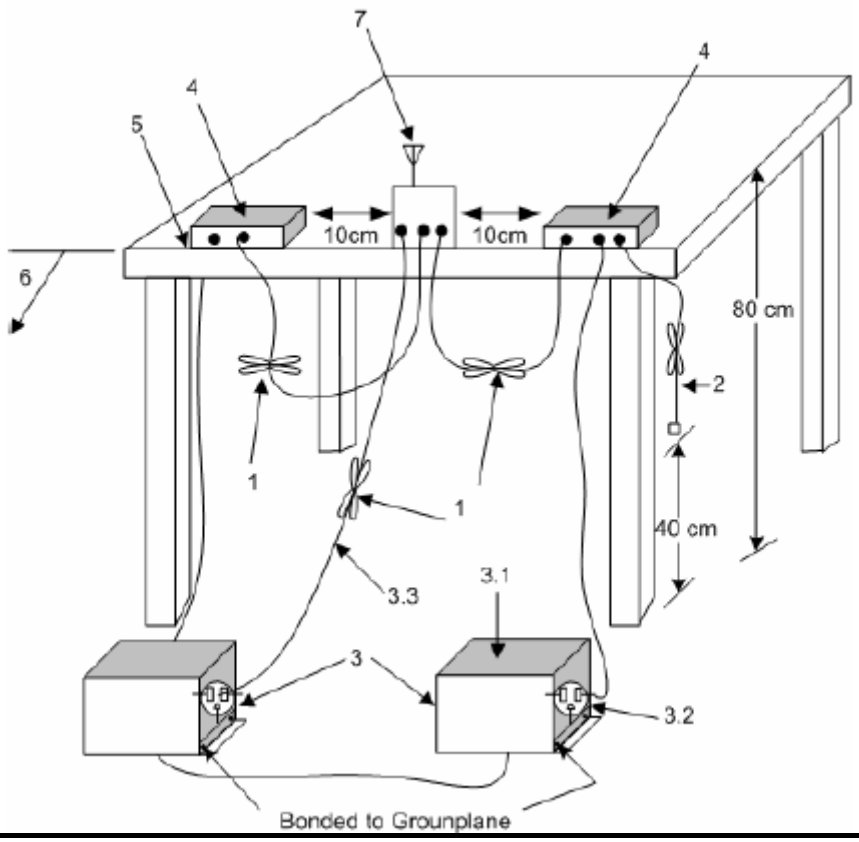

AC Power Conducted Emissions
1. Interconnecting cables that hang closer than 40 cm to the ground plane shall be folded back and forth in the center forming a bundle 30 cm to 40 cm long (see ANSI C63.10, clause 6.2.3.2).
2. I/O cables that are not connected to an accessory shall be bundled in the center. The end of the cable may be terminated, if required, using the correct terminating impedance. The overall length shall not exceed 1 m (see ANSI C63.10, clause 6.2.2).
3. EUT connected to one LISN. Unused LISN measuring port connectors shall be terminated in 50 ohm loads. LISN can be placed on top of, or immediately beneath, reference ground plane (see ANSI C63.10, clauses 6.2.2 and 6.2.3). 3.1. All other equipment powered from additional LISN(s). 3.2. A multiple-outlet strip can be used for multiple power cords of non-EUT equipment. 3.3. LISN at least 80 cm from nearest part of EUT chassis.
4. Non-EUT components of EUT system being tested.
5. Rear of EUT, including peripherals, shall all be aligned and flush with edge of tabletop (see ANSI C63.10, clause 6.2.3.2).
6. Edge of tabletop shall be 40 cm removed from a vertical conducting plane that is bonded to the ground plane (see ANSI C63.10, clause 6.2.2 for options).
7. Antenna may be integral or detachable. If detachable, the antenna shall be attached for this test.

3.1.5 Test Result of AC Power Conducted Emissions

Test Conditions	see ANSI C63.10, clause 5.11
Test Setup	see ANSI C63.10, clause 6.2.3

NOTE 1: If equipment having different channel plan and nominal channel bandwidth modes (see test report clause 1.1.1), the measurements are uninfluenced by different channel plan and nominal channel bandwidth modes, may not need to be repeated for all modes. If equipment having different transmit operating modes (see test report clause 1.1.2), the measurements are uninfluenced by different transmit operating modes, may not need to be repeated for all the operating modes. Similar, if the equipment supports different modulations and/or data rates, the measurements described in ANSI C63.10, clause 5.12 may not need to be repeated for all these modulations and data rates. Simple comparison of engineering test across all operating modes, modulations and data rates may need to be performed to define the worse case combination to be used for the conformance testing.

NOTE 2: “>20dB” means the tables in this clause should only list values of spurious emissions that exceed the level of 20 dB below the applicable limit, see ANSI C63.4, clause 10.1.8.1.

Temp	25°C	**Humidity**	60%
Test Engineer	Tony Chang	**Phase**	Line
Configuration	Normal Link		

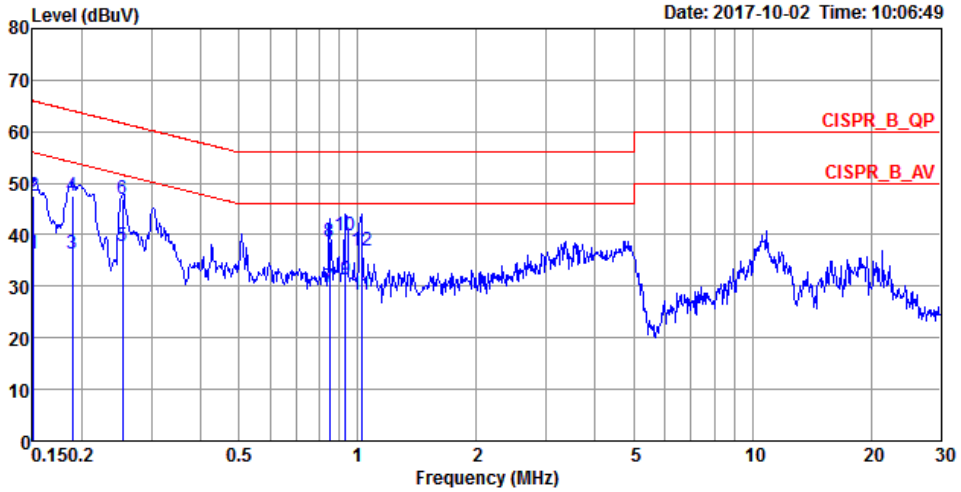

	Freq	Level	Over Limit	Limit Line	Read Level	LISN Factor	Cable Loss	Remark	Pol/Phase
	MHz	dBuV	dB	dBuV	dBuV	dB	dB		
1	0.1511	36.36	-19.58	55.94	26.20	10.00	0.16	Average	LINE
2	0.1511	47.56	-18.38	65.94	37.40	10.00	0.16	QP	LINE
3	0.1893	36.31	-17.76	54.07	26.27	9.91	0.13	Average	LINE
4	0.1893	47.52	-16.55	64.07	37.48	9.91	0.13	QP	LINE
5	0.2535	37.90	-13.74	51.64	27.89	9.92	0.09	Average	LINE
6	0.2535	46.89	-14.75	61.64	36.88	9.92	0.09	QP	LINE
7	0.8483	29.85	-16.15	46.00	19.73	9.96	0.16	Average	LINE
8	0.8483	38.71	-17.29	56.00	28.59	9.96	0.16	QP	LINE
9	0.9331	31.41	-14.59	46.00	21.27	9.96	0.18	Average	LINE
10	0.9331	39.76	-16.24	56.00	29.62	9.96	0.18	QP	LINE
11	1.0211	28.34	-17.66	46.00	18.19	9.96	0.19	Average	LINE
12	1.0211	37.00	-19.00	56.00	26.85	9.96	0.19	QP	LINE

Temp	25°C	**Humidity**	60%
Test Engineer	Tony Chang	**Phase**	Neutral
Configuration	Normal Link		

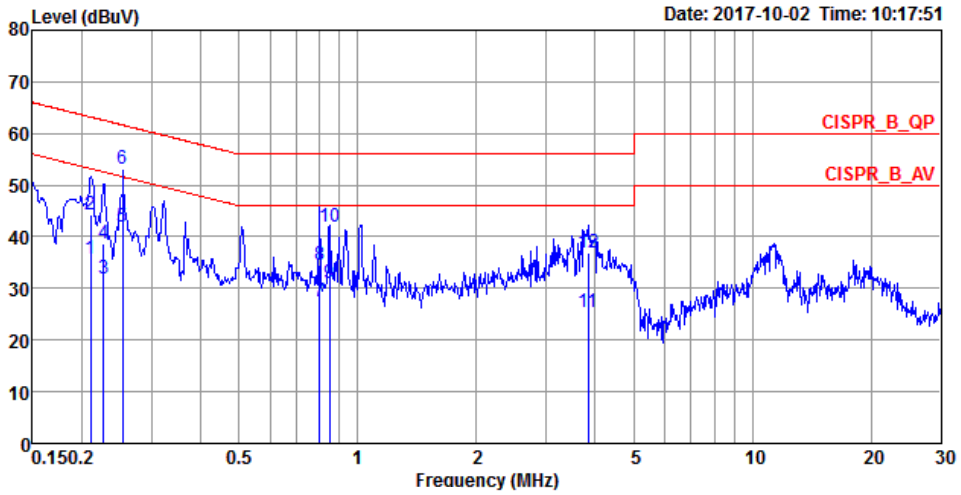

	Freq	Level	Over Limit	Limit Line	Read Level	LISN Factor	Cable Loss	Remark	Pol/Phase
	MHz	dBuV	dB	dBuV	dBuV	dB	dB		
1	0.2107	35.76	-17.42	53.18	25.59	10.05	0.12	Average	NEUTRAL
2	0.2107	44.24	-18.94	63.18	34.07	10.05	0.12	QP	NEUTRAL
3	0.2267	31.82	-20.75	52.57	21.66	10.05	0.11	Average	NEUTRAL
4	0.2267	38.60	-23.97	62.57	28.44	10.05	0.11	QP	NEUTRAL
5	0.2535	41.97	-9.67	51.64	31.80	10.08	0.09	Average	NEUTRAL
6	0.2535	53.07	-8.57	61.64	42.90	10.08	0.09	QP	NEUTRAL
7	0.8004	27.45	-18.55	46.00	17.18	10.12	0.15	Average	NEUTRAL
8	0.8004	34.55	-21.45	56.00	24.28	10.12	0.15	QP	NEUTRAL
9	0.8464	31.03	-14.97	46.00	20.77	10.10	0.16	Average	NEUTRAL
10	0.8464	41.89	-14.11	56.00	31.63	10.10	0.16	QP	NEUTRAL
11	3.8402	25.26	-20.74	46.00	15.19	9.96	0.11	Average	NEUTRAL
12	3.8402	37.04	-18.96	56.00	26.97	9.96	0.11	QP	NEUTRAL

3.2 Occupied Bandwidth

3.2.1 Limit of Occupied Bandwidth

6dBc Bandwidth (see Note 1)	None
26dBc Bandwidth	None
99% Occupied Bandwidth (see Note 2)	None

NOTE 1: The 6dBc bandwidth is the frequency bandwidth of the signal power at the -6 dBc points when measured with a 100 kHz resolution bandwidth. These measurements shall also be performed at normal test conditions.

NOTE 2: The 99% occupied bandwidth is the frequency bandwidth of the signal power at the 99% channel power of occupied bandwidth when resolution bandwidth should be approximately 1 % to 5 % of the occupied bandwidth (OBW). These measurements shall also be performed at normal test conditions.

3.2.2 Measuring Instruments

Refer a measuring instruments list in this test report.

3.2.3 Test Procedures

Method of measurement: Refer as ANSI C63.10-2013, clauses 6.9.2.

3.2.4 Test Setup

Occupied Channel Bandwidth

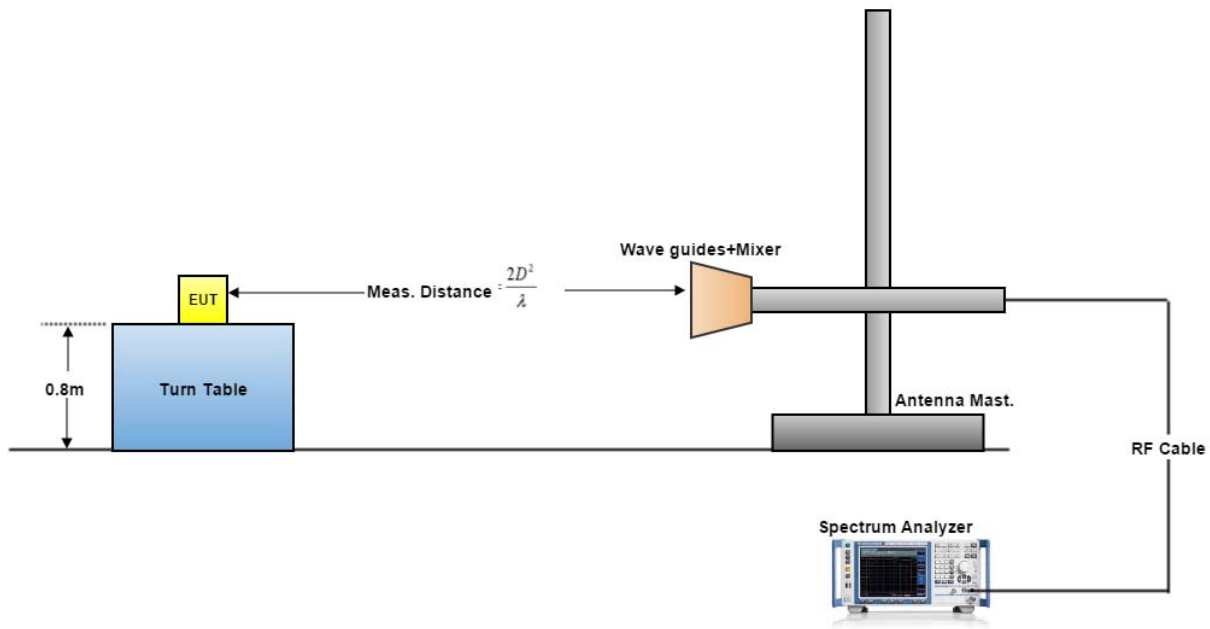

3.2.5 Test Result of Occupied Bandwidth

Test Conditions	see ANSI C63.10, clause 5.11
Test Setup	see ANSI C63.10, clause 6.9.2

NOTE: If equipment having different transmit operating modes (see test report clause 1.1.2), the measurements are uninfluenced by different transmit operating modes, may not need to be repeated for all the operating modes. Similar, if the equipment supports different modulations and/or data rates, the measurements described in ANSI C63.10, clause 5.11 may not need to be repeated for all these modulations and data rates. Simple comparison of engineering test across all operating modes, modulations and data rates may need to be performed to define the worse case combination to be used for the conformance testing. Refer as ANSI C63.10, clause 15, observe and record with plotted graphs or photographs the worst-case (i.e., widest) occupied bandwidth produced by these different modulation sources.

Temp	22℃	**Humidity**	54%
Test Engineer	Lucas Huang		

Test Results

Test Freq. (GHz)	6 dBc Bandwidth (MHz)	Occupied Bandwidth (MHz)	26 dBc Bandwidth (MHz)	Limit (MHz)
58.32	1295.20	2004.34	2250.40	N/A
60.48	853.80	1946.45	2149.10	N/A
62.64	1078.10	2026.04	2474.70	N/A
64.80	1110.60	2004.34	2004.34	N/A

3.2.5.1 Bandwidth Plots

Test Frequency: 58.32 GHz

6 dBc Bandwidth

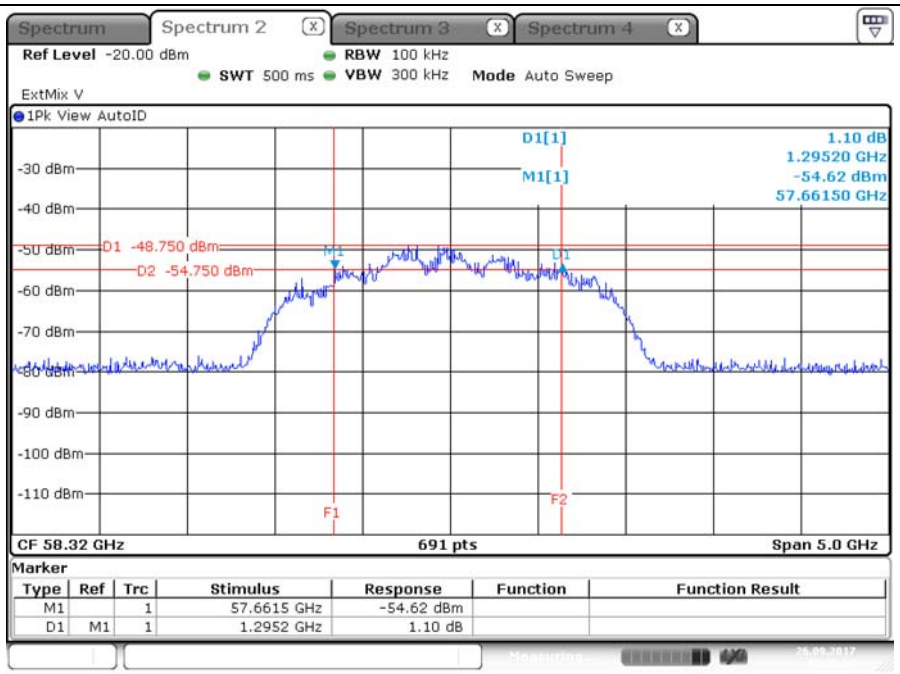

Occupied Bandwidth&26 dBc Bandwidth

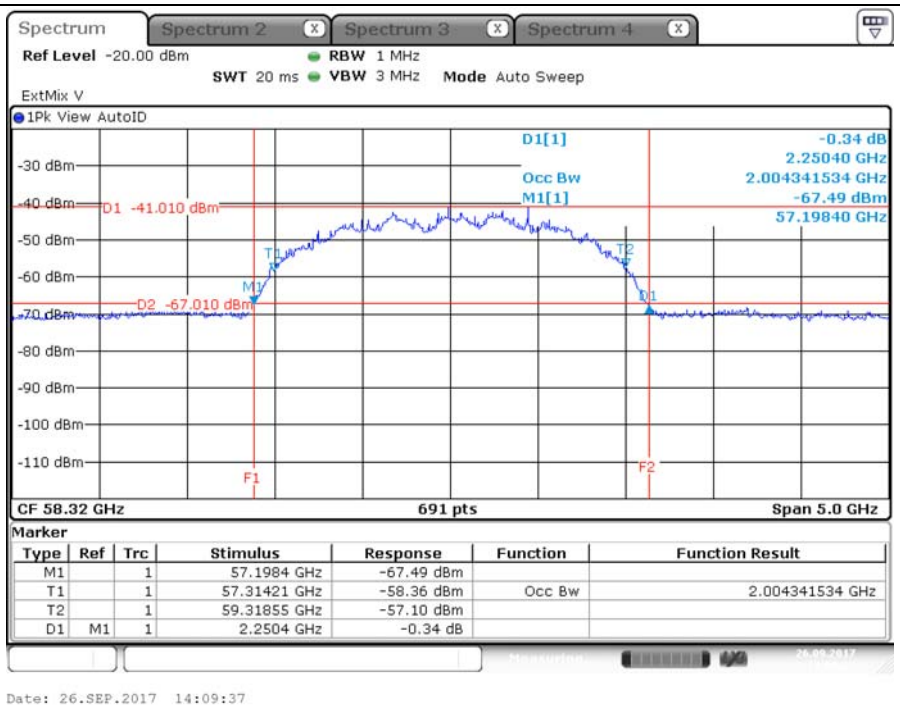

Test Frequency: 60.48 GHz

6 dBc Bandwidth

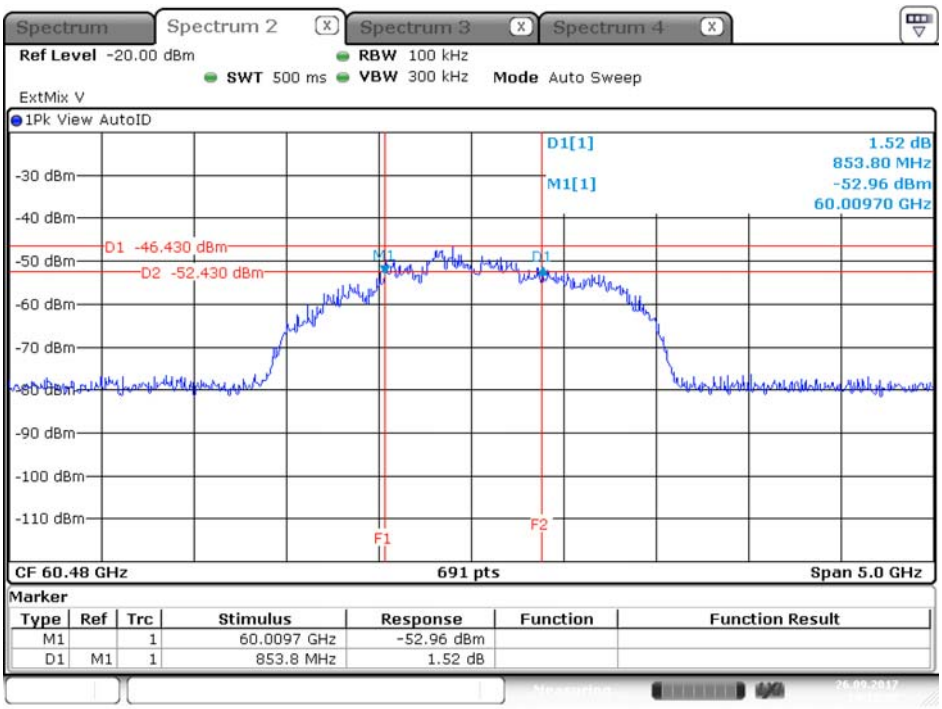

Occupied Bandwidth&26 dBc Bandwidth

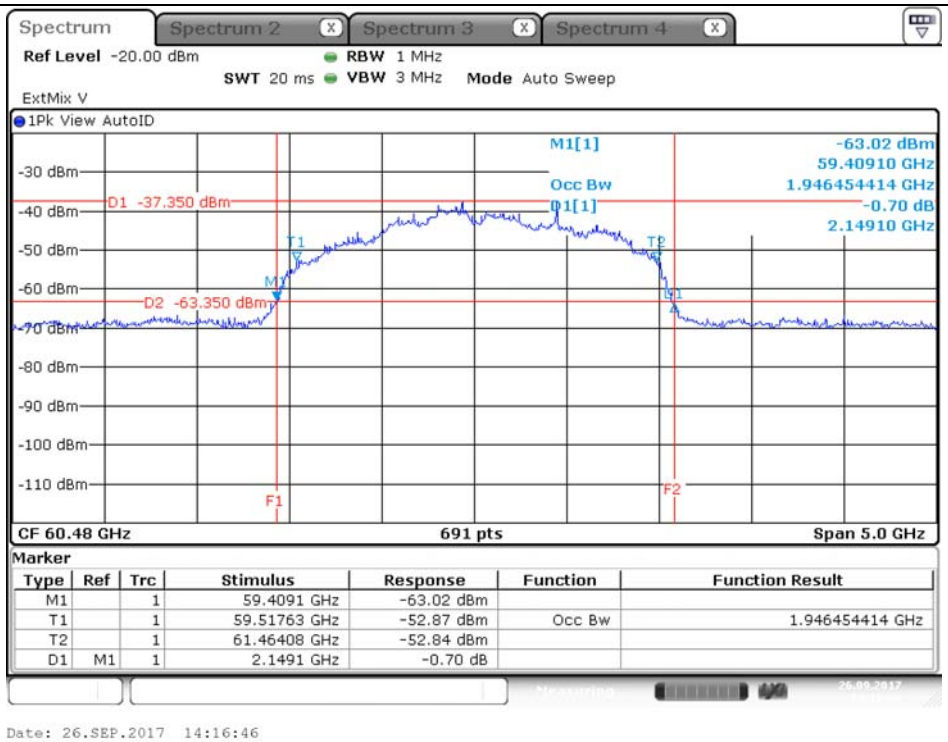

Test Frequency: 62.64 GHz

6 dBc Bandwidth

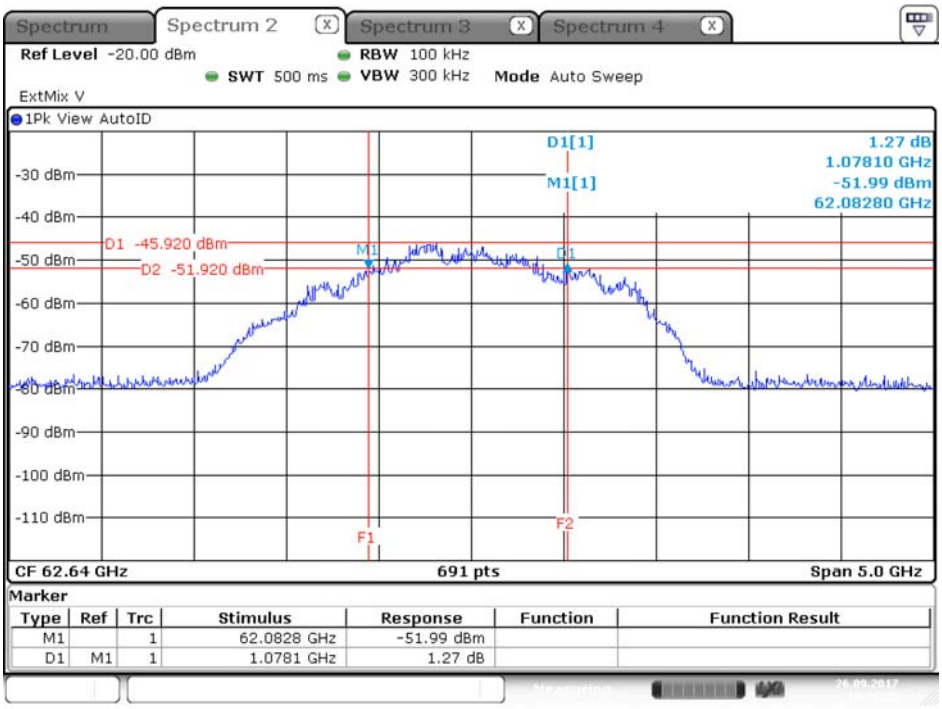

Date: 26.SEP.2017 14:21:53

Occupied Bandwidth&26 dBc Bandwidth

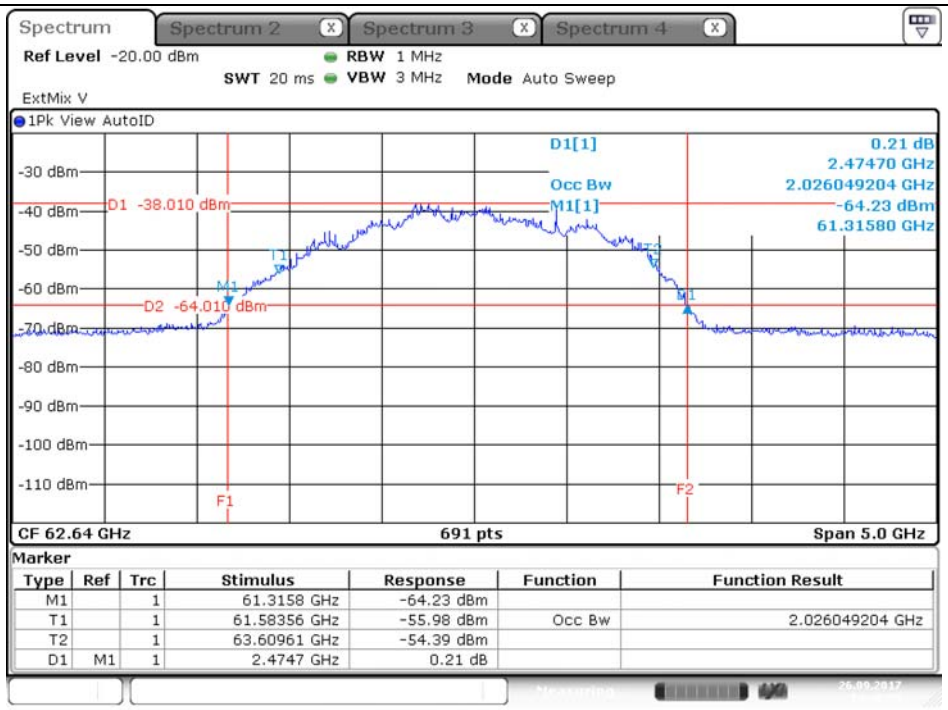

Date: 26.SEP.2017 14:48:25

Test Frequency: 64.80 GHz

6 dBc Bandwidth

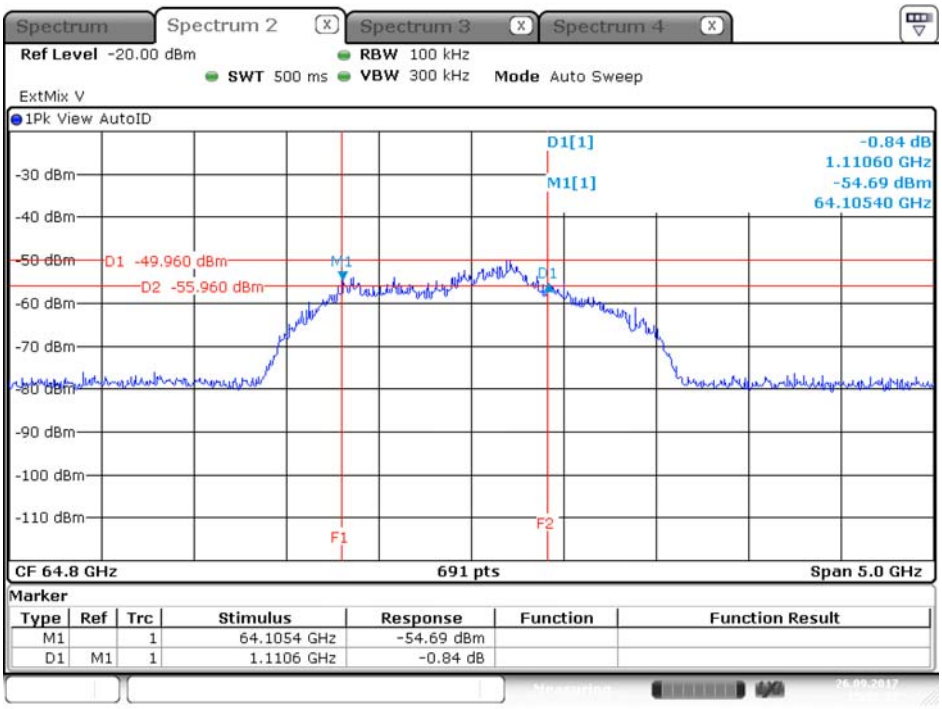

Date: 26.SEP.2017 15:07:37

Occupied Bandwidth&26 dBc Bandwidth

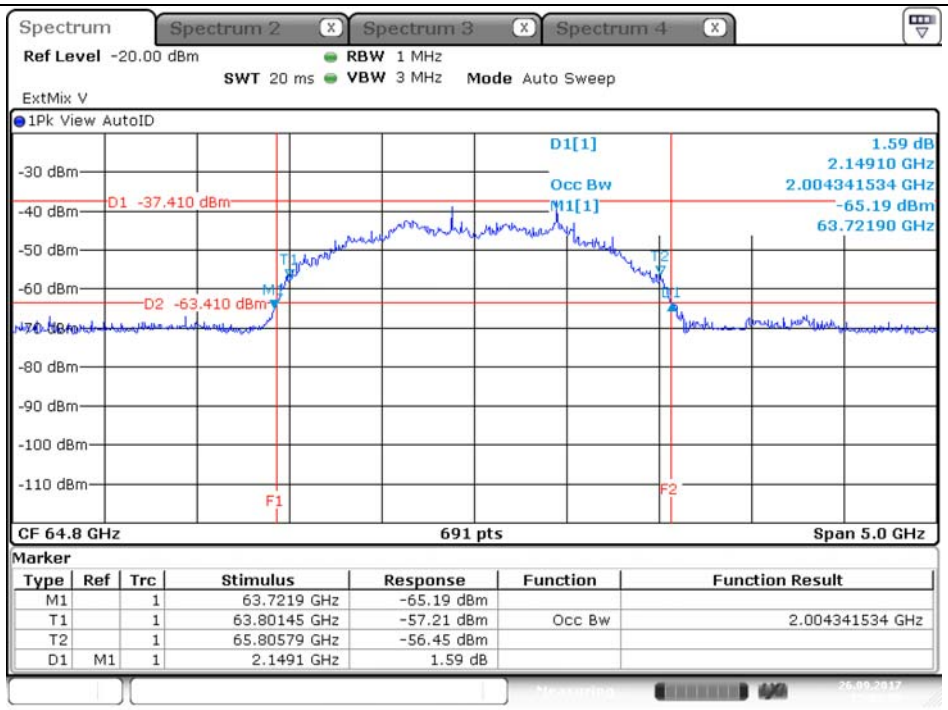

Date: 26.SEP.2017 15:05:57

3.3 EIRP Power

3.3.1 Limit of EIRP Power

EIRP Power Limit		
Use Condition	**EIRP Average Power**	**EIRP Peak Power**
Fixed field disturbance sensors at within the frequency band 61-61.5GHz	40 dBm	43 dBm
Fixed field disturbance sensors at outside of the band 61-61.5GHz	10 dBm	13 dBm
Except fixed field disturbance sensors at 61-61.5GHz	N/A	10 dBm
Except fixed field disturbance sensors(indoor)	40 dBm	43 dBm
Except fixed field disturbance sensors(outdoor)	82 dBm	85 dBm

NOTE: For the applicable limit, see FCC 15.255 (b)

3.3.2 Measuring Instruments

Refer a measuring instruments list in this test report.

3.3.3 Test Procedures

Method of measurement: Refer as ANSI C63.10-2013 clause 9.3 & 9.5.

3.3.4 Test Setup

EIPR Power

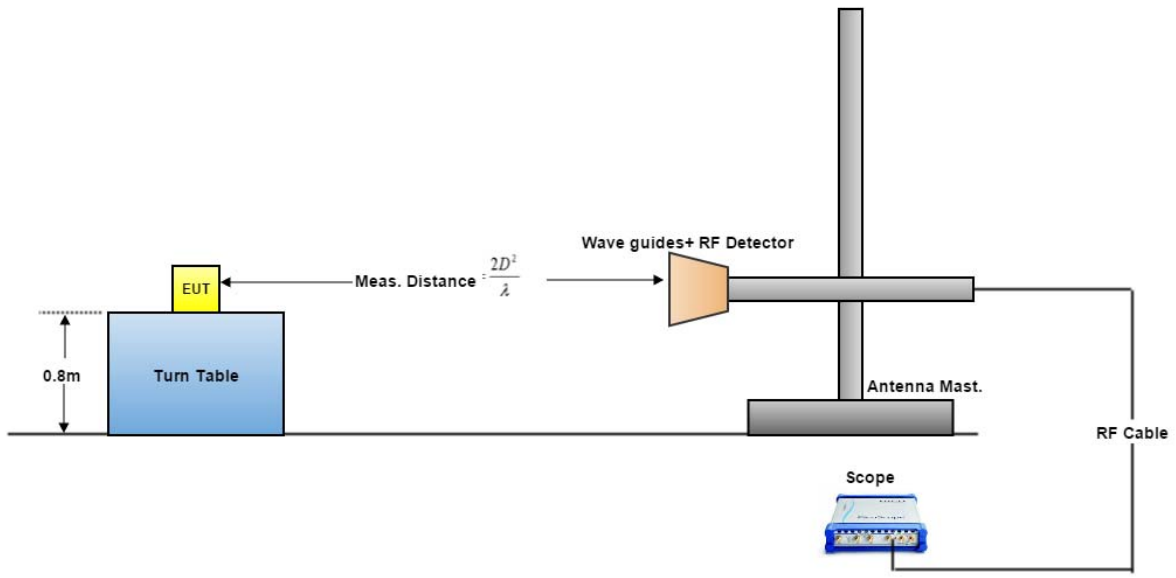

3.3.5 Test Result of EIRP Power

Test Conditions	see ANSI C63.10, clause 5.11 & clause 9
Test Setup	see ANSI C63.10, clause 9.11

NOTE: If the equipment supports different modulations and/or data rates, the measurements described in ANSI C63.10, clause 5.11 may not need to be repeated for all these modulations and data rates. Simple comparison of engineering test across all operating modes, modulations and data rates may need to be performed to define the worst case combination to be used for the conformance testing.

3.3.5.1 Test Result of EIRP Power

Temp	22℃	**Humidity**	54%
Test Engineer	Lucas Huang	**Test Distance**	1.0 m
Test Date	Sep. 26, 2017		

Test Results

Test Freq. (GHz)	**DSO (mV)**		**Power Measured (dBm)**		**E_{Meas} (dBuV/m)**		**EIRP (dBm)**		**EIRP Limit (dBm)** (note 1)	
	Peak	AV	Peak	AV	Peak	AV	Peak	AV	Peak	AV
58.32	210.16	47.12	-4.56	-14.11	145.01	135.46	40.21	30.66	85	82
60.48	192.66	43.69	-4.32	-14.23	145.57	135.66	40.77	30.86	85	82
62.64	222.12	41.29	-5.12	-14.69	145.07	135.50	40.27	30.70	85	82
64.80	183.96	39.56	-4.96	-14.83	145.53	135.66	40.73	30.86	85	82

The measured power level is converted to EIRP using the Friis equation:

For radiated emissions, calculate the field strength (E) in dBμV/meter.

$E = 126.8 – 20\log(\lambda) + P - G$

where:

E : is the field strength of the emission at the measurement distance, in dBμV/m

P : is the power measured at the output of the test antenna, in dBm

λ : is the wavelength of the emission under investigation [300/fMHz], in m

G : is the gain of the test antenna, in dBi For radiated emissions, calculate the EIRP (dBm). If the measurement was performed in the far field, calculate the EIRP.

EIRP = E-meas +20log(d-meas)-104.7

where:

EIRP : is the equivalent isotopically radiated power, in dBm

E-meas. : is the field strength of the emission at the measurement distance, in dBμV/m

d-meas. : is the measurement distance, in m

NOTE 1: For the applicable limit, see FCC 15.255 (b)

NOTE 2: The comparison method which replaces EUT with a signal generator is used to find the correct conversion factor between “DSO(mV)” & “Power Measured(dBm)”.

3.4 Peak Conducted Power

3.4.1 Limit of Peak Conducted Power

Peak Conducted Power Limit	
6dBc Bandwidth	**Peak Conducted Power (note 1)**
> 100MHz	500mW
≤ 100MHz	500mW x (BW/100) (see note 2)
NOTE 1: For the applicable limit, see FCC 15.255(d) NOTE 2: BW= 6dB bandwidth (measured at RBW 100kHz)	

3.4.2 Measuring Instruments

Refer a measuring instruments list in this test report.

3.4.3 Test Procedures

Method of measurement: Refer as ANSI C63.10-2013, clause 9.5

3.4.4 Test Result of Peak Conducted Power

Test Conditions	see ANSI C63.10, clause 5.11 & clause 9
Test Setup	see ANSI C63.10, clause 9.11
NOTE: If the equipment supports different modulations and/or data rates, the measurements described in ANSI C63.10, clause 5.11 may not need to be repeated for all these modulations and data rates. Simple comparison of engineering test across all operating modes, modulations and data rates may need to be performed to define the worst case combination to be used for the conformance testing.	

3.4.4.1 Peak Conducted Power

Temp	22℃	**Humidity**	54%
Test Engineer	Lucas Huang		
Test Date	Sep. 26, 2017		

Test Results

Test Freq. (GHz)	**EIRP (dBm)**	**Max. Ant. Gain**	**Peak Power (dBm)** (note1)	**Peak Power (mW)**	**6dBc BW (MHz)** (note2)	**Peak Power Limit (mW)** (note3)
58.32	40.21	17.20	23.01	200.167	1295.20	500.00
60.48	40.77	17.20	23.57	227.500	853.80	500.00
62.64	40.27	17.20	23.07	202.984	1078.10	500.00
64.80	40.73	17.20	23.53	225.376	1110.60	500.00

NOTE 1: Because EUT used for the integral antenna without temporary RF connector provided. Therefore peak conducted power is equal to EIRP power subtract the antenna gain.

NOTE 2: For the 6dBc bandwidth, see test report clause 3.2.5.

NOTE 3: For the applicable limit, see FCC 15.255(d)

NOTE 4: For radiated emission measurements, calculate conducted transmitter output power P(cond)(dBm)

P(cond) = EIRP - G(dBi)

where:

G(dBi) is gain of EUT antenna.

3.5 Transmitter Spurious Emissions

3.5.1 Limit of Transmitter Spurious Emissions

Frequency Range	Limit
Radiated emissions below 40 GHz	FCC 15.209
Radiated emissions above 40 GHz – 200GHz	90 pW/cm^2 @ 3 m (Equivalent EIRP 102 μW, -9.91dBm)
NOTE 1: For the applicable limit, see FCC 15.255(c) NOTE 2: Spurious emissions shall not exceed the level of the fundamental emission.	

3.5.2 Test Procedures

Method of measurement: Refer as ANSI C63.10-2013, clause 9.12

3.5.3 Test Setup

Transmitter Spurious Emissions

9kHz ~30MHz

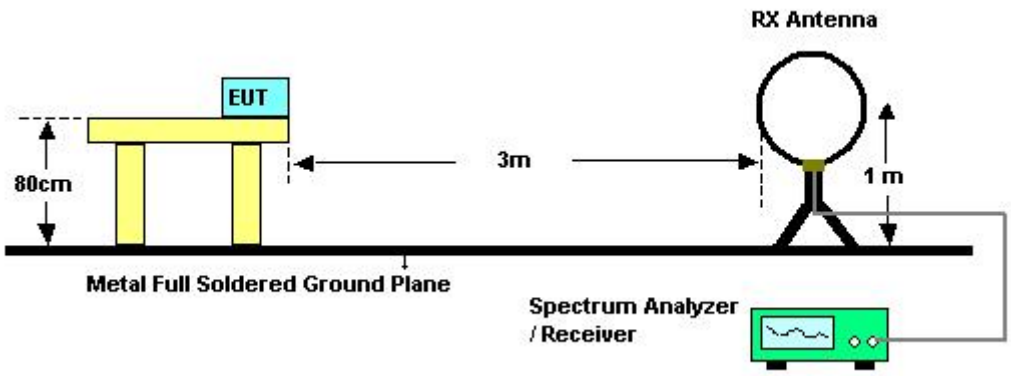

30MHz~1GHz

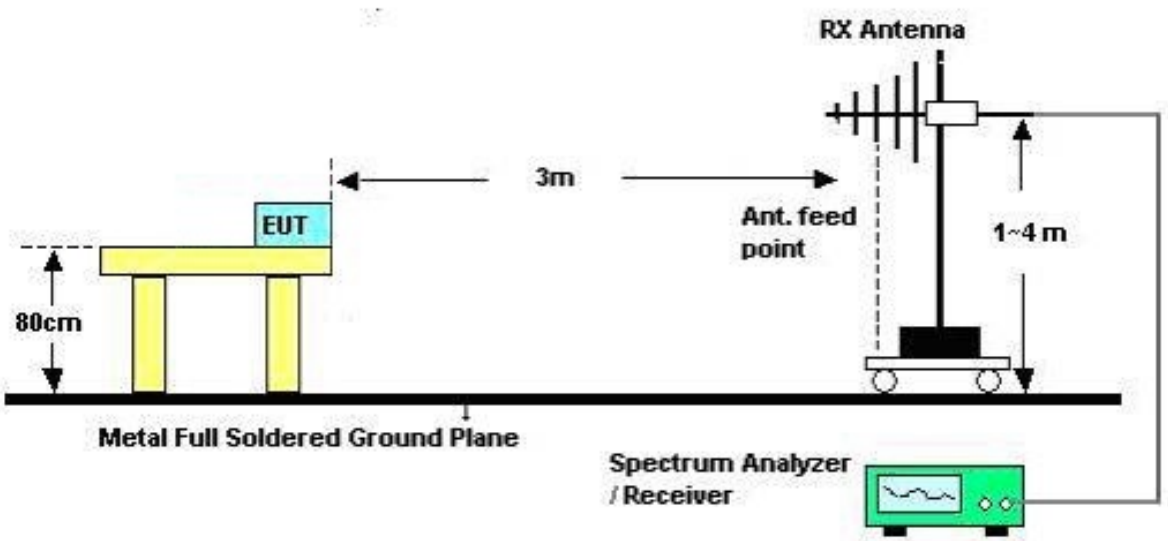

1GHz ~40GHz

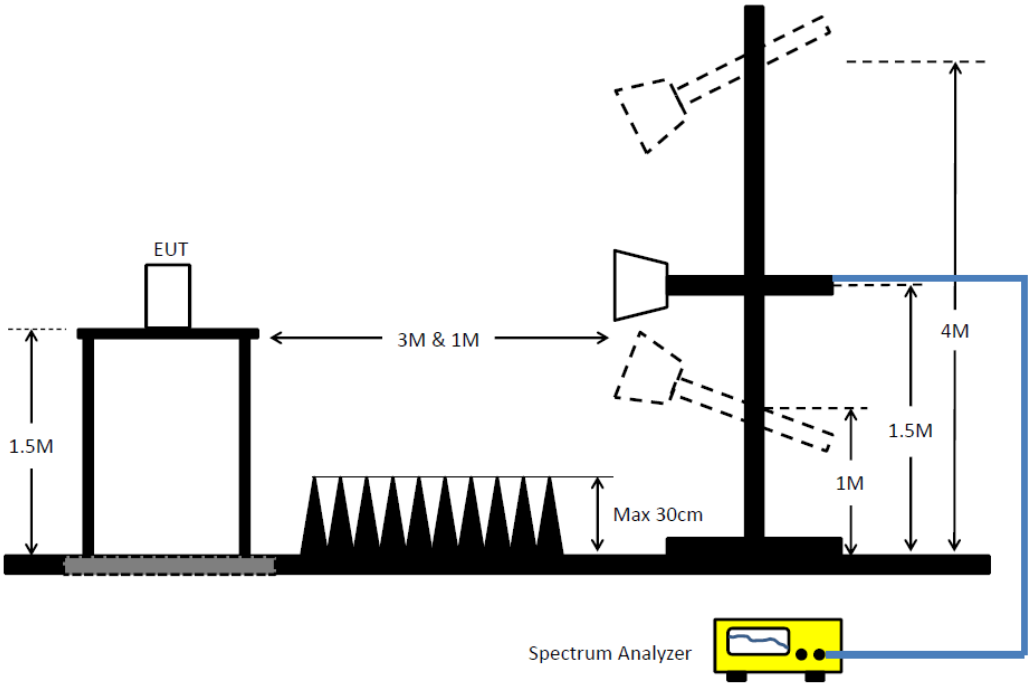

Above 40GHz

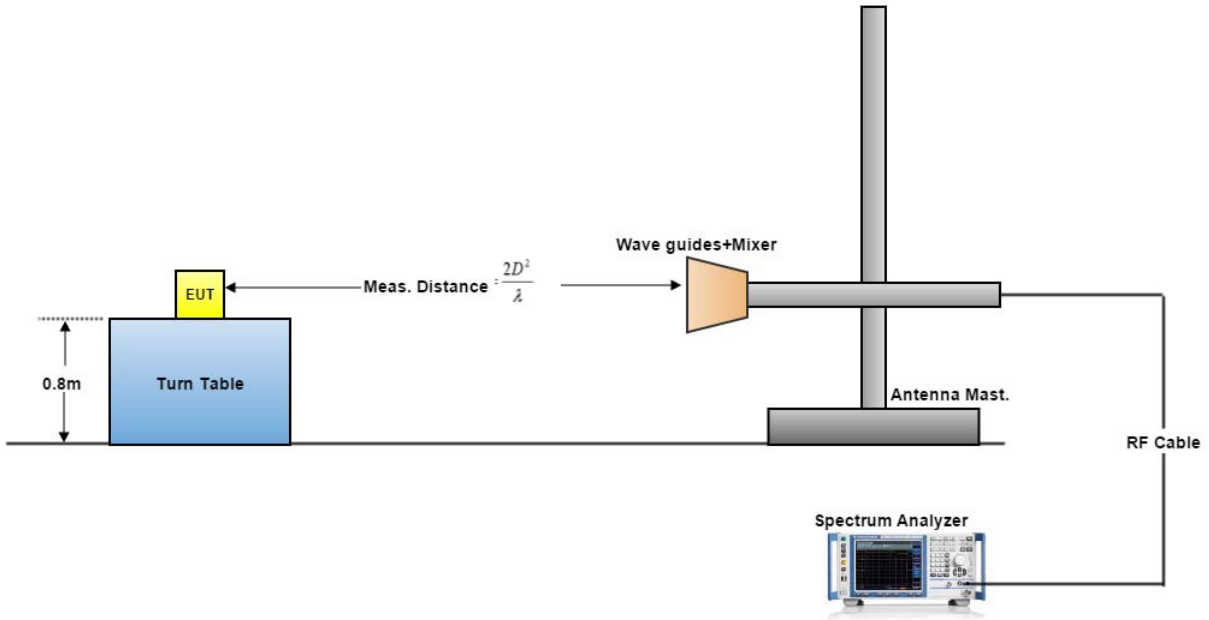

A measuring distance of at 3 m shall be used for measurements at frequencies up to 15 GHz. For frequencies above 15 GHz, any suitable measuring distance may be used. The measurement distance is chosen up to far field distance, depending on the test system noise floor for detecting spurious emission signals. Then above 15 GHz shall be extrapolated to the specified distance using an extrapolation factor of 20 dB/decade from spec. distance (3 m) to measurement distance. Distance extrapolation factor = 20 log (spec. distance [3 m] / measurement distance [N m]) (dB) .The measurements described in ANSI C63.10, clause 7.8.6. If the emission cannot be detected at 1 m, reduce the RBW to increase system sensitivity. Note the value. If the emission still cannot be detected, move the horn closer to the EUT, noting the distance at which a measurement is made.

3.5.4 Test Result of Transmitter Spurious Emissions

Test Conditions	see ANSI C63.10, clause 5.11 & clause 9
Test Setup	see ANSI C63.10, clause 9.12 、9.13

NOTE: If equipment having different channel plan and nominal channel bandwidth modes (see test report clause 1.1.1), the measurements are uninfluenced by different channel plan and nominal channel bandwidth modes, may not need to be repeated for all modes.

3.5.4.1 Test Result of Transmitter Spurious Emissions (Below 30MHz)

All amplitude of spurious emissions that are attenuated by more than 20 dB below the permissible value has no need to be reported.

3.5.4.2 Test Result of Transmitter Spurious Emissions

Temp	22°C	**Humidity**	54%
Test Engineer	Welson Chen	**Test Distance**	3 m
Test Range	30 MHz – 1000 MHz	**Test Configuration**	Normal Link / Mode 3

Vertical

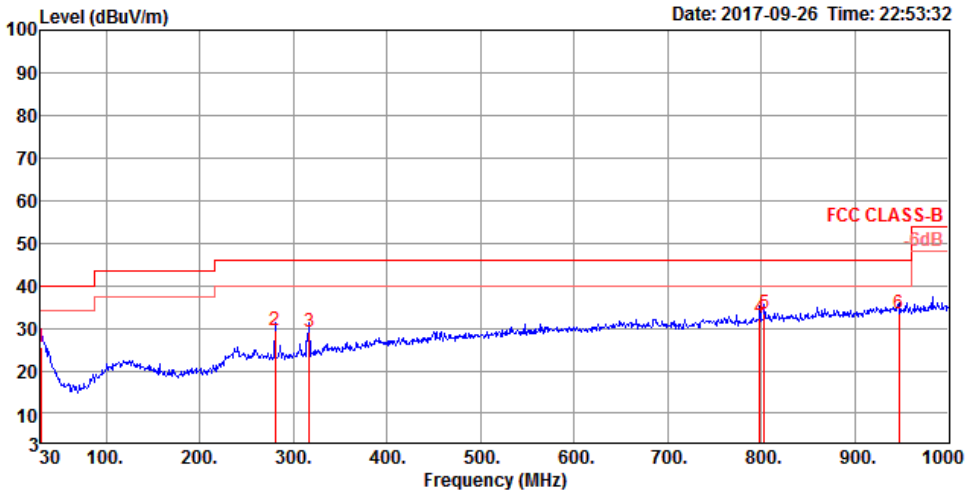

	Freq	Level	Limit Line	Over Limit	Read Level	Cable Loss	Antenna Factor	Preamp Factor	A/Pos	T/Pos	Remark	Pol/Phase
	MHz	dBuV/m	dBuV/m	dB	dBuV	dB	dB/m	dB	cm	deg		
1	30.00	25.37	40.00	-14.63	31.57	0.63	25.60	32.43	200	207	QP	VERTICAL
2	280.26	29.52	46.00	-16.48	40.57	1.93	19.30	32.28	100	78	QP	VERTICAL
3	317.12	28.95	46.00	-17.05	38.98	2.06	20.18	32.27	100	75	QP	VERTICAL
4	798.24	32.38	46.00	-13.62	34.57	3.33	26.60	32.12	200	83	QP	VERTICAL
5	803.09	33.48	46.00	-12.52	35.64	3.33	26.63	32.12	125	292	QP	VERTICAL
6	946.65	33.53	46.00	-12.47	33.24	3.60	27.87	31.18	125	196	QP	VERTICAL

Horizontal

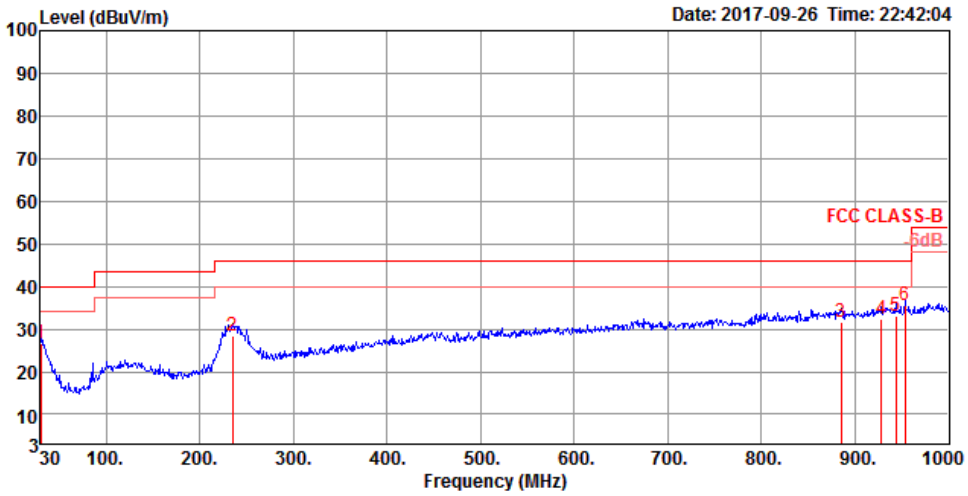

	Freq	Level	Limit Line	Over Limit	Read Level	Cable Loss	Antenna Factor	Preamp Factor	A/Pos	T/Pos	Remark	Pol/Phase
	MHz	dBuV/m	dBuV/m	dB	dBuV	dB	dB/m	dB	cm	deg		
1	30.00	26.64	40.00	-13.36	32.84	0.63	25.60	32.43	300	315	QP	HORIZONTAL
2	234.67	28.58	46.00	-17.42	41.55	1.77	17.55	32.29	125	109	QP	HORIZONTAL
3	885.54	31.65	46.00	-14.35	32.43	3.47	27.41	31.66	150	97	QP	HORIZONTAL
4	928.22	32.34	46.00	-13.66	32.37	3.57	27.74	31.34	100	145	QP	HORIZONTAL
5	943.74	32.92	46.00	-13.08	32.65	3.60	27.85	31.18	125	4	QP	HORIZONTAL
6	953.44	35.42	46.00	-10.58	34.97	3.62	27.92	31.09	125	140	QP	HORIZONTAL

Temp	22°C	**Humidity**	54%
Test Engineer	Welson Chen	**Test Distance**	3 m
Test Range	1 GHz – 18 GHz	**Test Freq.**	Channel 1: 58.32 GHz
Test Date	Sep. 27, 2017		

Vertical

	Freq	Level	Line	Limit	Level	Loss	Factor	Factor			Remark	Pol/Phase
	MHz	dBuV/m	dBuV/m	dB	dBuV	dB	dB/m	dB	cm	deg		
1	1897.14	42.66	74.00	-31.34	45.95	5.42	25.87	34.58	100	190	Peak	VERTICAL
2	1897.44	35.75	54.00	-18.25	39.04	5.42	25.87	34.58	100	190	Average	VERTICAL

Horizontal

	Freq	Level	Line	Limit	Level	Loss	Factor	Factor			Remark	Pol/Phase
	MHz	dBuV/m	dBuV/m	dB	dBuV	dB	dB/m	dB	cm	deg		
1	1897.53	32.18	54.00	-21.82	35.47	5.42	25.87	34.58	123	196	Average	HORIZONTAL
2	1897.69	42.12	74.00	-31.88	45.41	5.42	25.87	34.58	123	196	Peak	HORIZONTAL

Temp	22°C	**Humidity**	54%
Test Engineer	Welson Chen	**Test Distance**	3 m
Test Range	1 GHz – 18 GHz	**Test Freq.**	Channel 2: 60.48 GHz
Test Date	Sep. 27, 2017		

Vertical

	Freq	Level	Line	Limit	Level	Loss	Factor	Factor			Remark	Pol/Phase
	MHz	dBuV/m	dBuV/m	dB	dBuV	dB	dB/m	dB	cm	deg		
1	1897.55	34.97	54.00	-19.03	38.26	5.42	25.87	34.58	100	191	Average	VERTICAL
2	1897.59	42.77	74.00	-31.23	46.06	5.42	25.87	34.58	100	191	Peak	VERTICAL

Horizontal

	Freq	Level	Line	Limit	Level	Loss	Factor	Factor			Remark	Pol/Phase
	MHz	dBuV/m	dBuV/m	dB	dBuV	dB	dB/m	dB	cm	deg		
1	1897.51	42.75	74.00	-31.25	46.04	5.42	25.87	34.58	121	195	Peak	HORIZONTAL
2	1897.51	32.75	54.00	-21.25	36.04	5.42	25.87	34.58	121	195	Average	HORIZONTAL

Temp	22°C	**Humidity**	54%
Test Engineer	Welson Chen	**Test Distance**	3 m
Test Range	1 GHz – 18 GHz	**Test Freq.**	Channel 3: 62.64 GHz
Test Date	Sep. 27, 2017		

Vertical

	Freq	Level	Line	Limit	Level	Loss	Factor	Factor			Remark	Pol/Phase
	MHz	dBuV/m	dBuV/m	dB	dBuV	dB	dB/m	dB	cm	deg		
1	1897.49	35.18	54.00	-18.82	38.47	5.42	25.87	34.58	116	189	Average	VERTICAL
2	1897.55	43.05	74.00	-30.95	46.34	5.42	25.87	34.58	116	189	Peak	VERTICAL

Horizontal

	Freq	Level	Line	Limit	Level	Loss	Factor	Factor			Remark	Pol/Phase
	MHz	dBuV/m	dBuV/m	dB	dBuV	dB	dB/m	dB	cm	deg		
1	1897.46	32.02	54.00	-21.98	35.31	5.42	25.87	34.58	123	194	Average	HORIZONTAL
2	1897.79	42.41	74.00	-31.59	45.69	5.42	25.87	34.57	123	194	Peak	HORIZONTAL

Temp	22°C	**Humidity**	54%
Test Engineer	Welson Chen	**Test Distance**	3 m
Test Range	1 GHz – 18 GHz	**Test Freq.**	Channel 4: 64.80 GHz
Test Date	Sep. 27, 2017		

Vertical

	Freq	Level	Line	Limit	Level	Loss	Factor	Factor			Remark	Pol/Phase
	MHz	dBuV/m	dBuV/m	dB	dBuV	dB	dB/m	dB	cm	deg		
1	1897.58	35.00	54.00	-19.00	38.29	5.42	25.87	34.58	100	188	Average	VERTICAL
2	1897.66	42.67	74.00	-31.33	45.96	5.42	25.87	34.58	100	188	Peak	VERTICAL

Horizontal

	Freq	Level	Line	Limit	Level	Loss	Factor	Factor			Remark	Pol/Phase
	MHz	dBuV/m	dBuV/m	dB	dBuV	dB	dB/m	dB	cm	deg		
1	1897.45	41.35	74.00	-32.65	44.64	5.42	25.87	34.58	115	190	Peak	HORIZONTAL
2	1897.53	30.49	54.00	-23.51	33.78	5.42	25.87	34.58	115	190	Average	HORIZONTAL

Temp	22°C	**Humidity**	54%
Test Engineer	Welson Chen	**Test Distance**	3 m
Test Range	18 GHz – 40 GHz	**Test Freq.**	Channel 1: 58.32 GHz
Test Date	Sep. 27, 2017		

Vertical

	Freq	Level	Line	Limit	Level	Loss	Factor	Factor			Remark	Pol/Phase
	MHz	dBuV/m	dBuV/m	dB	dBuV	dB	dB/m	dB	cm	deg		
1	36866.85	63.75	83.54	-19.79	55.20	18.28	42.00	51.73	116	149	Peak	VERTICAL
2	36869.86	50.02	63.54	-13.52	41.47	18.28	42.00	51.73	116	149	Average	VERTICAL

Horizontal

	Freq	Level	Line	Limit	Level	Loss	Factor	Factor			Remark	Pol/Phase
	MHz	dBuV/m	dBuV/m	dB	dBuV	dB	dB/m	dB	cm	deg		
1	36867.44	50.06	63.54	-13.48	41.51	18.28	42.00	51.73	124	254	Average	HORIZONTAL
2	36869.42	63.98	83.54	-19.56	55.43	18.28	42.00	51.73	124	254	Peak	HORIZONTAL

Temp	22°C	**Humidity**	54%
Test Engineer	Welson Chen	**Test Distance**	3 m
Test Range	18 GHz – 40 GHz	**Test Freq.**	Channel 2: 60.48 GHz
Test Date	Sep. 27, 2017		

Vertical

	Freq	Level	Line	Limit	Level	Loss	Factor	Factor			Remark	Pol/Phase
	MHz	dBuV/m	dBuV/m	dB	dBuV	dB	dB/m	dB	cm	deg		
1	36868.15	50.24	63.54	-13.30	41.69	18.28	42.00	51.73	112	258	Average	VERTICAL
2	36868.77	64.56	83.54	-18.98	56.01	18.28	42.00	51.73	112	258	Peak	VERTICAL

Horizontal

	Freq	Level	Line	Limit	Level	Loss	Factor	Factor			Remark	Pol/Phase
	MHz	dBuV/m	dBuV/m	dB	dBuV	dB	dB/m	dB	cm	deg		
1	36867.93	50.13	63.54	-13.41	41.58	18.28	42.00	51.73	105	165	Average	HORIZONTAL
2	36871.07	64.28	83.54	-19.26	55.73	18.28	42.00	51.73	105	165	Peak	HORIZONTAL

Temp	22°C	**Humidity**	54%
Test Engineer	Welson Chen	**Test Distance**	3 m
Test Range	18 GHz – 40 GHz	**Test Freq.**	Channel 3: 62.64 GHz
Test Date	Sep. 27, 2017		

Vertical

	Freq	Level	Line	Limit	Level	Loss	Factor	Factor			Remark	Pol/Phase
	MHz	dBuV/m	dBuV/m	dB	dBuV	dB	dB/m	dB	cm	deg		
1	36854.10	64.17	83.54	-19.37	55.63	18.25	42.00	51.71	123	229	Peak	VERTICAL
2	36922.10	50.07	63.54	-13.47	41.49	18.34	42.00	51.76	123	229	Average	VERTICAL

Horizontal

	Freq	Level	Line	Limit	Level	Loss	Factor	Factor			Remark	Pol/Phase
	MHz	dBuV/m	dBuV/m	dB	dBuV	dB	dB/m	dB	cm	deg		
1	36916.10	64.46	83.54	-19.08	55.88	18.34	42.00	51.76	108	236	Peak	HORIZONTAL
2	36920.10	50.24	63.54	-13.30	41.66	18.34	42.00	51.76	108	236	Average	HORIZONTAL

Temp	22°C	**Humidity**	54%
Test Engineer	Welson Chen	**Test Distance**	3 m
Test Range	18 GHz – 40 GHz	**Test Freq.**	Channel 4: 64.80 GHz
Test Date	Sep. 27, 2017		

Vertical

	Freq	Level	Line	Limit	Level	Loss	Factor	Factor			Remark	Pol/Phase
	MHz	dBuV/m	dBuV/m	dB	dBuV	dB	dB/m	dB	cm	deg		
1	36864.10	63.73	83.54	-19.81	55.18	18.28	42.00	51.73	101	297	Peak	VERTICAL
2	36896.10	49.86	63.54	-13.68	41.30	18.31	42.00	51.75	101	297	Average	VERTICAL

Horizontal

	Freq	Level	Line	Limit	Level	Loss	Factor	Factor			Remark	Pol/Phase
	MHz	dBuV/m	dBuV/m	dB	dBuV	dB	dB/m	dB	cm	deg		
1	36868.10	50.52	63.54	-13.02	41.97	18.28	42.00	51.73	133	301	Average	HORIZONTAL
2	36934.10	64.55	83.54	-18.99	55.97	18.34	42.00	51.76	133	301	Peak	HORIZONTAL

Temp	22℃	**Humidity**	54%
Test Engineer	Lucas Huang	**Test Date**	Sep. 26, 2017
Test Range	40GHz – 200GHz		

Test Frequency (GHz)	**Rx Antenna Gain (dBi)**	**Measurement Distance (m)**	**Read Worse Frequency (GHz)**	**Read Level (dBm)**
58.32	23	1	56.67	-68.3
EIRP (dBm)	**Specification Distance (m)**	**Power Density (pW/m^2)**	**Limit (pW/cm^2)**	**Test Result**
-23.79	3	3.6932	90.00	Complied

Test Frequency (GHz)	**Rx Antenna Gain (dBi)**	**Measurement Distance (m)**	**Read Worse Frequency (GHz)**	**Read Level (dBm)**
60.48	23	1	40.01	-67.48
EIRP (dBm)	**Specification Distance (m)**	**Power Density (pW/m^2)**	**Limit (pW/cm^2)**	**Test Result**
-25.99	3	2.2238	90.00	Complied

Test Frequency (GHz)	**Rx Antenna Gain (dBi)**	**Measurement Distance (m)**	**Read Worse Frequency (GHz)**	**Read Level (dBm)**
62.64	23	1	41.81	-74.45
EIRP (dBm)	**Specification Distance (m)**	**Power Density (pW/m^2)**	**Limit (pW/cm^2)**	**Test Result**
-32.58	3	0.4878	90.00	Complied

Test Frequency (GHz)	Rx Antenna Gain (dBi)	Measurement Distance (m)	Read Worse Frequency (GHz)	Read Level (dBm)
64.80	23	1	41.86	-70.05
EIRP (dBm)	**Specification Distance (m)**	**Power Density (pW/m^2)**	**Limit (pW/cm^2)**	**Test Result**
-28.17	3	1.3467	90.00	Complied

Note:
EIRP = Prx – Grx + Free Space Path Loss = Prx – Grx + 20Log(4πd/ λ)2
Which
Prx = Read Level.
Grx = Rx Antenna Gain.
A distance factor is offset and the formula is 20LOG(D1/D2)
Which
D1 = Specification Distance
D2 = Measurement Distance

3.6 Frequency Stability

3.6.1 Limit of Frequency Stability

Frequency Stability	Limit
Refer as FCC 15.255(e) and ANSI C63.10-2013, clause 9.14	within the frequency bands
Note: These measurements shall also be performed at normal and extreme test conditions.	

3.6.2 Measuring Instruments

Refer a measuring instruments list in this test report.

3.6.3 Test Procedures

Method of measurement: Refer as ANSI C63.10-2013, clauses 9.14.

3.6.4 Test Setup

Frequency Stability

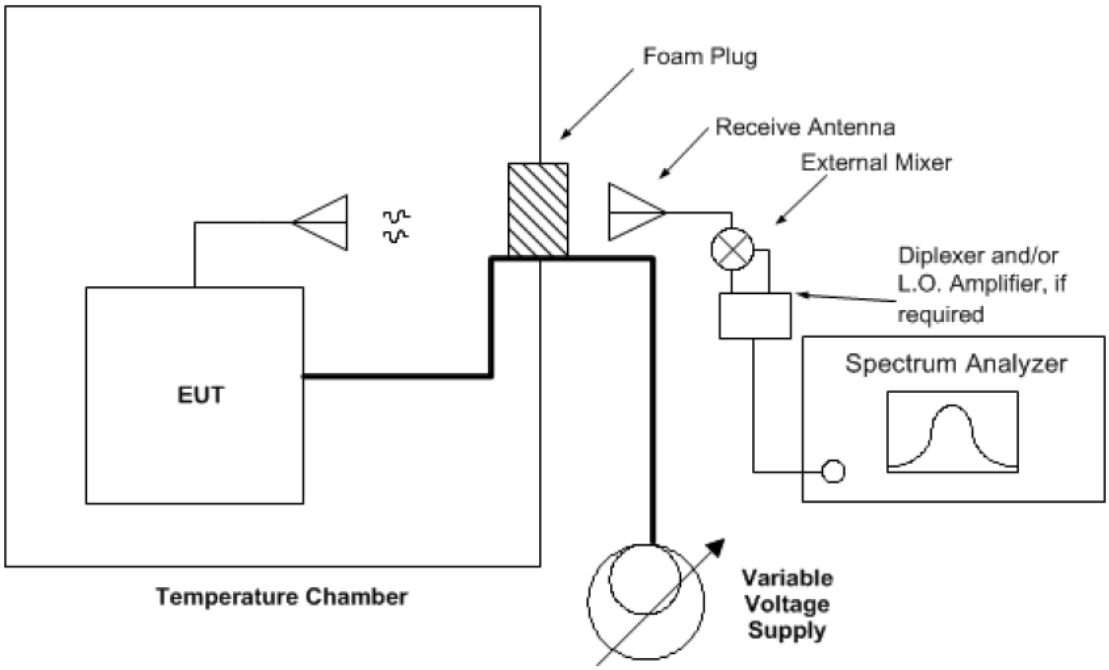

3.6.5 Test Result of Frequency Stability

Test Conditions	see ANSI C63.10, clause 5.11 & clause 9
Test Setup	see ANSI C63.10, clause 9.14
NOTE: If equipment having different channel plan and nominal channel bandwidth modes (see test report clause 1.1.1), the measurements are uninfluenced by different channel plan and nominal channel bandwidth modes, may not need to be repeated for all modes.	

3.6.5.1 Frequency Stability with Respect to Ambient Temperature

Frequency Stability with Respect to Ambient Temperature			
Temp	22℃	**Humidity**	54%
Test Engineer	Lucas Huang	**Test Date**	Sep. 26, 2017
Test Results			
Test Temperature (°C)	**Measured Frequency (MHz)**	**Delta Frequency (kHz)**	**Limit (±kHz)**
-40	60483.6471	-24.10	within band
-30	60483.6476	-23.60	within band
-20	60483.6742	3.00	within band
-10	60483.6751	3.90	within band
0	60483.6754	4.20	within band
10	60483.6745	3.30	within band
20	60483.6712	Reference	within band
30	60483.6475	-23.70	within band
40	60483.6742	3.00	within band
50	60483.6473	-23.90	within band
60	60483.6742	3.00	within band
70	60483.6785	7.30	within band
NOTE: The manufacturer's specified temperature range of -40 to 70°C.			

3.6.5.2 Frequency Stability When Varying Supply Voltage

Frequency Stability When Varying Supply Voltage			
Temp	22℃	**Humidity**	54%
Test Engineer	Lucas Huang	**Test Date**	Sep. 26, 2017
Test Results			
Test Voltage: (Vdc)	**Measured Frequency (MHz)**	**Delta Frequency (kHz)**	**Limit (±kHz)**
4.25	60483.6721	0.90	within band
5	60483.6712	Reference	within band
5.75	60483.6744	3.20	within band

3.7 Operation Restriction and Group Installation

3.7.1 Limit of Operation Restriction and Group Installation

Item	Limit
Operation Restriction	Operation is not permitted for the following products: ♦ Equipment used on aircraft or satellites. (Refer as FCC 15.255 (a)) ♦ Field disturbance sensors, including vehicle radar systems, unless the field disturbance sensors are employed for fixed operation. (Refer as FCC 15.255 (a))
Group Installation	Operation is not permitted for the following products: ♦ External phase-locking (Refer as FCC 15.255(g))

3.7.2 Result of Operation Restriction

Manufacturer declares that EUT will not been used on aircraft or satellites. Then user manual will include a statement to caution EUT is not permitted for used on aircraft or satellites. EUT is a wireless video area network (WVAN) for the connection of consumer electronic (CE) audio and video devices.

3.7.3 Result of Group Installation

The frequency, amplitude and phase of the transmit signal are set within the EUT. There are no external phase-locking inputs or any other means of combining two or more units together to realize a beam-forming array.

4 Test Equipment and Calibration Data

Instrument	Manufacturer	Model No.	Serial No.	Characteristics	Calibration Date	Calibration Due Date	Remark
EMI Receiver	Agilent	N9038A	My52260123	9kHz ~ 8.45GHz	Jan. 23, 2017	Jan. 22, 2018	Conduction (CO01-CB)
LISN	F.C.C.	FCC-LISN-50-16-2	04083	150kHz ~ 100MHz	Dec. 14, 2016	Dec. 13, 2017	Conduction (CO01-CB)
LISN	Schwarzbeck	NSLK 8127	8127647	9kHz ~ 30MHz	Dec. 21, 2016	Dec. 20, 2017	Conduction (CO01-CB)
COND Cable	Woken	Cable	01	150kHz ~ 30MHz	May 23, 2017	May 22, 2018	Conduction (CO01-CB)
Software	Audix	E3	6.120210n	-	N.C.R.	N.C.R.	Conduction (CO01-CB)
Loop Antenna	Teseq	HLA 6120	24155	9kHz - 30 MHz	Mar. 16, 2016*	Mar. 15, 2018*	Radiation (03CH01-CB)
BILOG ANTENNA with 6dB Attenuator	TESEQ & EMCI	CBL6112D & N-6-06	37880 & AT-N0609	20MHz ~ 2GHz	Aug. 30, 2017	Aug. 29, 2018	Radiation (03CH01-CB)
Horn Antenna	EMCO	3115	00075790	750MHz ~ 18GHz	Nov. 10, 2016	Nov. 09, 2017	Radiation (03CH01-CB)
Horn Antenna	Schwarzbeck	BBHA 9170	BBHA9170252	15GHz ~ 40GHz	Jul. 05, 2017	Jul. 04, 2018	Radiation (03CH01-CB)
Pre-Amplifier	EMCI	EMC330N	980332	20MHz ~ 3GHz	May 02, 2017	May 01, 2018	Radiation (03CH01-CB)
Pre-Amplifier	Agilent	8449B	3008A02310	1GHz ~ 26.5GHz	Jan. 16, 2017	Jan. 15, 2018	Radiation (03CH01-CB)
Pre-Amplifier	MITEQ	TTA1840-35-HG	1864479	18GHz ~ 40GHz	Jul. 10, 2017	Jul. 09, 2018	Radiation (03CH01-CB)
Spectrum Analyzer	R&S	FSP40	100056	9kHz ~ 40GHz	Nov. 22, 2016	Nov. 21, 2017	Radiation (03CH01-CB)
EMI Test	R&S	ESCS	100355	9kHz ~ 2.75GHz	May 06, 2017	May 05, 2018	Radiation (03CH01-CB)
RF Cable-low	Woken	Low Cable-16+17	N/A	30 MHz ~ 1 GHz	Oct. 24, 2016	Oct. 23, 2017	Radiation (03CH01-CB)
RF Cable-high	Woken	High Cable-16	N/A	1 GHz ~ 18 GHz	Oct. 24, 2016	Oct. 23, 2017	Radiation (03CH01-CB)
RF Cable-high	Woken	High Cable-16+17	N/A	1 GHz ~ 18 GHz	Oct. 24, 2016	Oct. 23, 2017	Radiation (03CH01-CB)
RF Cable-high	Woken	High Cable-40G#1	N/A	18GHz ~ 40 GHz	Oct. 24, 2016	Oct. 23, 2017	Radiation (03CH01-CB)
RF Cable-high	Woken	High Cable-40G#2	N/A	18GHz ~ 40 GHz	Oct. 24, 2016	Oct. 23, 2017	Radiation (03CH01-CB)

Instrument	Manufacturer	Model No.	Serial No.	Characteristics	Calibration Date	Calibration Due Date	Remark
Mixer	OML	M19HW/A	U91113-1	40 ~ 60 GHz	Sep. 08, 2017*	Sep. 07, 2019*	Conducted (TH01-CB)
Mixer	OML	M15HW/A	V91113-1	50 ~ 75 GHz	Sep. 13, 2017*	Sep. 12, 2019*	Conducted (TH01-CB)
Mixer	OML	M12HW/A	E91113-1	60 ~ 90 GHz	Sep. 16, 2017*	Sep. 15, 2019*	Conducted (TH01-CB)
Mixer	OML	M08HW/A	F91113-1	90 ~ 140 GHz	Sep. 20, 2017*	Sep. 19, 2019*	Conducted (TH01-CB)
Mixer	OML	M05HW/A	G91113-1	140 ~ 220 GHz	Sep. 23, 2017*	Sep. 22, 2019*	Conducted (TH01-CB)
Standard Horn Antenna	Custom Microwave	M19RH	U91113-A	40 ~ 60 GHz	N.C.R	N.C.R	Radiation (03CH01-CB)
Standard Horn Antenna	Custom Microwave	M15RH	V91113-A	50 ~ 75 GHz	N.C.R	N.C.R	Radiation (03CH01-CB)
Standard Horn Antenna	Custom Microwave	M12RH	E91113-A	60 ~ 90 GHz	N.C.R	N.C.R	Radiation (03CH01-CB)
Standard Horn Antenna	Custom Microwave	M08RH	F91113-A	90 ~ 140 GHz	N.C.R	N.C.R	Radiation (03CH01-CB)
Standard Horn Antenna	Custom Microwave	M05RH	G91113-A	140 ~ 220 GHz	N.C.R	N.C.R	Radiation (03CH01-CB)
Pico Scope	Pico	Pico Scope 6402C	CX372/002	N/A	Jul. 26, 2017	Jul. 25, 2018	Radiation (03CH01-CB)
*Detector	Millitech	DET-15-RPFW 0	#A16473(038)	50 ~ 75 GHz	Dec. 29, 2015*	Dec. 28, 2017*	Radiation (03CH01-CB)
Temp. and Humidity Chamber	Ten Billion	TTH-D3SP	TBN-931011	-30~100 degree	Jun. 02, 2017	Jun. 01, 2018	Conducted (TH01-CB)

Note: Calibration Interval of instruments listed above is one year.

"*" Calibration Interval of instruments listed above is two years.

N.C.R. means Non-Calibration required.

5 Measurement Uncertainty

Test Items	Uncertainty	Remark
Conducted Emission (150kHz ~ 30MHz)	3.2 dB	Confidence levels of 95%
Radiated Emission (30MHz ~ 1,000MHz)	3.6 dB	Confidence levels of 95%
Radiated Emission (1GHz ~ 18GHz)	3.7 dB	Confidence levels of 95%
Radiated Emission (18GHz ~ 40GHz)	3.5 dB	Confidence levels of 95%
Radiated Emission (40GHz ~ 220GHz)	4.7 dB	Confidence levels of 95%
Temperature	0.7°C	Confidence levels of 95%