hp procurve wireless AP 420 ww/na

Installation and Getting Started Guide

© Copyright 2003 Hewlett-Packard Company
All Rights Reserved.

This document contains information which is protected by copyright. Reproduction, adaptation, or translation without prior permission is prohibited, except as allowed under the copyright laws.

Publication Number

J8130-90001
July 2003

Applicable Products

hp procurve wireless AP 420 ww/na (J8131A/J8130A)

Disclaimer

The information contained in this document is subject to change without notice.

HEWLETT-PACKARD COMPANY MAKES NO WARRANTY OF ANY KIND WITH REGARD TO THIS MATERIAL, INCLUDING, BUT NOT LIMITED TO, THE IMPLIED WARRANTIES OF MERCHANTABILITY AND FITNESS FOR A PARTICULAR PURPOSE. Hewlett-Packard shall not be liable for errors contained herein or for incidental or consequential damages in connection with the furnishing, performance, or use of this material.

Hewlett-Packard assumes no responsibility for the use or reliability of its software on equipment that is not furnished by Hewlett-Packard.

Warranty

See the Customer Support/Warranty booklet included with the product.

A copy of the specific warranty terms applicable to your Hewlett-Packard products and replacement parts can be obtained from your HP Sales and Service Office or authorized dealer.

Safety

Before installing and operating these products, please read the “Installation Precautions” in chapter 2, “Installing the Access Point 420ww/na”, and the safety statements in appendix C, “Safety and Regulatory Statements”.

Hewlett-Packard Company
8000 Foothills Boulevard, m/s 5552
Roseville, California 95747-5552
http://www.hp.com/go/hpprocurve

Contents

1 Introducing the hp procurve wireless AP 420 ww/na

Top of the Access Point 1-3
LEDs 1-3

Back of the Access Point 1-5
Antennas 1-5
Console Port 1-6
Network Port 1-6
Power Connector 1-6
Reset Button 1-7

Access Point Features 1-8

2 Installing the hp procurve wireless AP 420 ww/na

Included Parts 2-1

Installation Procedures 2-2
Summary 2-2
Installation Precautions: 2-3
1. Prepare the Installation Site 2-4
3. Verify the Access Point Passes the Self Test 2-5
LED Behavior: 2-6
4. Mount the Access Point 2-7
Wall Mounting 2-7
Horizontal Surface Mounting 2-9
5. Connect the Access Point to a Power Source 2-9
6. Connect the Network Cable 2-10
Using the RJ-45 Connectors 2-10
7. Position the Antennas on the Access Point 2-10
8. (Optional) Connect a Console to the Access Point 420wl 2-11
Terminal Configuration 2-11
Direct Console Access 2-12

Sample Network Topologies 2-13
Ad Hoc Wireless LAN (no access point) 2-13

Infrastructure Wireless LAN 2-14
Infrastructure Wireless LAN for Roaming Wireless PCs 2-15

3 Getting Started With Access Point Configuration

Recommended Minimal Configuration 3-1
Using the Command Line Interface 3-2
Where to Go From Here 3-6

Using the IP Address for Remote Access Point Management 3-7
Starting a Telnet Session 3-7
Starting a Web Browser Session 3-7

4 Troubleshooting

Basic Troubleshooting Tips 4-1

Diagnosing with the LEDs 4-3

Proactive Networking 4-5

Hardware Diagnostic Tests 4-6
Testing the Access Point by Resetting It 4-6
Checking the Access Point's LEDs 4-6
Checking Console Messages 4-6
Testing Twisted-Pair Cabling 4-7
Testing Access Point-to-Device Network Communications 4-7
Testing End-to-End Network Communications 4-7

Restoring the Factory Default Configuration 4-8

Downloading New Access Point Software 4-9

HP Customer Support Services 4-9
Before Calling Support 4-9

A Specifications

Physical A-1
Electrical A-1
Environmental A-1
Acoustic ? A-2
Connectors A-2
Safety A-2

EMC Compliance (Class B) A-2
Radio Signal Certification A-2
Immunity A-2
Wireless A-3

B Access Point Port and Network Cables

Access Point Ports B-1
Twisted-Pair Cables B-1

Twisted-Pair Cable/Connector Pin-Outs B-2

Straight-Through Twisted-Pair Cable for
10 Mbps or 100 Mbps Network Connections B-3
Cable Diagram B-3
Pin Assignments B-3

Crossover Twisted-Pair Cable for
10 Mbps or 100 Mbps Network Connection B-4
Cable Diagram B-4
Pin Assignments B-4

C Safety and EMC Regulatory Statements

Safety Information C-1

Informations concernant la sécurité C-2

Hinweise zur Sicherheit C-3

Considerazioni sulla sicurezza C-4

Consideraciones sobre seguridad C-5

Safety Information (Japan) C-6

Safety Information (China) C-7

EMC Regulatory Statements C-8

U.S.A. C-8
Canada C-8
Australia/New Zealand C-8
Japan C-9
Korea C-9
Taiwan C-9
European Community C-10

Introducing the hp procurve wireless AP 420 ww/na

The HP Procurve Access Point 420ww/na is a wireless repeater that seamlessly integrates with existing wired networks to support connectivity for mobile users or wireless workstations. This solution offers fast, reliable wireless connectivity with considerable cost savings over wired LANs. Just install enough wireless access points to cover your network area, plug wireless cards into your notebooks or install wireless adapters into your desktops, and start networking.

hp procurve wireless AP 420 ww/na (J8131A/J8130A)

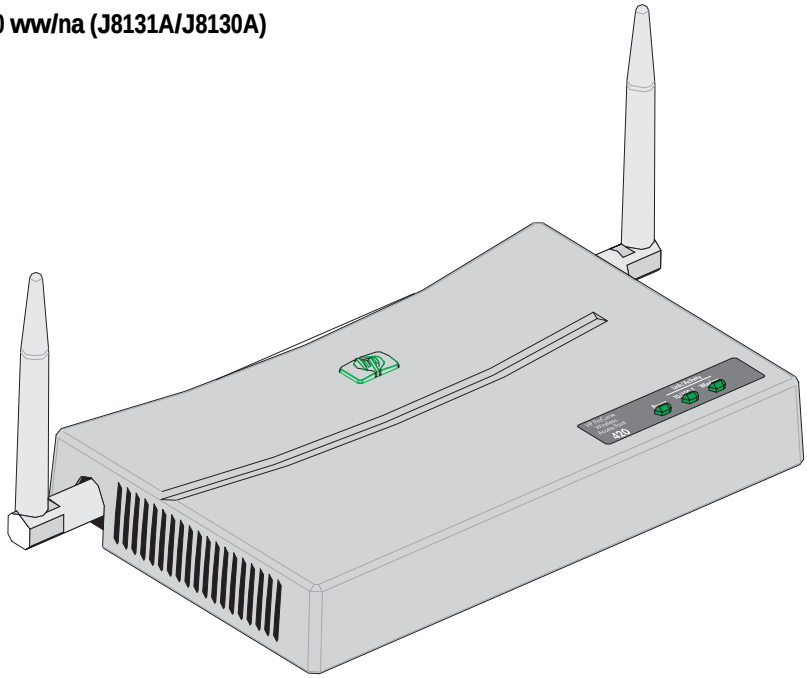

Throughout this manual, this access point will be abbreviated as the hp procurve wireless AP 420 ww/na.

The AP 420 ww/na has one 10/100Base-TX RJ-45 port. This port also supports Power over Ethernet based on the IEEE 802.3af standard. The access point supports wireless connectivity at speeds up to 54 Mbps based on the IEEE 802.11g standard.

This access point is designed to be used primarily for connecting wireless clients to an enterprise network. This access point allows wireless clients to connect directly to each other, or to connect to other computers or network resources located on the wired network. In addition, the Access Point 420wl offers full network management capabilities.

This chapter describes your hp procurve wireless AP 420 ww/na including:

- Top and back of the access point
- Access point features

Top of the Access Point

hp procurve wireless AP 420 ww/na

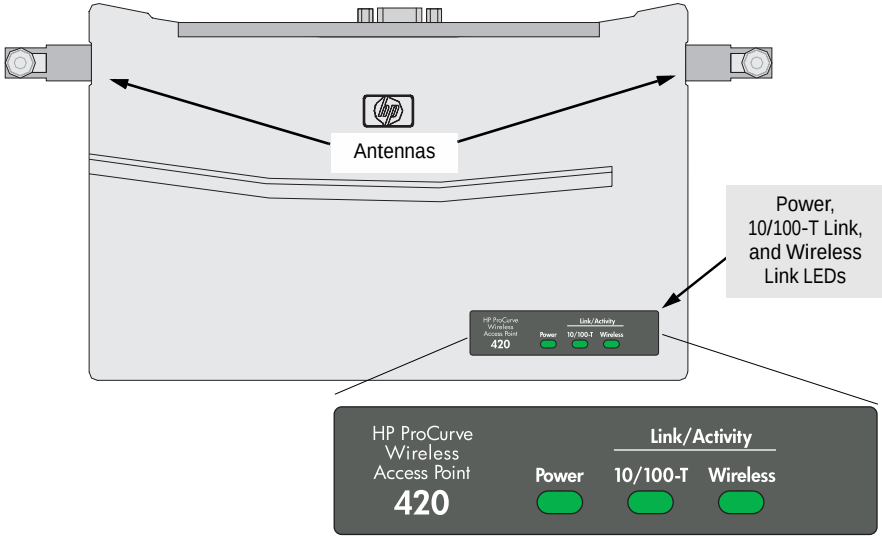

LEDs

Table 1-1. Access Point LEDs

Access Point LEDs	State	Meaning
Power (green)	On	The access point is receiving power.
	Off	The access point is NOT receiving power.
	Blinking*	The access point is undergoing self test or downloading software. The self test and initialization are in progress after you have power cycled or reset the access point. The access point is not operational until this LED stops blinking.
	Blinking* (prolonged)	A component of the access point has failed its self test.

Access Point LEDs	State	Meaning
10/100-T	On (green)	The LAN port is enabled and receiving a link indication from 100 Mbps device.
	On (amber)	The LAN port is enabled and receiving a link indication from 10 Mbps device.
	Off	The LAN port has no active network cable connected, or is not receiving a link beat. Otherwise, the port may have been disabled through the access point console, or the web browser interface.
	Blinking*	The LAN port is transmitting or receiving traffic.
Wireless	On	The wireless interface is enabled and receiving a link indication from a wireless client
	Off	The wireless interface is not receiving a link beat. Otherwise, the wireless interface may have been disabled through the access point console, or the web browser interface.
	Blinking*	The wireless interface is transmitting or receiving traffic.
*** The blinking behavior is an on/off cycle once every 1.6 seconds, approximately.**		

Back of the Access Point

hp procurve wireless AP 420 ww/na

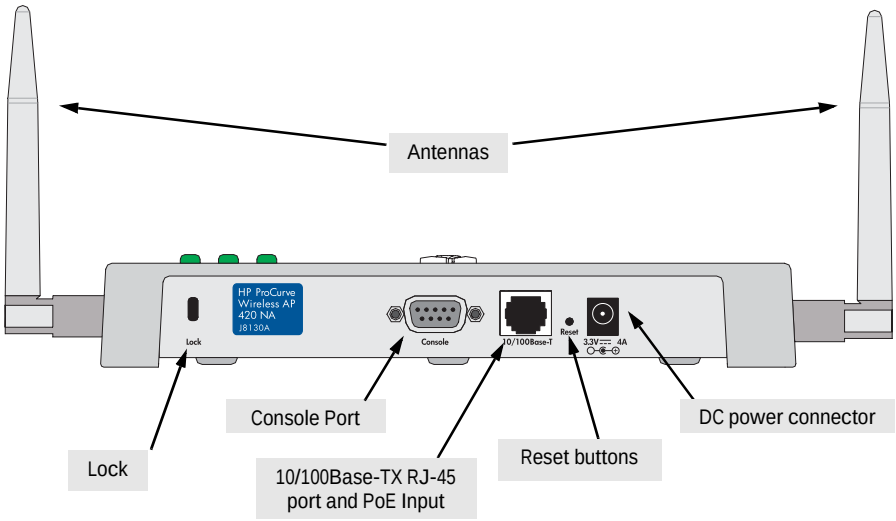

Antennas

The access point includes two antennas for wireless communications. The outbound signal transmitted from both antennas is identical, but only the best inbound signal received on one of the antennas is used. The antennas transmit the outgoing signal as a toroidal sphere, so the antennas should be adjusted to different angles to provide better coverage. For further information on positioning the antennas, see “Position the Antennas on the Access Point” on page 2-10.

Lock

The access point includes a Kensington security slot on the rear panel, marked “Lock”. You can prevent unauthorized removal the access point by wrapping the Kensington security cable (not provided) around an unmoveable object, inserting the lock into the slot, and turning the key.

Console Port

This port is used to connect a console to the access point by using the serial cable supplied with the access point. This connection is described under "Connect a Console to the Access Point" in chapter 2, "Installing the Access Point 420wl". The console can be a PC or workstation running a VT-100 terminal emulator, or a VT-100 terminal.

Network Port

The access point includes one 10/100Base-TX port. This port uses MDI (i.e., internal straight-through) pin configuration. You can therefore use straight-through twisted-pair cable to connect this port to most network interconnection device such as switch or router that provide MDI-X ports. However, if you need to connect the access point to a workstation or other device that only has MDI ports, then use crossover twisted-pair cable.

Ports on most HP switches have the "HP Auto MDIX" feature, which means that you can use either straight-through or crossover twisted-pair cables to connect the access point to these switches.

Refer to following section for information on supplying power to the access point's network port from a network device, such as a switch, that provides Power over Ethernet (PoE).

Power Connector

The AP 420 ww/na does not have a power switch; it is powered on when connected to the AC power adapter, and the power adapter is connected to an active AC power source. The access point automatically adjusts to any voltage between 100--240 volts and either 50 or 60 Hz. There are no voltage range settings required.

Caution

Use only the AC power adapter supplied with the access point. Use of other adapters, including adapters that came with other HP network products, may result in damage to the equipment.

The access point may also receive Power over Ethernet (PoE) from a switch or other network device that supplies power over the network cable based on the IEEE 802.3af standard.

Note that if the access point is connected to a PoE source device and also connected to a local power source through the AC power adapter, PoE will be disabled.

Reset Button

This button is used to restore the factory default configuration. When the Reset button is pressed, any configuration changes you may have made through the access point console, the web browser interface, and SNMP management are removed, and the factory default configuration is restored to the access point. For the specific method to restore the factory default configuration, see “Restoring the Factory Default Configuration” in chapter 4, “Troubleshooting” of this manual.

Access Point Features

The wireless features of the Access Point 420ww/na include:

- supports up to 64 wireless clients.
- 802.11g draft Compliant – interoperable with multiple vendors.
- provides seamless roaming within 802.11g draft WLAN environment.
- precise control over signal transmission power and data rate.
- advanced security through 64/128-bit WEP encryption, Wi-Fi Protected Access (WPA), 802.1x, remote authentication via RADIUS server, and MAC address filtering features to protect your sensitive data and authenticate only authorized users to your network.
- remote logging of system messages.
- time synchronization via SNTP server for message logs.
- supports PPP dial-in connection using standard dial-up program.

The other basic features of the Access Point 420ww/na include:

- one 10/100Base-TX RJ-45 port.
- supports Power over Ethernet based on the IEEE 802.3af standard.
- automatic learning of the network addresses in the access point's address forwarding table.
- full-duplex operation for the 10/100 RJ-45 port when connected to other auto-negotiating devices.
- easy management of the access point through several available interfaces:
  - **console interface**—a full featured, easy to use, VT-100 terminal interface that is especially good for out-of-band access point management or for Telnet access to the access point.
  - **web browser interface**—an easy to use built-in graphical interface that can be accessed from common web browsers.
- support for one IEEE 802.1Q-compliant VLAN so the access point can join the appropriate logical grouping that fits your business needs.
- support for many advanced features to enhance network performance—for a description, see the *Management and Configuration Guide,* which is on the Documentation CD-ROM that is included with your access point.
- download of new access point software for product enhancements or bug fixes.

Installing the hp procurve wireless AP 420 ww/na

The HP Access Point 420ww/na is easy to install. It comes with an accessory kit that includes a bracket for mounting the access point on a wall. The bracket is designed to allow mounting the access point in a variety of locations and orientations.

This chapter shows you how to install your Access Point 420ww/na.

Included Parts

The AP 420 ww/na has the following components shipped with it:

- *hp procurve wireless AP 420 ww/na Installation and Getting Started Guide* (J8130-90001), this manual
- *HP Procurve Product Documentation CD-ROM* (contains PDF file copies of the documentation for the Access Point 420ww/na, including the *Management and Configuration Guide*)
- Console cable
- Customer Support/Warranty booklet
- Accessory kit (5064-2085?)
  - one mounting bracket
  - four 5/8-inch number 12 wood screws to attach the access point to a wall
  - four plastic wall plugs for mounting on brick or concrete wall
  - four rubber feet
- AC power adapter, one of the following:

Australia/New Zealand	8120-6803 ?
China	8120-8377
Continental Europe	8120-6802
Denmark	8120-6806
Japan	8120-6804
Switzerland	8120-6807
United Kingdom/Hong Kong/Singapore	8120-8709
United States/Canada/Mexico	8120-6805

Installation Procedures

Summary

Follow these easy steps to install your access point. The rest of this chapter provides details on these steps.

1. **Prepare the installation site (*page 2-4*).** Make sure that the physical environment into which you will be installing the access point is properly prepared, including having the correct network cabling ready to connect to the access point and having an appropriate location for the access point. *Please see page 2-3 for some installation precautions.*
2. **Verify that the access point passes self test (*page 2-5*).** This is a simple process of plugging the access point into a power source, or into a switch that provides Power over Ethernet, and observing that the LEDs on the access point's front panel indicate correct access point operation.
3. **Mount the access point (*page 2-7*).** The Access Point 420ww/na can be mounted on a wall, or on a horizontal surface.
4. **Connect power to the access point (*page 2-9*).** Once the access point is mounted, plug it into the nearby main power source, or into a switch that provides Power over Ethernet.
5. **Connect to the network (*page 2-10*).** Using the appropriate network cable, connect the access point to a network connection point, such as a switch.
6. **Position the antennas on the access point (*page 2-10*).** Position each antenna along a different axis to enhance signal coverage.
7. **Connect a console to the access point (optional—*page 2-11*).** You may wish to modify the access point's configuration, for example, to configure an IP address so it can be managed using a web browser, from an SNMP network management station, or through a Telnet session. Configuration changes can be made easily by using the included console cable to connect a PC to the access point's console port.

At this point, your access point is fully installed. See the rest of this chapter if you need more detailed information on any of these installation steps.

Installation Precautions:

Follow these precautions when installing your HP Access Point 420ww/na.

Cautions

- Make sure that the power source circuits are properly grounded, then use the power adapter supplied with the access point to connect it to the power source.
- You can alternatively power the access point through a network connection to a switch or other network connection device that provides Power over Ethernet. However, note that if the access point is connected to a power source, Power over Ethernet will be disabled.
- Use only the AC power adapter supplied with the access point. Use of other adapters, including adapters that came with other HP network products, may result in damage to the equipment.
- When installing the access point, note that the AC outlet should be near the access point and should be easily accessible in case the access point must be powered off.
- Ensure that the access point does not overload the power circuits, wiring, and over-current protection. To determine the possibility of overloading the supply circuits, add together the ampere ratings of all devices installed on the same circuit as the access point and compare the total with the rating limit for the circuit. The maximum ampere ratings are usually printed on the devices near the AC power connectors.
- Do not install the access point in an environment where the operating ambient temperature might exceed 55°C (131°F).
- Make sure the air flow around the sides of the access point is not restricted.

1. Prepare the Installation Site

- **Cabling Infrastructure** - Ensure that the cabling infrastructure meets the necessary network specifications. See the following table for cable types and lengths, and see appendix B, “Access Point Port and Network Cables” for more information:

Table 2-1. Summary of Cable Types to Use With the Access Point

Port Type	Cable Type	Length Limits
	Twisted-Pair Cables	
10/100Base-TX	• **10 Mbps operation:** Category 3, 4, or 5, 100-ohm unshielded twisted-pair (UTP) • **100 Mbps operation:** Category 5, 100-ohm UTP or shielded twisted-pair (STP) cable.	100 meters **Note:** Since the 10Base-T operation is through 10/100Base-TX ports, if you ever want to upgrade the ports to 100Base-TX, it would be best to cable the ports initially with category 5 cable. The 10/100-Base-TX port on the Access Point 420ww/na uses an MDI pin configuration, which requires you to use straight-through cable when connecting to another device that has an MDI-X port, or crossover cable when connecting to a device that has an MDI port. However, if the device to which you are connecting supports auto-MDIX, then you can use either straight-through or crossover cable.

- **Installation Location** - Before installing the access point, plan its location and orientation relative to other devices and equipment:
  - Try to place the access point in the center of your wireless network. Normally, the higher you place the antenna, the better the performance. You may need to reposition the access point after testing the signal strength on several wireless clients to ensure that the access point’s location provides optimal reception throughout your office.
  - In the back of the access point, leave at least 7.6 cm (3 inches) of space for the twisted-pair cabling and the power cord.
  - On the sides of the access point, leave at least 7.6 cm (3 inches) for cooling.

3. Verify the Access Point Passes the Self Test

Before mounting the access point in its network location, you should first verify that it is working properly by plugging it into a power source, or a switch that provides Power over Ethernet, and verifying that it passes its self test.

1. Connect a network cable from a PoE source device (such as a switch) to the RJ-45 jack on the back of the access point, or connect the power adapter supplied with the access point to the power connector on the back of the access point, and then into a properly grounded electrical outlet.

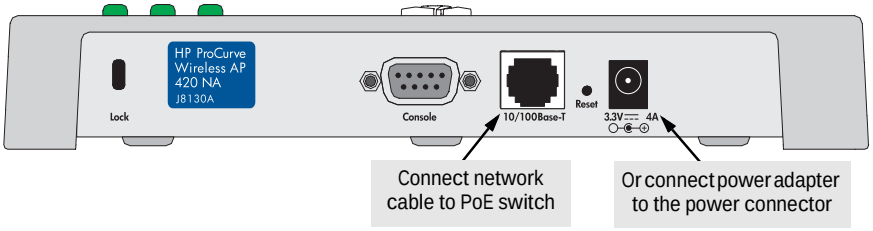

Note

The AP 420 ww/na does not have a power switch. It is powered on when the power adapter is connected to the access point and to a power source, or when a network cable is connected to the access point and to a network device that provides Power over Ethernet. For safety, when connecting to an electrical outlet, the power outlet should be located near the access point.

Use only the AC power adapter supplied with the access point. Use of other adapters, including adapters that came with other HP network products, may result in damage to the equipment.

2. Check the LEDs on the access point as described below.

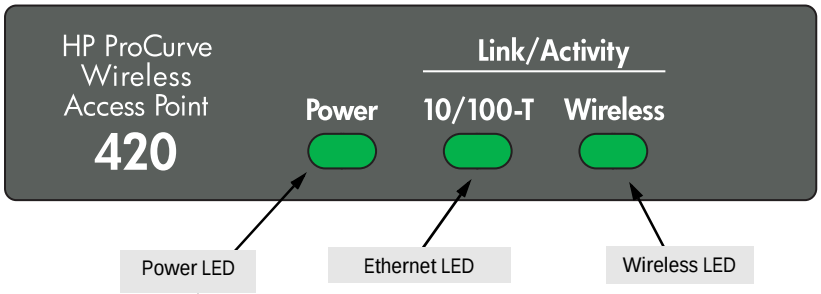

When the access point is powered on, it performs its diagnostic self test. The self test takes approximately 50 seconds to complete.

LED Behavior:

During the self test:

- The 10/100BASE-T and Wireless LEDs go off and then may come on again during phases of the self test. For the duration of the self test, the Power LED blinks.

When the self test completes successfully:

- The **Power** LED remains on.
- The **10/100BASE-T** and **Wireless** LEDs on the top of the access point go into their normal operational mode:
  - If the ports are connected to active network devices, the LEDs should be on.
  - If the ports are not connected to active network devices, the LEDs will stay off.

If the LED display is different than what is described above, especially if the **Power** LED does not stop blinking, the self test has not completed correctly. Refer to chapter 4, “Troubleshooting” for diagnostic help.

4. Mount the Access Point

After you have verified that the access point passes the self test, you are ready to mount the access point in a stable location. The Access Point 420ww/na can be mounted in these ways:

- on a wall
- on a horizontal surface

Wall Mounting

You can mount the access point on a wall as shown in the illustrations on the next page.

Caution

The access point should be mounted only to a wall or wood surface that is at least 1/2-inch plywood or its equivalent.

1. Position the mounting bracket on the wall, and mark the holes.
2. To mount the access point on a plastered brick or concrete wall, first drill four holes 22 mm deep and 3.5 mm in diameter, and press the included four wall plugs firmly into the drilled holes until they are flush with the surface of the wall.
3. Set the four 5/8-inch number 12 wood screws in the holes, leaving about 3 mm (0.12 in.) clearance from the wall.
4. Position the mounting bracket over the wall screws, slide the bracket onto the screws, and then tighten down the screws.
5. Slide the access point into the protruding slots on the back of the mounting bracket. The two retaining latches will slip into place over the back edge of the access point.
6. To prevent unauthorized removal of the access point, you can use a Kensington Slim MicroSaver security cable (not included) to attach the access point to an immovable object.

Mounting the Bracket on a Wall

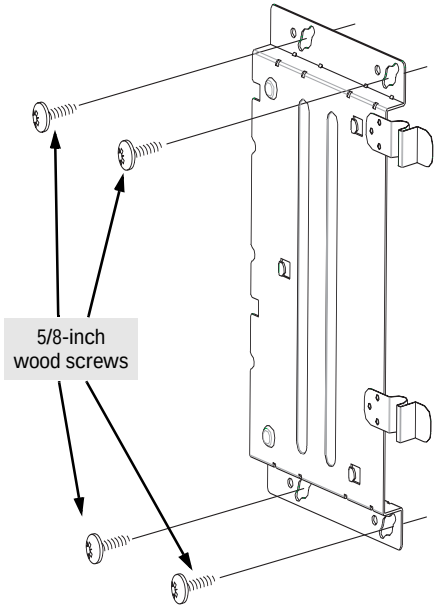

Sliding the Access Point onto the Bracket

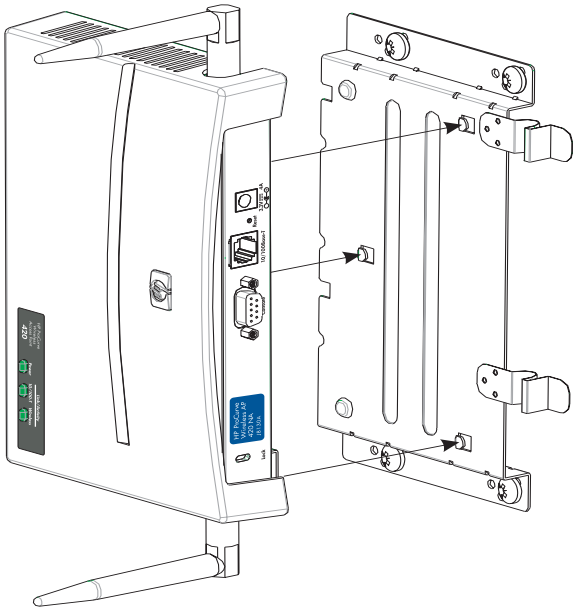

Horizontal Surface Mounting

Place the access point on a table or other horizontal surface. The access point comes with rubber feet in the accessory kit that can be used to help keep the access point from sliding on the surface.

Attach the rubber feet to the four corners on the bottom of the access point within the embossed lines. Use a sturdy surface in an uncluttered area. You may want to secure the networking cable and access point's power cord to the table leg or other part of the surface structure to help prevent tripping over the cords.

Caution

Make sure the air flow is not restricted around the sides of the access point.

5. Connect the Access Point to a Power Source

1. Plug the included power adapter into the access point's power connector and into a nearby AC power source.

   Or, alternatively, connect the Ethernet port on the access point to a switch or other network device that provides Power over Ethernet.

2. Re-check the LEDs during self test. See "LED Behavior" on page 2-6.

6. Connect the Network Cable

Connect the network cable, described under “Cabling Infrastructure” (page 2-4), from the network device or your patch panel to the RJ-45 port on the access point.

Using the RJ-45 Connectors

To connect:
Push the RJ-45 plug into the RJ-45 jack until the tab on the plug clicks into place. When power is on for the access point and for the connected device, the 10/100BASE-T link LED should light to confirm a powered-on device (for example, an end node) is at the other end of the cable.

If the 10/100BASE-T link LED does *not* go on when the network cable is connected to the port, see “Diagnosing with the LEDs” in chapter 4, “Troubleshooting”.

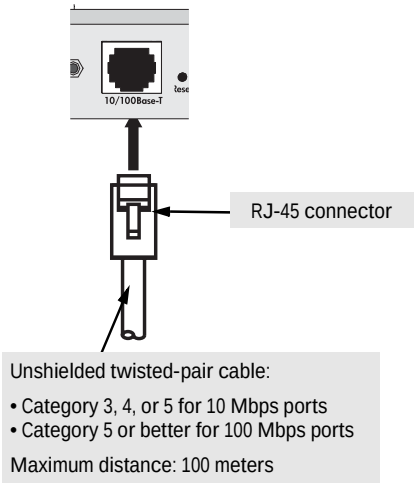

To disconnect:
Press the small tab on the plug and pull the plug out of the jack.

7. Position the Antennas on the Access Point

The antennas emit signals along a toroidal plane – and thus provide more effective coverage when positioned along alternate axes. For example, you might position the antennas around 45 to 90 degrees from each other.

The access point also compares the strength of an incoming signal on both antennas, and uses the antenna receiving the stronger signal to communicate with a wireless client.

8. (Optional) Connect a Console to the AP 420 ww/na

The AP 420 ww/na has a full-featured, easy to use console interface for performing access point management tasks including the following:

- Modify the access point's configuration to optimize access point performance, enhance network traffic control, and improve network security
- Download new software to the access point
- Add passwords to control access to the access point from the console, web browser interface, and network management stations

The console can be accessed through these methods:

- **Out-of-Band:** The AP 420 ww/na comes with a serial cable for connecting a PC or VT-100 terminal, to be used as a console, directly to the access point.
- **In-Band:** Access the console using Telnet from a PC or UNIX station on the network, and a VT-100 terminal emulator. This method requires that you first configure the access point with an IP address and subnet mask by using either out-of-band console access or through DHCP. For more information on IP addressing and on starting a Telnet session, see chapter 3, "Getting Started With Access Point Configuration", and the *Management and Configuration Guide*, which is on the Documentation CD-ROM that came with your access point.

The AP 420 ww/na can simultaneously support one out-of-band console session through the Console Port and four in-band Telnet console sessions.

Terminal Configuration

To connect a console to the access point, configure the PC terminal emulator as a DEC VT-100 (ANSI) terminal or use a VT-100 terminal, and configure either one to operate with these settings:

- 9600 baud
- 8 data bits, 1 stop bit, no parity, and flow control set to None
- For the Windows Terminal program, also disable (uncheck) the "Use Function, Arrow, and Ctrl Keys for Windows" option ?
- For the Hilgraeve HyperTerminal program, select the "Terminal keys" option for the "Function, arrow, and ctrl keys act as" parameter

You can only attach to the console using these configuration settings.

Direct Console Access

To connect a console to the access point, follow these steps:

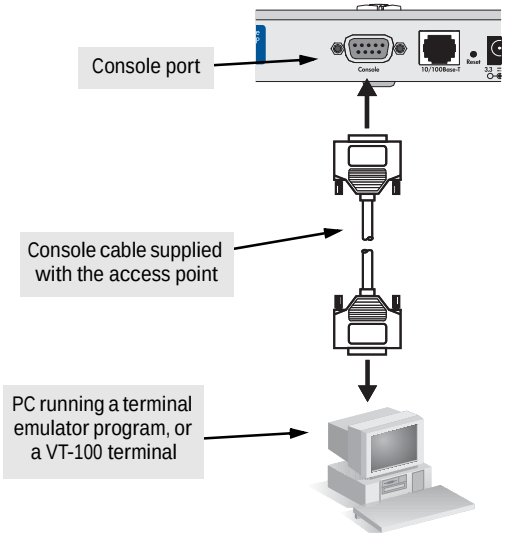

1. Connect the PC or terminal to the access point's Console port using the console cable included with the AP 420 ww/na. (If your PC or terminal has a 25-pin serial connector, first attach a 9-pin to 25-pin straight-through adapter at one end of the console cable.)
2. Turn on the terminal or PC's power and, if using a PC, start the PC terminal program.
3. Enter "admin" at the "Username:" prompt, and press the [Enter] key at the "Password" prompt. You will then see the access point console command (CLI) prompt, for example:

   hp procurve wireless AP 420 ww/na

If you want to continue with console management of the access point at this time, see chapter 3, "Getting Started With Access Point Configuration" for some basic configuration steps. For more detailed information, refer to the *Management and Configuration Guide,* which is on the Documentation CD-ROM that came with your access point.

Sample Network Topologies

This section shows you a few sample network topologies in which the Access Point 420ww/na is implemented. The wireless solution supports a stand-alone wireless network configuration as well as an integrated configuration with wired Ethernet LANs. Wireless network cards, adapters, and access points can be configured as:

- Ad hoc for departmental or SOHO LANs
- Infrastructure for wireless LANs
- Infrastructure wireless LAN for roaming wireless PCs

For more topology information, see the HP network products World Wide Web site, *http://www.hp.com/go/hpprocurve*.

Ad Hoc Wireless LAN (no access point)

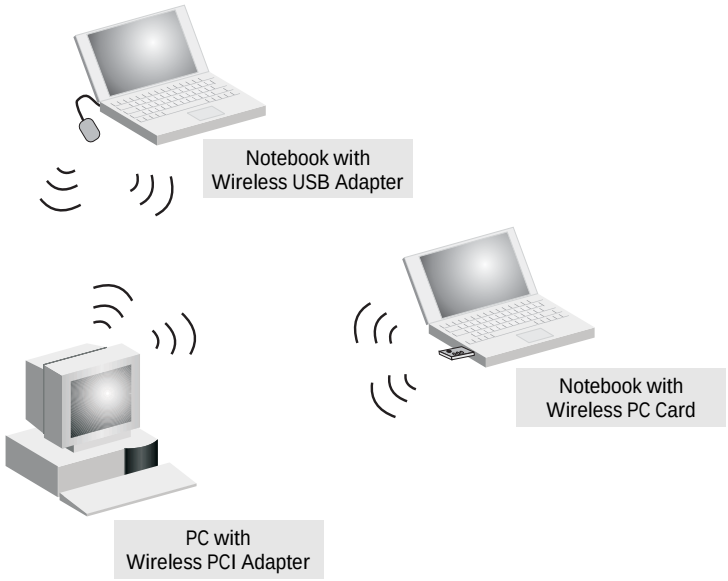

An ad-hoc wireless LAN consists of a group of computers, each equipped with a wireless adapter, connected via radio signals as an independent wireless LAN. Computers in a specific ad-hoc wireless LAN must therefore be configured to the same radio channel. An ad-hoc wireless LAN can be used for a branch office or SOHO operation.

Infrastructure Wireless LAN

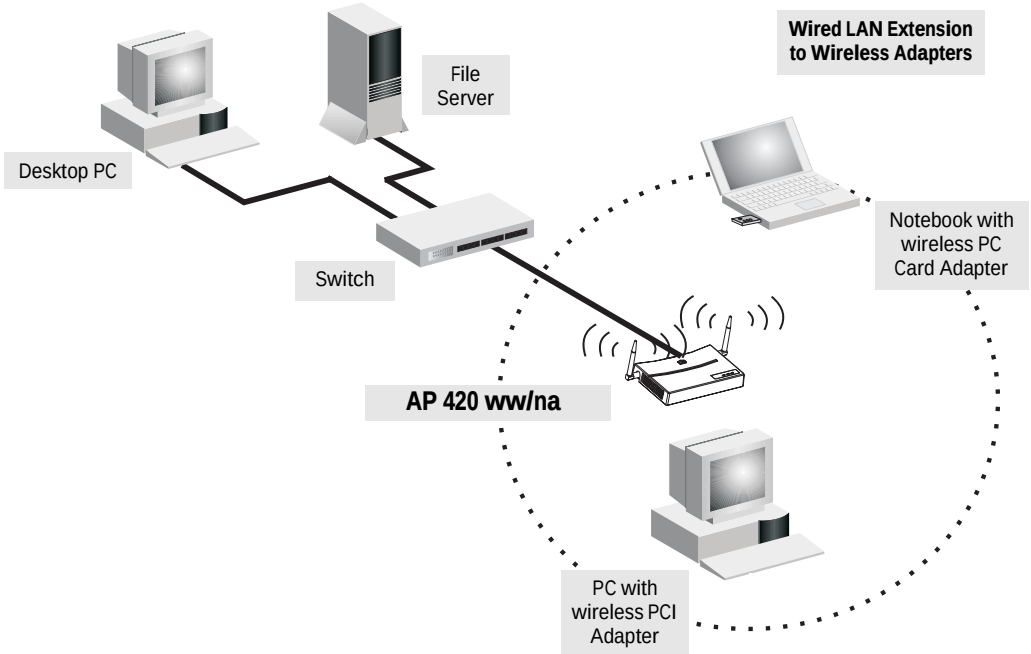

The Access Point 420ww/na can provide access to a wired LAN for wireless clients. An integrated wired/wireless LAN is called an Infrastructure configuration. A Basic Service Set (BSS) consists of a group of wireless PC users, and an access point that is directly connected to the wired LAN. Each wireless PC in this BSS can talk to any computer in its wireless group via a radio link, or access other computers or network resources in the wired LAN infrastructure via the access point.

The infrastructure configuration not only extends the accessibility of wireless PCs to the wired LAN, but also increases the effective wireless transmission range for wireless PCs by passing their signal through one or more access points.

A wireless infrastructure can provide an extension of the wired LAN to wireless clients for access to a local resources, or for a bridged connection between mobile workers located at distant points on the network.

Infrastructure Wireless LAN for Roaming Wireless PCs

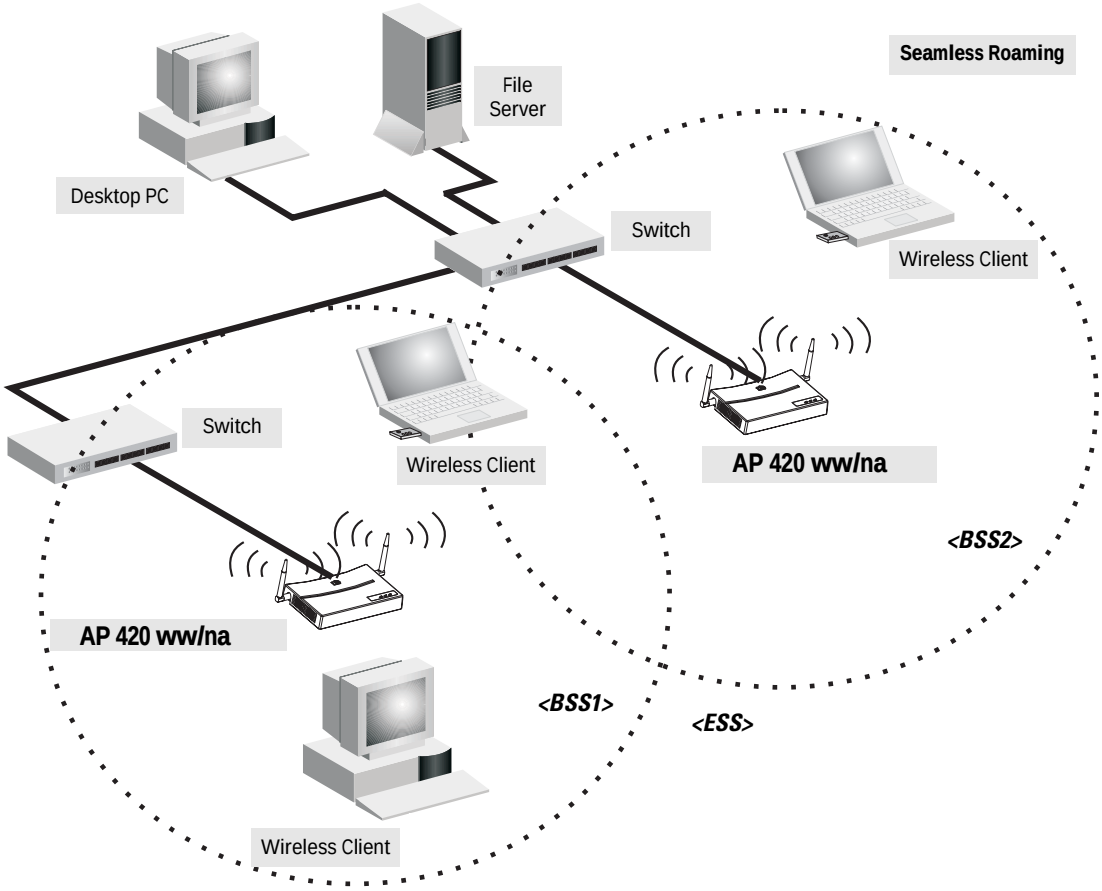

The Basic Service Set (BSS) is the communications domain for each access point and its associated wireless clients. For wireless PCs that do not need to support roaming, set the Service Set Identifier (SSID) for the wireless card to the BSS ID of the access point to which you want to connect.

Check with your administrator for the BSS ID of the access point to which you should connect. A wireless infrastructure can also support roaming for mobile workers. More than one access point can be configured to create an Extended Service Set (ESS). By placing the access points so that a continuous coverage area is created, wireless users within this ESS can roam freely. All HP wireless network cards and adapters and access points within a specific ESS must be configured with the same SSID.

Getting Started With Access Point Configuration

This chapter is a guide for using the access point's console to quickly assign an IP (Internet Protocol) address and subnet mask to the access point, set a Manager password, and, optionally, configure other basic features.

For more information on using the access point's console and the other access point management interfaces: the web browser interface and SNMP management tools, please see the *Management and Configuration Guide,* which is on the Documentation CD-ROM that came with your access point.

Recommended Minimal Configuration

In the factory default configuration, the access point has no IP (Internet Protocol) address and subnet mask, and no passwords. In this state, it can be managed only through a direct console connection. To manage the access point through in-band (networked) access, you should configure the access point with an IP address and subnet mask compatible with your network. Also, you should configure a Manager password to control access privileges from the console and web browser interface. Other parameters can be left at their default settings or you can configure them with values you enter.

Many other features can be configured through the access point's console interface, to optimize the access point's performance, to enhance your control of the network traffic, and to improve network security. Once an IP address has been configured on the access point, these features can be accessed more conveniently through a remote Telnet session, through the access point's web browser interface, and from an SNMP network management station running a network management program. For a listing of access point features available with and without an IP address, refer to "How IP Addressing Affects Access Point Operation" in the *Management and Configuration Guide,* which is on the Documentation CD-ROM that came with your access point.

For more information on IP addressing, refer to "IP Configuration" in the *Management and Configuration Guide.*

Note

By default, the access point is configured to acquire an IP address configuration from a DHCP server. To use DHCP instead of the manual method described in this chapter, see “DHCP Operation” in the *Management and Configuration Guide,* which is on the Documentation CD-ROM that came with your access point.

Using the Command Line Interface

The quickest and easiest way to minimally configure the access point for management and password protection in your network is to use a direct console connection to the access point, start a console session, and access the command line interface (CLI).

1. Using the method described in the preceding chapter, connect a terminal device to the access point, and press [Enter] to initiate the console connection.

2. Enter “admin” for the user name. The default password is null, so just press [Enter] at the password prompt. The CLI prompt appears displaying the access point’s model number.

```
Username: admin
Password:
HP Procurve Access Point wl420#
```

3. Type **configure** to enter global configuration mode.

```
HP Procurve Access Point wl420#configure
Enter configuration commands, one per line. End with CTRL/Z
HP Procurve Access Point wl420(config)#
```

4. Type **username** *username* to create a user name for the Manager, where “*username*” can consist of 3 to 16 alphanumeric characters and is case sensitive.

```
HP Procurve Access Point wl420#configure
Enter configuration commands, one per line. End with CTRL/Z
HP Procurve Access Point wl420(config)#username admin
HP Procurve Access Point wl420(config)#
```

5. Type **password** *password* to create a password for the Manager, where “password” can consist of up to 8 alphanumeric characters and is case sensitive.

```
HP Procurve Access Point wl420#configure
Enter configuration commands, one per line. End with CTRL/Z
HP Procurve Access Point wl420(config)#password [password]
HP Procurve Access Point wl420(config)#
```

6. Type **end** to exit configuration mode, and then enter the **show interface ethernet** command to display the access point's default IP configuration, including IP address, subnet mask, and default gateway. The following illustration shows the default settings.

```
HP Procurve Access Point wl420#show interface ethernet
Ethernet Interface Information
========================================
IP Address          : 0.0.0.0
Subnet Mask         : 255.255.255.0
Default Gateway     : 0.0.0.0
Primary DNS         : 0.0.0.0
Secondary DNS       : 0.0.0.0
Speed-duplex        : 100Base-TX Full Duplex
Admin status        : Up
Operational status  : Up
HP Procurve Access Point wl420#
```

7. Type **configure** to enter configuration mode, then type **interface ethernet** to access the Ethernet interface-configuration mode.

```
HP Procurve Access Point wl420#configure
HP Procurve Access Point wl420(config)#interface ethernet
Enter Ethernet configuration commands, one per line.
HP Procurve Access Point wl420(if-ethernet)#
```

8. Type **ip address** *ip-address netmask gateway*, where "ip-address" is the access point's IP address, "netmask" is the network mask for the network, and "gateway" is the default gateway router. Check with your system administrator to obtain an IP address that is compatible with your network.

```
HP Procurve Access Point wl420(if-ethernet)#ip address 192.168.1.1
   255.255.255.0 192.168.1.254
```

9. Type **exit** to leave configuration mode, then enter the **show interface wireless g** command to display the access point's default wireless configuration, including wireless communication domain, radio channel, and operation status. The following illustration shows the default settings.

```
HP Procurve Access Point wl420(if-ethernet)#exit
HP Procurve Access Point wl420#show interface wireless g

Wireless Interface Information
============================================================
----------------Identification----------------------------
Description                 : Enterprise 802.11g Access Point
SSID                        : Enterprise Wireless AP
Channel                     : 0 (AUTO)
Status                      : Disable
----------------802.11 Parameters-------------------------
Transmit Power              : FULL (17 dBm)
Max Station Data Rate       : 54Mbps
Fragmentation Threshold     : 2346 bytes
RTS Threshold               : 2347 bytes
Beacon Interval             : 100 TUs
DTIM Interval               : 2 beacons
Maximum Association         : 64 stations
----------------Security----------------------------------
Closed System               : DISABLED
Multicast cipher            : WEP
WPA clients                 : SUPPORTED
Encryption                  : DISABLED
Default Transmit Key        : 1
Static Keys :
   Key 2: EMPTY    Key 3: EMPTY    Key 4: EMPTY
Authentication Type         : OPEN
============================================================
HP Procurve Access Point wl420#
```

10. Type **configure** to return to global configuration mode, and then type **interface wireless g** to access the wireless interface-configuration mode.

```
HP Procurve Access Point wl420#configure
HP Procurve Access Point wl420(config)#interface wireless g
HP Procurve Access Point wl420(if-wireless g)#
```

11. Set the Service Set Identifier (SSID) to identify the communications domain for the access point. Type **ssid** *identifier*, where "identifier" can consist of up to 32 alphanumeric characters and is case sensitive.

```
HP Procurve Access Point wl420(if-wireless g)#ssid wl420
HP Procurve Access Point wl420(if-wireless g)#
```

12. Set the radio channel through which the access point communicates with its wireless clients. For most wireless clients, the radio channel is automatically set to the same as that used by the access point to which it is linked. Type **channel** *number*, where "number" can be from 1 to 11, depending on the wireless regulations specified by your country.

```
HP Procurve Access Point wl420(if-wireless g)#channel 9
HP Procurve Access Point wl420(if-wireless g)#
```

13. Type **no shutdown** to enable wireless operation.

```
HP Procurve Access Point wl420(if-wireless g)#no shutdown
HP Procurve Access Point wl420(if-wireless g)#
```

14. Type Ctrl-Z to save your settings.

Here is some information on the basic IP address and wireless configuration parameters. For more information on these fields, see the *Management and Configuration Guide,* which is on the Documentation CD-ROM that came with your access point:

Parameter	Default	
Username	admin	The name of the Manager.
Password	none	The password for the Manager.
IP Address	0.0.0.0	IP address compatible with your network.
Subnet Mask	255.255.255.0	Subnet mask compatible with your network.
Default Gateway	0.0.0.0	IP address of the next-hop gateway node for network traffic that needs to be able to reach off-subnet destinations.
SSID	ANY	The Service Set Identifier is a unique name identifying the communications domain for the access point. Clients that want to connect to the wireless network via this specific access point must set their SSIDs to the same name.
Channel	0 (AUTO)	The radio channel through which the access point communicates with its wireless clients. For most wireless clients, the radio channel is automatically set to the same as that used by the access point to which it is linked.
Wireless Operation	Disabled	Wireless operation should be enabled only after you configure the appropriate SSID and radio channel using the **no shutdown** command.

Note: The IP address and subnet mask assigned for the access point must be compatible with the IP addressing used in your network. For more information on IP addressing, see the *Management and Configuration Guide,* which is on the Documentation CD-ROM that came with your access point.

Where to Go From Here

The above procedure using the CLI configured your access point with a Manager password, IP address, and subnet mask. As a result, with the proper network connections, you can now manage the access point from a PC equipped with Telnet, a web browser interface, or from an SNMP-based network management station. The above procedure also configured the Service Set Identifier (SSID), radio channel, and enabled wireless operation. Your wireless clients can now access the network by setting their SSID and radio channel to the same values used by the access point.

Some basic information on managing your access point is included in the next section. For more information on the console, web browser, and SNMP management interfaces, and all the features that can be configured on the Access Point 420wl, please see the *Management and Configuration Guide,* which is on the Documentation CD-ROM that came with your access point.

To Recover from a Lost Manager Password: If you cannot start a console session because of a lost Manager password, you can clear all passwords and user names by getting physical access to the access point and pressing and holding the Reset button for a full second. However, note that this action will reset all configuration settings to the factory defaults.

Using the IP Address for Remote Access Point Management

With your Access Point 420ww/na, you can use the access point's IP address to manage the access point from any PC that is on the same subnet as the access point. You can use either a Telnet session or a standard web browser to manage the access point.

Starting a Telnet Session

To access the access point through a Telnet session, follow these steps:

1. Make sure the access point is configured with an IP address and that the access point is reachable from the PC that is running the Telnet session (for example, by using a Ping command to the access point's IP address).
2. Start the Telnet program on a PC that is on the same subnet as the access point and connect to the access point's IP address.
3. Enter the user name and password. (The default user name is "admin" and the default password is null. You will then see the access point's console command (CLI) prompt, for example:

```
Username: admin
Password:
HP Procurve Access Point wl420#
```

   Enter **?** to see a list of commands that can be executed at the prompt. Entering any command followed by **?** displays a list of options that are available at that point in the command entry.

Starting a Web Browser Session

Your AP 420 ww/na can be managed through a graphical interface that you can access from any PC or workstation on the network by running your web browser (e.g., Java-enabled Internet Explorer 5.5) and typing in the access point's IP address as the URL. (See "Using the Command Line Interface" on page 3-2 for information on setting the IP address.) No additional software installation is required to make this interface available; it is included in the access point's onboard software.

A typical web browser interface screen is shown in the next illustration.

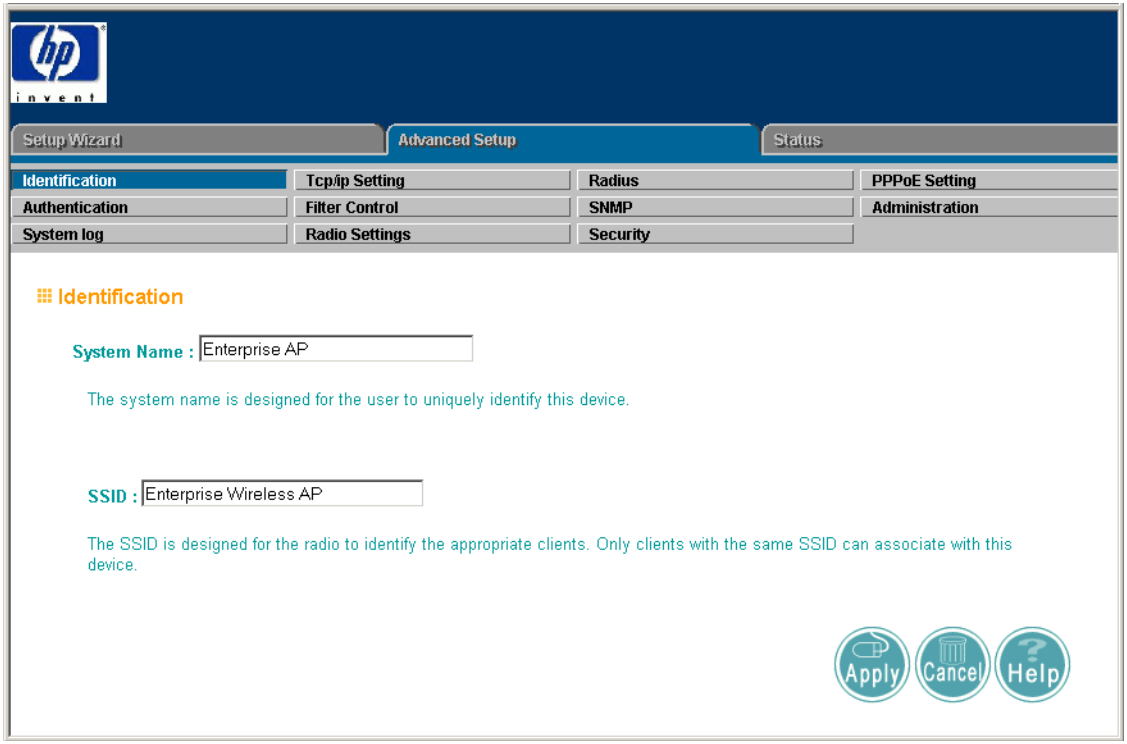

For more information on using the web browser interface, please see the *Management and Configuration Guide,* which is on the Documentation CD-ROM that came with your access point.

An extensive help system is also available for the web browser interface.

Troubleshooting

This chapter describes how to troubleshoot your HP Procurve Access Point 420ww/na. Note that this document describes troubleshooting mostly from a hardware perspective. You can perform more in-depth troubleshooting on the Access Point 420ww/na using the software tools available with the access point, including the full-featured console interface, and the built-in web browser interface, or SNMP-based network management tools. For more information, see the chapter "Troubleshooting" in the *Management and Configuration Guide,* which is on the Documentation CD-ROM that came with your access point.

This chapter describes the following:

- basic troubleshooting tips (page 4-1)
- diagnosing with the LEDs (page 4-3)
- Proactive Networking tools (page 4-5)
- hardware diagnostic tests (page 4-6)
- restoring the factory default configuration (page 4-8)
- downloading new software to the Access Point 420wl (page 4-9)
- HP Customer Support Services (page 4-9)

Basic Troubleshooting Tips

Most problems are caused by the following situations. Check for these items first when starting your troubleshooting:

- **Connecting to devices that have a fixed full-duplex configuration.** The RJ-45 port uses auto-negotiation to determine the duplex mode. That is, when connecting to attached devices, the access point will operate in one of two ways to determine the link speed and the communication mode (half duplex or full duplex):
  - If the connected device is also configured to use auto-negotiation, the access point will automatically negotiate both link speed and communication mode.

- If the connected device has a fixed configuration, for example 100 Mbps, at half or full duplex, the access point will automatically sense the link speed, but will default to a communication mode of *half* duplex.

Because the AP 420 ww/na behaves in this way *(in compliance with the IEEE 802.3 standard)*, if a device connected to the access point has a fixed configuration at *full* duplex, the device will not connect correctly to the access point. The result will be high error rates and very inefficient communications between the access point and the device.

Make sure that all devices connected to the AP 420 ww/na are configured to auto negotiate, or are configured to connect at half duplex (all hubs are configured this way, for example).

- **Faulty or loose cables.** Look for loose or obviously faulty connections. If they appear to be OK, make sure the connections are snug. If that does not correct the problem, try a different cable.
- **Non-standard cables.** Non-standard and miswired cables may cause network collisions and other network problems, and can seriously impair network performance. Use a new correctly-wired cable or compare your cable to the cable in appendix B, “Access Point Port and Network Cables” for pinouts and correct cable wiring. A category 5 cable tester is a recommended tool for every 100Base-TX network installation.
- **Improper Network Topologies.** It is important to make sure you have a valid network topology. Common topology faults include excessive cable length and excessive repeater delays between end nodes. If you have network problems after recent changes to the network, change back to the previous topology. If you no longer experience the problems, the new topology is probably at fault. Sample topologies are shown at the end of chapter 2 in this book, and some topology configuration guidelines can be found online at the HP Procurve web site, *http://www.hp.com/go/hpprocurve*.
- **Mobile users cannot connect to the network.** Make sure that the access point and wireless clients are configured to the same WEP setting, SSID, and authentication algorithm. Check to ensure that the wireless client is within the maximum range supported by the access point. Also verify that the wireless client has been configured with an IP address compatible with the attached network, either manually or via DHCP.

For more information on possible network problems and their solutions, refer to the technical note “Troubleshooting LAN Performance and Intermittent Connectivity Problems”, which can be found on the HP Procurve web site, *http://www.hp.com/go/hpprocurve*, in the Information Library section.

Diagnosing with the LEDs

Table 4-1 shows LED patterns on the access point that indicate problem conditions.

1. Check in the table for the LED pattern that you see on your access point.
2. Refer to the corresponding diagnostic tip on the next few pages.

Table 4-1. LED Error Indicators

LED Pattern Indicating Problems			Diagnostic Tips
Power	**Wireless LED**	**10/100-T LED**	
Off with power cord plugged in	*	*	1
Off without power cord plugged in, but linked to a PoE source	*	*	2
Prolonged Blinking†			3
On	Off	*	4
On	*	Off with cable connected	5
On	*	On, but the port is not communicating	6

*** This LED is not important for the diagnosis.**
† The blinking behavior is an on/off cycle once every 1.6 seconds, approximately.

Diagnostic Tips:

Tip	Problem	Solution
1	The access point is not plugged into an active AC power source, or the access point's power supply may have failed.	1. Verify that the power cord is plugged into an active power source and to the access point. Make sure these connections are snug. 2. Try power cycling the access point by unplugging and plugging the power cord back in. 3. If the Power LED is still not on, verify that the AC power source works by plugging another device into the outlet. Or try plugging the access point into a different outlet or try a different power cord. If the power source and power cord are OK and this condition persists, the access point's power supply may have failed. Call your HP-authorized LAN dealer, or use the electronic support services from HP to get assistance. See the Customer Support/Warranty booklet for more information.

Tip	Problem	Solution
2	The access point is not receiving power from the PoE source.	1. Verify that access point's 10/100Base-T port is attached to a PoE source device. 2. Verify that the PoE source device is powered on, and that the PoE function has been administratively enabled on the source port attached to the access point. 3. Refer to Tip 6 to verify that the network cable is functioning properly.
3	The access point has experienced a software failure during self test.	1. Try resetting the access point by pressing the Reset button on the back of the access point, or by power cycling the access point. 2. If the fault indication reoccurs, attach a console to the access point (as indicated in chapter 2). Then, reset the access point. Messages should appear on the console screen and in the console log identifying the error condition. You can view the console log at that point by using the **show logging** commands. If necessary to resolve the problem, contact your HP-authorized LAN dealer, or use the electronic support services from HP to get assistance. See the Customer Support/ Warranty booklet for more information.
4	Wireless link has been administratively disabled.	Verify that the wireless port has not been disabled through a access point configuration change. You can use the console interface, or, if you have configured an IP address on the access point, use the web browser interface to determine the state of the wireless port and re-enable the port if necessary.
5	The 10/100Base-T network connection is not working properly.	Try the following procedures: • Verify that both ends of the cabling, at the access point and the connected device, are connected properly. • Verify the connected device and access point are both powered *on* and operating correctly. • If the other procedures don't resolve the problem, try using a different cable.
6	The port may be improperly configured.	VLAN configuration may affect the port operation. Use the access point's console to see how the port is configured for VLANs. For software troubleshooting tips, see the chapter "Troubleshooting" in the *Management and Configuration Guide*, which is on the Documentation CD-ROM that came with your access point. Make sure also, that the device at the other end of the connection is indicating a good link to the access point. If it is not, the problem may be with the cabling between the devices or the connectors on the cable.

Proactive Networking

The following interfaces provide tests, indicators, and an event log that can be used to monitor the access point and its network connections and to help you take advantage of these proactive networking features:

- A graphical web browser interface that you can use to manage your access point from a PC running a supported web browser, for example Microsoft Internet Explorer.
- A full-featured easy-to-use console interface that you can access by connecting a standard terminal or PC running a terminal emulator to the access point's console port. The cable to make that connection is provided with your access point. The console interface is also accessible through a Telnet connection.

For more information on using these software tools to diagnose and manage your access point, see the "Troubleshooting" chapter in the *Management and Configuration Guide*, which is on the Documentation CD-ROM that came with your access point.

Hardware Diagnostic Tests

Testing the Access Point by Resetting It

If you believe that the access point is not operating correctly, you can reset the access point to test its circuitry and operating code. To reset an access point, either

- Unplug and plug in the power cord (power cycling)
- Press the Reset button on the back of the switch

Power cycling the access point and pressing the Reset button both cause the access point to perform its power-on self test, which almost always will resolve any temporary operational problems. These reset processes also cause any network traffic counters to be reset to zero, and cause the System Up Time timer to reset to zero.

Checking the Access Point's LEDs

The self test passes if the Power LED on the front of the access point stops blinking after approximately 50 seconds. If this LED continues blinking longer than 60 seconds or goes off, there may be a problem with the access point.

See "Diagnosing with the LEDs" on page 4-3 for information on interpreting the LED patterns.

Checking Console Messages

Useful diagnostic messages may be displayed on the console screen when the access point is reset. As described in chapter 2 under step 7, "Connect a console to the access point", connect a PC running a VT-100 terminal emulator program or a standard VT-100 terminal to the access point's Console Port and configure it to run at 9600 baud, and with the other terminal communication settings shown on page 2-11. Then, when you reset the access point, note the messages that are displayed. Additionally, you can check the access point's event log, which can be accessed from the console using the **show logging** commands.

Testing Twisted-Pair Cabling

Network cables that fail to provide a link or provide an unreliable link between the access point and the connected network device may not be compatible with the IEEE 802.3 Type 10Base-T, or 100Base-TX standards. The twisted-pair cables attached to the Access Point 420wl must be compatible with the appropriate standards. To verify that your cable is compatible with these standards, use a qualified cable test device.

Testing Access Point-to-Device Network Communications

You can perform the following communication tests to verify that the network is operating correctly between the access point and any connected device that can respond correctly to the communication test.

- Link Test -- a physical layer test that sends IEEE 802.2 test packets to any device identified by its MAC address
- Ping Test -- a network layer test used on IP networks that sends test packets to any device identified by its IP address

These tests can be performed through the access point's console interface from a terminal connected to the access point or through a Telnet connection. For more information, see the *Management and Configuration Guide,* which is on the Documentation CD-ROM that came with your access point.

These tests can also be performed from an SNMP network management station running a program that can manage the access point.

Testing End-to-End Network Communications

Both the access point and the cabling can be tested by running an end-to-end communications test -- a test that sends known data from one network device to another through the access point. For example, if you have two PCs on the network between which you can run a Ping test through the access point, you can use this test to verify that the entire communication path between the two PCs is functioning correctly.

Restoring the Factory Default Configuration

As part of your troubleshooting process on the Access Point 420wl, it may become necessary to return the access point's configuration to the factory default settings. This process momentarily interrupts the access point's operation, clears any passwords, clears the console event log, resets the network counters to zero, performs a complete self test, and reboots the access point into its factory default configuration including deleting the IP address, if one is configured.

Note

This process removes all access point configuration changes that you have made from the factory default settings. This includes, for example, IP address, and radio interface settings. Returning the configuration of these features to their factory default settings may result in network connectivity issues.

If the access point has a valid configuration, and you are restoring the factory default settings for a reason other than configuration problems, you should save the access point configuration prior to performing the factory default reset. Then, after the reset and resolution of the original problem, you can restore the saved configuration to the access point. For both the save and restore processes, you can use the console **copy** command. For more information on this command, see the *Management and Configuration Guide,* which is on the Documentation CD-ROM that came with your access point.

You can restore the factory default configuration either on the access point itself, or through the access point console.

To execute the factory default reset on the access point, perform these steps:

1. Using a pointed object, press the Reset buttons on the back of the access point.
2. When the Power LED begins to blink, release the Reset button.

   The access point will then complete its self test and begin operating with its configuration restored to the factory default settings.

To restore the factory default configuration using the console, execute the **delete config** command from the console command prompt.

Downloading New Access Point Software

When product enhancements occur for the AP 420 ww/na, new software can be downloaded to the access point through several methods, for product enhancements and new features. For more information, see the *Management and Configuration Guide,* which is on the Documentation CD-ROM that came with your access point.

The new access point software would be available on the HP Procurve web site, *http://www.hp.com/go/hpprocurve*.

HP Customer Support Services

If you are still having trouble with your access point, Hewlett-Packard offers support 24 hours a day, seven days a week through the use of a number of automated electronic services. See the Customer Support/Warranty booklet that came with your access point for information on how to use these services to get technical support. The HP Procurve web site, *http://www.hp.com/go/hpprocurve* also provides up-to-date support information.

Additionally, your HP-authorized network reseller can provide you with assistance, both with services that they offer and with services offered by HP.

Before Calling Support

Before calling your networking dealer or HP Support, to make the support process most efficient, you first should have retrieved the following information:

Information Item	Information Location
• product identification	the front of the access point, AP 420 na (HP J8130A)
• details about the access point's status including the software (OS) version, a copy of the access point configuration, a copy of the access point Event Log, and a copy of the access point status and counters information	access point console: **show version**, and **show logging** command

Information Item	Information Location
• copy of your network topology map, including network addresses assigned to the relevant devices	your network records

Specifications

Physical

Width:	21.832 cm (8.595 in)
Depth:	13.727 cm (5.404 in)
Height:	3.27 cm (1.287 in)
Weight:	0.8 kg (1.762 lbs)

Electrical

Adapter:	
AC voltage:	100-240 volts, 0.4A, 50/60 Hz
DC voltage:	3.3 volts, 4A
Power consumption:	13.2 watts

PoE (DC)	
Input voltage:	48 volts, 0.27A, 12.96 watts

Note: Power can also be provided to the access point through the Ethernet port based on IEEE 802.3af Power over Ethernet (PoE) specifications. When both PoE is provided and the adapter is plugged in, PoE will be turned off.

Environmental

	Operating	**Non-Operating**
Temperature:	0°C to 55°C (32°F to 131°F)	-40°C to 70°C (-40°F to 158°F)
Relative humidity: (non-condensing)	15% to 95% at 40°C (104°F)	90% maximum at 65°C (149°F)
Maximum altitude:	4.6 Km (15,000 ft)	4.6 Km (15,000 ft)

Acoustic ?

Geraeuschemission LwA=48 dB am fiktiven Arbeitsplatz nach DIN 45635 T.19

Noise Emission LwA=48 dB at virtual workspace according to DIN 45635 T.19

Connectors

- The 10/100 Mbps RJ-45 twisted-pair port is compatible with the IEEE 802.3u 100Base-TX and IEEE 802.3 Type 10Base-T standards.

  Note: To provide Power over Ethernet to the access point, all 4 pairs of wires must be connected for any network cable attached to this port

Safety

Complies with:

- LVD/EN 60950

EMC Compliance (Class B)

Complies with:

- FCC Part 15.107
- ICES-003 (Canada)
- VCCI

Radio Signal Certification

Complies with:

- FCC Part 15.247 (2.4GHz)
- RSS-210 (Canada)
- EN 300.328
- MPT RCR std.33 (D33 1~13 Channel, T66 Channel 14)

Immunity

- EN 301.489-1
- EN 301.489-17

Wireless

Radio Standard:	IEEE 802.11b/g
Radio Technology:	Direct Sequence Spread Spectrum (DSSS), Orthogonal Frequency Division Multiplexing (OFDM)
Data Rate:	1, 2, 5.5, 6, 9, 11, 12, 18, 24, 36, 48, 54 Mbps per channel
Operating Frequency:	2.4 ~ 2.4835 GHz (US, Canada, ETSI) 2.4 ~ 2.497 GHz (Japan)
Maximum Channels:	FCC/IC: 1-11, ETSI: 1-13, MKK: 1-14
Modulation Type:	BPSK, QPSK, 16QAM, 64QAM / OFDM, BPSK, QPSK, CCK / DSSS
Media Access Protocol:	CSMA/CA with ACK
Operating Range:	Up to 350 m (1148 ft)

Transmit Power

Output Power 20(dBm)

Access Point Port and Network Cables

This appendix includes access point connector information and network cable information for cables that should be used with the AP 420 ww/na, including minimum pin-out information and specifications for twisted-pair cables.

Note

Incorrectly wired cabling is the most common cause of problems for LAN communications. HP recommends that you work with a qualified LAN cable installer for assistance with your cabling requirements.

Access Point Ports

The fixed RJ-45 10/100Base-TX port on the access point accepts 100-ohm unshielded and shielded twisted-pair cable with RJ-45 connectors as described on the next page.

Twisted-Pair Cables

10 Mbps Operation	Category 3, 4, or 5 100-ohm unshielded twisted-pair (UTP) or shielded twisted-pair (STP) cable, complying with IEEE 802.3 Type 10Base-T specifications, fitted with RJ-45 connectors
100 Mbps Operation	Category 5 100-ohm UTP or STP cable, complying with IEEE 802.3u 100Base-TX specifications, fitted with RJ-45 connectors

Twisted-Pair Cable/Connector Pin-Outs

The access point includes one 10/100Base-TX port. This port uses MDI (i.e., internal straight-through) pin configuration. You can therefore use “straight-through” twisted-pair cable to connect this port to most network interconnection device such as switch or router that provide MDI-X ports. However, if you need to connect the access point to a workstation or other device that only has MDI ports, then use “crossover” twisted-pair cable.

Ports on most HP switches have the “HP Auto MDIX” feature, which means that you can use either straight-through or crossover twisted-pair cables to connect the access point to the switch.

Other Wiring Rules:

- All twisted-pair wires used for 10 Mbps, and 100 Mbps operation must be twisted through the entire length of the cable. The wiring sequence must conform to EIA/TIA 568-B (not USOC). See “Twisted-Pair Cable Pin Assignments” later in this appendix for a listing of the signals used on each pin.
- For 10 Mbps connections to the ports, you can use Category 3, 4, or 5 unshielded twisted-pair cable, as supported by the IEEE 802.3 Type 10Base-T standard.
- For 100 Mbps connections to the ports, use 100-ohm Category 5 UTP or STP cable only, as supported by the IEEE 802.3u Type 100Base-TX standard.
- To provide Power over Ethernet to the access point, all 4 pairs must be connected for any network cable attached to this port.

Straight-Through Twisted-Pair Cable for 10 Mbps or 100 Mbps Network Connections

Because the 10/100 port on the access point uses an MDI pin configuration, you must use “straight-through” cable for network connections to hubs or switches that only have MDI-X ports. However, if the device to which you are connecting supports auto-MDIX operation, you can use either “straight-through” or “crossover” cable.

Cable Diagram

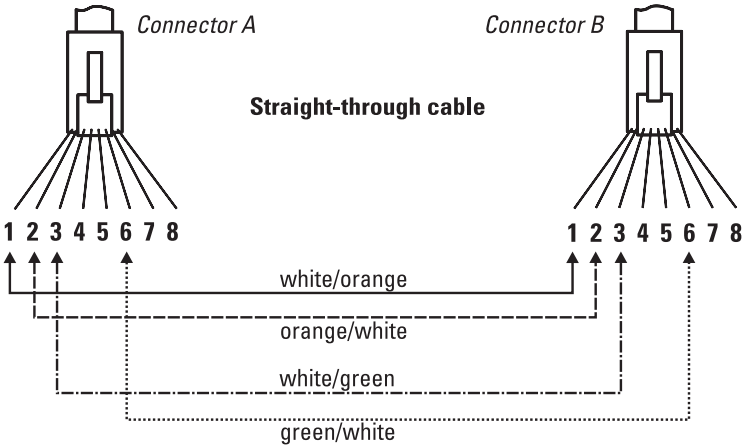

Note

Pins 1 and 2 on connector “A” *must* be wired as a twisted pair to pins 1 and 2 on connector “B”.
Pins 3 and 6 on connector “A” *must* be wired as a twisted pair to pins 3 and 6 on connector “B”.
Pins 4, 5, 7, and 8 are not used for transmitting or receiving data, although they must be wired straight-through in the cable to support Power over Ethernet.

Pin Assignments

Access Point End (MDI)		Hub or Switch Port, or Other MDI-X Port End	
Signal	**Pins**	**Pins**	**Signal**
receive +	1 ←	1	transmit +
receive -	2 ←	2	transmit -
transmit +	3 →	3	receive +
transmit -	6 →	6	receive -

Crossover Twisted-Pair Cable for 10 Mbps or 100 Mbps Network Connection

Because the 10/100 port on the access point uses an MDI pin configuration, you must use “crossover” cable for network connections to PCs, servers or other end nodes that only have MDI ports. However, if the device to which you are connecting supports auto-MDIX operation, you can use either “straight-through” or “crossover” cable.

Cable Diagram

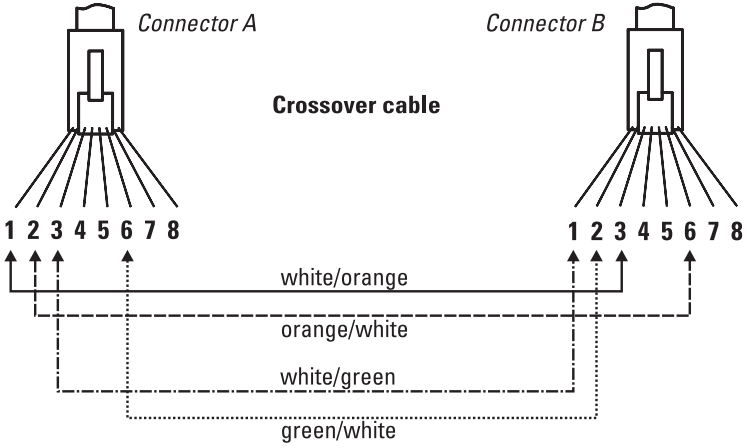

Note

Pins 1 and 2 on connector “A” *must* be wired as a twisted pair to pins 3 and 6 on connector “B”.
Pins 3 and 6 on connector “A” *must* be wired as a twisted pair to pins 1 and 2 on connector “B”.
Pins 4, 5, 7, and 8 are not used for transmitting or receiving data, although they must be wired straight-through in the cable to support Power over Ethernet.

Pin Assignments

Access Point End (MDI)		**Computer, Transceiver, or Other MDI Port End**	
Signal	**Pins**	**Pins**	**Signal**
receive +	1	6	transmit -
receive -	2	3	transmit +
transmit +	3	2	receive -
transmit -	6	1	receive +

Safety and EMC Regulatory Statements

Safety Information

⚠	Documentation reference symbol. If the product is marked with this symbol, refer to the product documentation to get more information about the product.
WARNING	A WARNING in the manual denotes a hazard that can cause injury or death.
CAUTION	A CAUTION in the manual denotes a hazard that can damage equipment.
	Do not proceed beyond a WARNING or CAUTION notice until you have understood the hazardous conditions and have taken appropriate steps.

Grounding

These are safety class I products and have protective earthing terminals. There must be an uninterruptible safety earth ground from the main power source to the product's input wiring terminals, power cord, or supplied power cord set. Whenever it is likely that the protection has been impaired, disconnect the power cord until the ground has been restored.

For LAN cable grounding:

- If your LAN covers an area served by more than one power distribution system, be sure their safety grounds are securely interconnected.
- LAN cables may occasionally be subject to hazardous transient voltages (such as lightning or disturbances in the electrical utilities power grid). Handle exposed metal components of the network with caution.

Servicing

There are no user-serviceable parts inside these products. Any servicing, adjustment, maintenance, or repair must be performed only by service-trained personnel.

These products do not have a power switch; they are powered on when the power cord is plugged in.

Informations concernant la sécurité

⚠	Symbole de référence à la documentation. Si le produit est marqué de ce symbole, reportez-vous à la documentation du produit afin d'obtenir des informations plus détaillées.
WARNING	Dans la documentation, un WARNING indique un danger susceptible d'entraîner des dommages corporels ou la mort.
CAUTION	Un texte de mise en garde intitulé CAUTION indique un danger susceptible de causer des dommages à l'équipement.
	Ne continuez pas au-delà d'une rubrique WARNING ou CAUTION avant d'avoir bien compris les conditions présentant un danger et pris les mesures appropriées.

Cet appareil est un produit de classe I et possède une borne de mise à la terre. La source d'alimentation principale doit être munie d'une prise de terre de sécurité installée aux bornes du câblage d'entrée, sur le cordon d'alimentation ou le cordon de raccordement fourni avec le produit. Lorsque cette protection semble avoir été endommagée, débrancher le cordon d'alimentation jusqu'à ce que la mise à la terre ait été réparée.

Mise à la terre du câble de réseau local:

- si votre réseau local s'étend sur une zone desservie par plus d'un système de distribution de puissance, assurez-vous que les prises de terre de sécurité soient convenablement interconnectées.
- Les câbles de réseaux locaux peuvent occasionnellement être soumis à des surtensions transitoires dangereuses (telles que la foudre ou des perturbations dans le réseau d'alimentation public). Manipulez les composants métalliques du réseau avec précautions.

Aucune pièce contenue à l'intérieur de ce produit ne peut être réparée par l'utilisateur. Tout dépannage, réglage, entretien ou réparation devra être confié exclusivement à un personnel qualifié.

Cet appareil ne comporte pas de commutateur principal ; la mise sous tension est effectuée par branchement du cordon d'alimentation.

Hinweise zur Sicherheit

!	Symbol für Dokumentationsverweis. Wenn das Produkt mit diesem Symbol markiert ist, schlagen Sie bitte in der Produktdokumentation nach, um mehr Informationen über das Produkt zu erhalten.
WARNING	Eine WARNING in der Dokumentation symbolisiert eine Gefahr, die Verletzungen oder sogar Todesfälle verursachen kann.
CAUTION	CAUTION in der Dokumentation symbolisiert eine Gefahr, die dis Gerät beschädigen kann.
	Fahren Sie nach dem Hinweis WARNING oder CAUTION erst fort, nachdem Sie den Gefahrenzustand verstanden und die entsprechenden Maßnahmen ergriffen haben.

Dies ist ein Gerät der Sicherheitsklasse I und verfügt über einen schützenden Erdungsterminal. Der Betrieb des Geräts erfordert eine ununterbrochene Sicherheitserdung von der Hauptstromquelle zu den Geräteingabeterminals, den Netzkabeln oder dem mit Strom belieferten Netzkabelsatz voraus. Sobald Grund zur Annahme besteht, daß der Schutz beeinträchtigt worden ist, das Netzkabel aus der Wandsteckdose herausziehen, bis die Erdung wiederhergestellt ist.

Für LAN-Kabelerdung:

- Wenn Ihr LAN ein Gebiet umfaßt, das von mehr als einem Stromverteilungssystem beliefert wird, müssen Sie sich vergewissern, daß die Sicherheitserdungen fest untereinander verbunden sind.
- LAN-Kabel können gelegentlich gefährlichen Übergangsspannungen ausgesetzt werden (beispielsweise durch Blitz oder Störungen in dem Starkstromnetz des Elektrizitätswerks). Bei der Handhabung exponierter Metallbestandteile des Netzwerkes Vorsicht walten lassen.

Dieses Gerät enthält innen keine durch den Benutzer zu wartenden Teile. Wartungs-, Anpassungs-, Instandhaltungs- oder Reparaturarbeiten dürfen nur von geschultem Bedienungspersonal durchgeführt werden.

Dieses Gerät hat keinen Netzschalter; es wird beim Anschließen des Netzkabels eingeschaltet.

Considerazioni sulla sicurezza

!	Simbolo di riferimento alla documentazione. Se il prodotto è contrassegnato da questo simbolo, fare riferimento alla documentazione sul prodotto per ulteriori informazioni su di esso.
WARNING	La dicitura WARNINGdenota un pericolo che può causare lesioni o morte.
CAUTION	La dicituraCAUTION denota un pericolo che può danneggiare le attrezzature.
	Non procedere oltre un avviso di WARNING o di CAUTIONprima di aver compreso le condizioni di rischio e aver provveduto alle misure del caso.

Questo prodotto è omologato nella classe di sicurezza I ed ha un terminale protettivo di collegamento a terra. Dev'essere installato un collegamento a terra di sicurezza, non interrompibile che vada dalla fonte d'alimentazione principale ai terminali d'entrata, al cavo d'alimentazione oppure al set cavo d'alimentazione fornito con il prodotto. Ogniqualvolta vi sia probabilità di danneggiamento della protezione, disinserite il cavo d'alimentazione fino a quando il collegaento a terra non sia stato ripristinato.

Per la messa a terra dei cavi LAN:

- se la vostra LAN copre un'area servita da più di un sistema di distribuzione elettrica, accertatevi che i collegamenti a terra di sicurezza siano ben collegati fra loro;
- i cavi LAN possono occasionalmente andare soggetti a pericolose tensioni transitorie (ad esempio, provocate da lampi o disturbi nella griglia d'alimentazione della società elettrica); siate cauti nel toccare parti esposte in metallo della rete.

Nessun componente di questo prodotto può essere riparato dall'utente. Qualsiasi lavoro di riparazione, messa a punto, manutenzione o assistenza va effettuato esclusivamente da personale specializzato.

Questo apparato non possiede un commutatore principale; si mette scotto tensione all'inserirsi il cavo d'alimentazione.

Consideraciones sobre seguridad

!	Símbolo de referencia a la documentación. Si el producto va marcado con este símbolo, consultar la documentación del producto a fin de obtener mayor información sobre el producto.
WARNING	Una WARNING en la documentación señala un riesgo que podría resultar en lesiones o la muerte.
CAUTION	Una CAUTION en la documentación señala un riesgo que podría resultar en averías al equipo.
	No proseguir después de un símbolo de WARNING o CAUTION hasta no haber entendido las condiciones peligrosas y haber tomado las medidas apropiadas.

Este aparato se enmarca dentro de la clase I de seguridad y se encuentra protegido por una borna de puesta a tierra. Es preciso que exista una puesta a tierra continua desde la toma de alimentación eléctrica hasta las bornas de los cables de entrada del aparato, el cable de alimentación o el juego de cable de alimentación suministrado. Si existe la probabilidad de que la protección a tierra haya sufrido desperfectos, desenchufar el cable de alimentación hasta haberse subsanado el problema.

Puesta a tierra del cable de la red local (LAN):

- Si la LAN abarca un área cuyo suministro eléctrico proviene de más de una red de distribución de electricidad, cerciorarse de que las puestas a tierra estén conectadas entre sí de modo seguro.
- Es posible que los cables de la LAN se vean sometidos de vez en cuando a voltajes momentáneos que entrañen peligro (rayos o alteraciones en la red de energía eléctrica). Manejar con precaución los componentes de metal de la LAN que estén al descubierto.

Este aparato no contiene pieza alguna susceptible de reparación por parte del usuario. Todas las reparaciones, ajustes o servicio de mantenimiento debe realizarlos solamente el técnico.

Este producto no tiene interruptor de potencia; se activa cuando se enchufa el cable de alimentación.

Safety Information (Japan)

安全性の考慮

安全記号

⚠ マニュアル参照記号。製品にこの記号がついている場合はマニュアルを参照し、注意事項等をご確認ください。

WARNING　マニュアル中の「WARNING」は人身事故の原因となる危険を示します。

CAUTION　マニュアル中の「CAUTION」は装置破損の原因となる危険を示します。

「WARNING」や「CAUTION」の項は飛ばさないで必ずお読みください。危険性に関する記載事項をよく読み、正しい手順に従った上で次の事項に進んでください。

これは安全性クラス I の製品で保護用接地端子を備えています。主電源から製品の入力配線端子、電源コード、または添付の電源コード・セットまでの間、切れ目のない安全接地が存在することが必要です。もしこの保護回路が損なわれたことが推測されるときは、接地が修復されるまで電源コードを外しておいてください。

LAN ケーブルの接地に関して:

- もし貴社の LAN が複数の配電システムにより電力を受けている領域をカバーしている場合には、それらのシステムの安全接地が確実に相互に結合されていることを確認してください。
- LAN ケーブルは時として危険な過度電圧（例えば雷や、配電設備の電力網での障害）にさらされることがあります。露出した金属部分の取扱いには十分な注意をはらってください。

本製品の内部にはユーザーが修理できる部品はありません。サービス、調整、保守および修理はサービス訓練を受けた専門家におまかせください。

Safety Information (China)

HP 网络产品使用安全手册

使用须知

欢迎使用惠普网络产品，为了您及仪器的安全，请您务必注意如下事项:

1. 仪器要和地线相接，要使用有正确接地插头的电源线，使用中国国家规定 的220V 电源。
2. 避免高温和尘土多的地方，否则易引起仪器内部部件的损坏。
3. 避免接近高温，避免接近直接热源，如直射太阳光、暖气等其它发热体。
4. 不要有异物或液体落入机内，以免部件短路。
5. 不要将磁体放置于仪器附近。

警告

为防止火灾或触电事故，请不要将该机放置于淋雨或潮湿处。

安 装

安装辅助管理模块，请参看安装指南。

保修及技术支持

如果您按照以上步骤操作时遇到了困难，或想了解其它产品性能，请按以下 方式与我们联络。

如是硬件故障:

1. 与售出单位或当地维修机构联系。
2. 中国惠普有限公司维修中心地址:
   北京市海淀区知春路49号希格玛大厦
   联系电话: 010-62623888 转 6101
   邮政编码: 100080

如是软件问题:

1. 惠普用户响应中心热线电话: 010-65645959
2. 传真自动回复系统: 010-65645735

EMC Regulatory Statements

U.S.A.

FCC Class B

This equipment has been tested and found to comply with the limits for a Class B digital device, pursuant to Part 15 of the FCC Rules. These limits are designed to provide reasonable protection against harmful interference in a residential installation. This equipment generates, uses and can radiate radio frequency energy and, if not installed and used in accordance with instructions, may cause harmful interference to radio communications. However, there is no guarantee that the interference will not occur in a particular installation. If this equipment does cause harmful interference to radio or television reception, which can be determined by turning the equipment off and on, the user is encouraged to try to correct the interference by one or more of the following measures:

- Reorient the receiving antenna
- Increase the separation between the equipment and receiver
- Connect the equipment into an outlet on a circuit different from that to which the receiver is connected
- Consult the dealer or an experienced radio/TV technician for help

FCC Caution: To assure continued compliance, (example - use only shielded interface cables when connecting to a computer or peripheral devices). Any changes or modifications not expressly approved by the party responsible for compliance could void the user's authority to operate this equipment.

This device complies with Part 15 of the FCC Rules. Operation is subject to the following two conditions: (1) This device may not cause harmful interference, and (2) this device must accept any interference received, including interference that may cause undesired operation.

IMPORTANT NOTE:
FCC Radiation Exposure Statement

This equipment complies with FCC radiation exposure limits set forth for an uncontrolled environment. This equipment should be installed and operated with a minimum distance of 20 centimeters (8 inches) between the radiator and your body. This transmitter must not be co-located or operating in conjunction with any other antenna or transmitter.

Canada

This digital apparatus does not exceed the Class B limits for radio noise emissions from digital apparatus as set out in the interference-causing equipment standard entitled “Digital Apparatus,” ICES-003 of the Department of Communications.

Cet appareil numérique respecte les limites de bruits radioélectriques applicables aux appareils numériques de Classe B prescrites dans la norme sur le matériel brouilleur: “Appareils Numériques,” NMB-003 édictée par le ministère des Communications.

European Community

DECLARATION OF CONFORMITY

according to ISO/IEC Guide 22 and EN45014

Manufacturer's Name: Hewlett-Packard Company

Manufacturer's Address: 8000 Foothills Blvd
Roseville, CA 95747-5502
U.S.A.

declares that the product:

Product Name: HP Procurve Switch 2650

Model Number: J4899A

Accessories: J4858A, J4859A, J4860A

Regulatory Model Number: RSVLC-0204

conforms to the following Product Specifications:

Safety: EN60950 (1992) +A1,A2,A3,A4,A11 / IEC 950 (1991) +A1,A2,A3,A4
EN60825-1 (1994) +A11 (1996) / IEC 825-1 (1993), Class 1

EMC: EN 55022 (1998) / CISPR-22 (1997) Class A
EN55024 (1998) / CISPR-24 (1997)
EN 61000-3-2 (2000) / IEC 61000-3-2 (2000) Harmonics
EN 61000-3-3 (1995) / IEC 61000-3-3 (1994) Flicker

Supplementary Information:

The product herewith complies with the requirements of the Low Voltage Directive 73/23/EEC and the EMC Directive 89/336/EEC and carries the CE marking accordingly.

Tested with Hewlett-Packard Co. products only.

Roseville, September 26, 2002

Mike Avery,
Regulatory Engineering Manager

European Contact: Your local Hewlett-Packard Sales and Service Office or Hewlett-Packard GmbH, Department TRE, Herrenberger Strasse 140, D-71034 Böblingen (FAX:+49-7031-14-3143).

Index

Numerics

10/100Base-TX
- connections, length limitations … 2-4
- ports, cables used with … 2-4

10/100Base-TX port
- location on access point … 1-5

10/100-T LED … 1-4
- behaviors … 1-4

A

access point
- connecting to a power source … 2-9
- description … 1-1
- downloading new software … 4-9
- electrical specifications … A-1
- emmissions specifications … A-2
- environmental specifications … A-1
- features … 1-8
- included parts … 2-1
- LED descriptions … 1-3
- mounting on a wall … 2-7
- mounting on horizontal surface … 2-9
- physical specifications … A-1
- top panel description … 1-3

access point operation
- verifying after installation … 2-5

antennas
- location on access point … 1-5

auto MDI/MDI-X operation … B-3

B

back of access point
- 10/100Base-TX port … 1-5
- console port … 1-6
- description … 1-5
- lock … 1-5
- network port … 1-6
- power connector … 1-6

basic access point configuration
- command line interface … 3-2

basic troubleshooting tips … 4-1

blinking LEDs
- error indications … 4-3

buttons
- Reset button … 1-7

C

cables
- 10/100Base-TX connections … 2-4
- connecting cables to the access point port … 2-10
- effects of non-standard cables … 4-2
- infrastructure requirements … 2-4
- length limitations … 2-4
- required types … 2-4
- serial, for direct console connection … 2-12

cables, twisted pair
- access point-to-computer connection … B-3
- access point-to-switch or hub connection … B-4
- category 3, 4, 5 … B-2
- cross-over cable pin-out … B-4
- MDI-X to MDI connections … B-3
- MDI-X to MDI-X connections … B-4
- pin-outs … B-3
- straight-through cable pin-out … B-3

cables, twisted-pair
- wiring rules … B-2

cables, twisted-pair connector pin-outs … B-2

cabling infrastructure … 2-4

CLI prompt, console
- displaying … 2-12

command line interface
- key command descriptions … 3-5

configuration
- command line interface … 3-2
- DHCP … 3-2
- IP address, manually … 3-2
- restoring factory defaults … 1-7, 4-8

connecting the access point to a power source … 2-9

connector specifications … A-2

console
checking messages during troubleshooting … 4-6
command line interface … 3-2
displaying the CLI prompt … 2-12
features … 2-11
how to connect in-band … 2-11
how to connect out-of-band … 2-11
serial cable connection … 2-12
Telnet access … 3-7
terminal configuration … 2-11
console port
location on access point … 1-5–1-6
cross-over cable
pin-out … B-4

D

DC power connector
location on back of access point … 1-5
description
access point … 1-1
back of access point … 1-5
LEDs … 1-3
top of access point … 1-3
DHCP
automatic access point configuration … 3-2
for in-band access … 2-11
diagnostic tests … 4-6
checking the console messages … 4-6
checking the LEDs … 4-6
end-to-end connectivity … 4-7
testing the access point only … 4-6
testing twisted-pair cabling … 4-7
downloading new access point software … 4-9

E

electrical specifications, access point … A-1
EMC regulatory statements … C-8
emmissions specifications, access point … A-2
environmental specifications, access point … A-1

F

factory default configuration, restoring … 1-7, 4-8
features
access point … 1-8
console … 2-11
front of access point
Reset button … 1-7
full-duplex fixed configuration
effects on network connections … 4-1

H

horizontal surface
mounting access point on … 2-9

I

in-band … 3-1
in-band console access
types of … 2-11
included parts … 2-1
installation
connecting the access point to a power source … 2-9
horizontal surface mounting … 2-9
location considerations … 2-4
network cable requirements … 2-4
precautions … 2-3
site preparation … 2-4
summary of steps … 2-2
wall mounting … 2-7

L

LEDs
10/100-T … 1-4
behavior during self test … 2-6
blinking definition … 1-4
checking during troubleshooting … 4-6
descriptions of … 1-3
error indications … 4-3
location on access point … 1-3
on access point … 1-3
Power … 1-3
behavior during self test … 2-6
Self Test
behavior during self test … 2-6
Wireless … 1-4
length limitations
10/100Base-TX connections … 2-4

Index

link test … 4-7
location for the access point, considerations … 2-4
lock
    location on access point … 1-5

M

MDI-X to MDI network cable … B-3
MDI-X to MDI-X network cable … B-4
mounting the access point
    on a horizontal surface … 2-9
    on a wall … 2-7
        precautions … 2-7

N

network cables
    10/100Base-TX connections … 2-4
    required types … 2-4
    twisted-pair connector pin-outs … B-2
    twisted-pair, wiring rules … B-2
network devices
    connecting to the access point … 2-10
network ports
    connecting to … 2-10
    location on access point … 1-6
    standards compliance … A-2
    types of … 2-4
non-standard network cables, effects … 4-2

O

out-of-band console access … 3-7

P

parts, included with the access point … 2-1
passwords
    deleting with the Reset button … 3-6
    if you lose the password … 3-6
physical specifications, access point … A-1
Ping test … 4-7
pin-outs
    twisted-pair cables … B-2
PoE power connector
    location on back of access point … 1-5
port LEDs
    normal operation … 2-6
ports
    10/100Base-TX, location on access point … 1-5
    connecting to … 2-10
    console … 2-11
    network connections … 2-10
power connector … 1-6
Power LED … 1-3
    behavior during factory default reset … 4-8
    behavior during self test … 2-6
    behaviors … 1-3
    location on access point … 1-3
power source
    connecting the access point to … 2-9
precautions
    mounting the access point … 2-3
    power requirements … 2-3
preparing the installation site … 2-4
Proactive Network tools
    diagnostics with … 4-5

R

regulatory statements … C-8
Reset button
    description … 1-7
    location on access point … 1-7
    restoring factory default configuration … 1-7
    to delete password protection … 3-6
resetting the access point
    factory default reset … 4-8
    location of Reset button … 1-7
    troubleshooting procedure … 4-6

S

safety and regulatory statements … C-1
safety specifications … A-2
self test
    LED behavior during … 2-6
    Power LED behavior … 2-6
Self Test LED
    behavior during self test … 2-6
serial cable
    for direct console connection … 2-12
sides of access point
    antennas … 1-5

specifications
connectors … A-2
electrical … A-1
emmissions … A-2
environmental … A-1
physical … A-1
safety … A-2
wireless … A-3
straight-through cable
pin-out … B-3
summary
of access point installation … 2-2
of cables used with the access point … 2-4

T

Telnet access to the console … 3-7
terminal configuration … 2-11
testing
access point operation … 4-6
access point-to-device communications … 4-7
checking the console messages … 4-6
checking the LEDs … 4-6
diagnostic tests … 4-6
end-to-end communications … 4-7
link test … 4-7
Ping test … 4-7
twisted-pair cabling … 4-7
tips for troubleshooting … 4-1
top of access point … 1-3
description … 1-3
LEDs … 1-3
topologies
effects of improper topology … 4-2
samples of … 2-13
troubleshooting … 4-1
basic tips … 4-1
checking the console messages … 4-6
checking the LEDs … 4-6
common network problems … 4-1
connecting to fixed full-duplex devices … 4-1
diagnostic tests … 4-6
effects of improper topology … 4-2
effects of non-standard cables … 4-2
link test … 4-7
Ping test … 4-7
Proactive Network tools … 4-5
restoring factory default configuration … 4-8
testing connections to other devices … 4-7
testing end-to-end communications … 4-7
testing the access point … 4-6
testing the twisted-pair cables … 4-7
twisted-pair cable
access point-to-computer connection … B-3
access point-to-switch or hub connection … B-4
cross-over cable pin-out … B-4
pin-outs … B-2–B-3
straight-through cable pin-out … B-3
testing … 4-7

V

VT-100 terminal
serial cable connection for … 2-12

W

wall
mounting access point on … 2-7
wireless infrastructure
topology with … 2-14
wireless infrastructure for roaming clients
topology with … 2-15
Wireless LED … 1-4
behaviors … 1-4
wireless specifications … A-3
wiring rules for twisted-pair cables … B-2