Appendix C

Phantom Description

Schmid & Partner Engineering AG

s p e a g

Zeughausstrasse 43, 8004 Zurich, Switzerland
Phone +41 44 245 9700, Fax +41 44 245 9779
info@speag.com, http://www.speag.com

Certificate of Conformity / First Article Inspection

Item	Oval Flat Phantom ELI 5.0
Type No	QD OVA 002 A
Series No	1108 and higher
Manufacturer	Untersee Composites Knebelstrasse 8, CH-8268 Mannenbach, Switzerland

Tests
Complete tests were made on the prototype units QD OVA 001 A, pre-series units QD OVA 001 B as well as on some series units QD OVA 001 B. Some tests are made on all series units QD OVA 002 A.

Test	Requirement	Details	Units tested
Shape	Internal dimensions, depth and sagging are compatible with standards	Bottom elliptical 600 x 400 mm, Depth 190 mm, dimension compliant with [1] for f > 375 MHz	Prototypes
Material thickness	Bottom: 2.0mm +/- 0.2mm	dimension compliant with [3] for f > 800 MHz	all
Material parameters	rel. permittivity 2 – 5, loss tangent ≤ 0.05, at f ≤ 6 GHz	rel. permittivity 3.5 +/- 0.5 loss tangent ≤ 0.05	Material samples
Material resistivity	Compatibility with tissue simulating liquids .	Compatible with SPEAG liquids. **	Phantoms, Material sample
Sagging	Sagging of the flat section in tolerance when filled with tissue simulating liquid.	within tolerance for filling height up to 155 mm	Prototypes, samples

** Note: Compatibility restrictions apply certain liquid components mentioned in the standard, containing e.g. DGBE, DGMHE or Triton X-100. Observe technical note on material compatibility.

Standards
[1] OET Bulletin 65, Supplement C, "Evaluating Compliance with FCC Guidelines for Human Exposure to Radiofrequency Electromagnetic Fields", Edition 01-01
[2] IEEE 1528-2003, "Recommended Practice for Determining the Peak Spatial-Average Specific Absorption Rate (SAR) in the Human Head from Wireless Communications Devices: Measurement Techniques, December 2003
[3] IEC 62209–1 ed1.0, "Human exposure to radio frequency fields from hand-held and body-mounted wireless communication devices - Human models, instrumentation, and procedures - Part 1: Procedure to determine the specific absorption rate (SAR) for hand-held devices used in close proximity to the ear (frequency range of 300 MHz to 3 GHz)", 2005-02-18
[4] IEC 62209–2 ed1.0, "Human exposure to radio frequency fields from hand-held and body-mounted wireless communication devices - Human models, instrumentation, and procedures - Part 2: Procedure to determine the specific absorption rate (SAR) for wireless communication devices used in close proximity to the human body (frequency range of 30 MHz to 6 GHz)", 2010-03-30

Conformity
Based on the sample tests above, we certify that this item is in compliance with the uncertainty requirements of **body-worn** SAR measurements and system performance checks as specified in [1 – 4] and further standards.

Date 25.7.2011

Signature / Stamp

s p e a g
Schmid & Partner Engineering AG
Zeughausstrasse 43, 8004 Zurich, Switzerland
Phone +41 44 245 9700, Fax +41 44 245 9779
info@speag.com, http://www.speag.com

Unless otherwise stated the results shown in this test report refer only to the sample(s) tested and such sample(s) are retained for 90 days only.
除非另有說明，此報告結果僅對測試之樣品負責，同時此樣品僅保留90天。本報告未經本公司書面許可，不可部份複製。
This document is issued by the Company subject to its General Conditions of Service printed overleaf, available on request or accessible at http://www.sgs.com.tw/Terms-and-Conditions and for electronic format documents, subject to Terms and Conditions for Electronic Documents at http://www.sgs.com.tw/Terms-and-Conditions. Attention is drawn to the limitation of liability, indemnification and jurisdiction issues defined therein. Any holder of this document is advised that information contained hereon reflects the Company's findings at the time of its intervention only and within the limits of Client's instructions, if any. The Company's sole responsibility is to its Client and this document does not exonerate parties to a transaction from exercising all their rights and obligations under the transaction documents. This document cannot be reproduced except in full, without prior written approval of the Company. Any unauthorized alteration, forgery or falsification of the content or appearance of this document is unlawful and offenders may be prosecuted to the fullest extent of the law.

System Validation from Original Equipment Supplier

Calibration Laboratory of
Schmid & Partner
Engineering AG
Zeughausstrasse 43, 8004 Zurich, Switzerland

S Schweizerischer Kalibrierdienst
C Service suisse d'étalonnage
Servizio svizzero di taratura
S Swiss Calibration Service

Accredited by the Swiss Accreditation Service (SAS)
The Swiss Accreditation Service is one of the signatories to the EA Multilateral Agreement for the recognition of calibration certificates

Accreditation No.: SCS 0108

Client **SGS-TW (Auden)** **Certificate No: D750V3-1015_Aug19**

CALIBRATION CERTIFICATE

Object	D750V3 - SN:1015
Calibration procedure(s)	QA CAL-05.v11 Calibration Procedure for SAR Validation Sources between 0.7-3 GHz
Calibration date:	August 23, 2019

This calibration certificate documents the traceability to national standards, which realize the physical units of measurements (SI).
The measurements and the uncertainties with confidence probability are given on the following pages and are part of the certificate.

All calibrations have been conducted in the closed laboratory facility: environment temperature (22 ± 3)°C and humidity < 70%.

Calibration Equipment used (M&TE critical for calibration)

Primary Standards	ID #	Cal Date (Certificate No.)	Scheduled Calibration
Power meter NRP	SN: 104778	03-Apr-19 (No. 217-02892/02893)	Apr-20
Power sensor NRP-Z91	SN: 103244	03-Apr-19 (No. 217-02892)	Apr-20
Power sensor NRP-Z91	SN: 103245	03-Apr-19 (No. 217-02893)	Apr-20
Reference 20 dB Attenuator	SN: 5058 (20k)	04-Apr-19 (No. 217-02894)	Apr-20
Type-N mismatch combination	SN: 5047.2 / 06327	04-Apr-19 (No. 217-02895)	Apr-20
Reference Probe EX3DV4	SN: 7349	29-May-19 (No. EX3-7349_May19)	May-20
DAE4	SN: 601	30-Apr-19 (No. DAE4-601_Apr19)	Apr-20

Secondary Standards	ID #	Check Date (in house)	Scheduled Check
Power meter E4419B	SN: GB39512475	30-Oct-14 (in house check Feb-19)	In house check: Oct-20
Power sensor HP 8481A	SN: US37292783	07-Oct-15 (in house check Oct-18)	In house check: Oct-20
Power sensor HP 8481A	SN: MY41092317	07-Oct-15 (in house check Oct-18)	In house check: Oct-20
RF generator R&S SMT-06	SN: 100972	15-Jun-15 (in house check Oct-18)	In house check: Oct-20
Network Analyzer Agilent E8358A	SN: US41080477	31-Mar-14 (in house check Oct-18)	In house check: Oct-19

	Name	Function	Signature
Calibrated by:	Jeton Kastrati	Laboratory Technician	
Approved by:	Katja Pokovic	Technical Manager	

Issued: August 23, 2019

This calibration certificate shall not be reproduced except in full without written approval of the laboratory.

Certificate No: D750V3-1015_Aug19 Page 1 of 6

Unless otherwise stated the results shown in this test report refer only to the sample(s) tested and such sample(s) are retained for 90 days only.
除非另有說明，此報告結果僅對測試之樣品負責，同時此樣品僅保留90天。本報告未經本公司書面許可，不可部份複製。
This document is issued by the Company subject to its General Conditions of Service printed overleaf, available on request or accessible at http://www.sgs.com.tw/Terms-and-Conditions and for electronic format documents, subject to Terms and Conditions for Electronic Documents at http://www.sgs.com.tw/Terms-and-Conditions. Attention is drawn to the limitation of liability, indemnification and jurisdiction issues defined therein. Any holder of this document is advised that information contained hereon reflects the Company's findings at the time of its intervention only and within the limits of Client's instructions, if any. The Company's sole responsibility is to its Client and this document does not exonerate parties to a transaction from exercising all their rights and obligations under the transaction documents. This document cannot be reproduced except in full, without prior written approval of the Company. Any unauthorized alteration, forgery or falsification of the content or appearance of this document is unlawful and offenders may be prosecuted to the fullest extent of the law.

Calibration Laboratory of
Schmid & Partner
Engineering AG
Zeughausstrasse 43, 8004 Zurich, Switzerland

S Schweizerischer Kalibrierdienst
C Service suisse d'étalonnage
Servizio svizzero di taratura
S Swiss Calibration Service

Accredited by the Swiss Accreditation Service (SAS)
The Swiss Accreditation Service is one of the signatories to the EA Multilateral Agreement for the recognition of calibration certificates

Accreditation No.: SCS 0108

Glossary:

TSL	tissue simulating liquid
ConvF	sensitivity in TSL / NORM x,y,z
N/A	not applicable or not measured

Calibration is Performed According to the Following Standards:

a) IEEE Std 1528-2013, "IEEE Recommended Practice for Determining the Peak Spatial-Averaged Specific Absorption Rate (SAR) in the Human Head from Wireless Communications Devices: Measurement Techniques", June 2013
b) IEC 62209-1, "Measurement procedure for the assessment of Specific Absorption Rate (SAR) from hand-held and body-mounted devices used next to the ear (frequency range of 300 MHz to 6 GHz)", July 2016
c) IEC 62209-2, "Procedure to determine the Specific Absorption Rate (SAR) for wireless communication devices used in close proximity to the human body (frequency range of 30 MHz to 6 GHz)", March 2010
d) KDB 865664, "SAR Measurement Requirements for 100 MHz to 6 GHz"

Additional Documentation:

e) DASY4/5 System Handbook

Methods Applied and Interpretation of Parameters:

- *Measurement Conditions:* Further details are available from the Validation Report at the end of the certificate. All figures stated in the certificate are valid at the frequency indicated.
- *Antenna Parameters with TSL:* The dipole is mounted with the spacer to position its feed point exactly below the center marking of the flat phantom section, with the arms oriented parallel to the body axis.
- *Feed Point Impedance and Return Loss:* These parameters are measured with the dipole positioned under the liquid filled phantom. The impedance stated is transformed from the measurement at the SMA connector to the feed point. The Return Loss ensures low reflected power. No uncertainty required.
- *Electrical Delay:* One-way delay between the SMA connector and the antenna feed point. No uncertainty required.
- *SAR measured:* SAR measured at the stated antenna input power.
- *SAR normalized:* SAR as measured, normalized to an input power of 1 W at the antenna connector.
- *SAR for nominal TSL parameters:* The measured TSL parameters are used to calculate the nominal SAR result.

The reported uncertainty of measurement is stated as the standard uncertainty of measurement multiplied by the coverage factor k=2, which for a normal distribution corresponds to a coverage probability of approximately 95%.

Unless otherwise stated the results shown in this test report refer only to the sample(s) tested and such sample(s) are retained for 90 days only.
除非另有說明，此報告結果僅對測試之樣品負責，同時此樣品僅保留90天。本報告未經本公司書面許可，不可部份複製。
This document is issued by the Company subject to its General Conditions of Service printed overleaf, available on request or accessible at http://www.sgs.com.tw/Terms-and-Conditions and for electronic format documents, subject to Terms and Conditions for Electronic Documents at http://www.sgs.com.tw/Terms-and-Conditions. Attention is drawn to the limitation of liability, indemnification and jurisdiction issues defined therein. Any holder of this document is advised that information contained hereon reflects the Company's findings at the time of its intervention only and within the limits of Client's instructions, if any. The Company's sole responsibility is to its Client and this document does not exonerate parties to a transaction from exercising all their rights and obligations under the transaction documents. This document cannot be reproduced except in full, without prior written approval of the Company. Any unauthorized alteration, forgery or falsification of the content or appearance of this document is unlawful and offenders may be prosecuted to the fullest extent of the law.

Measurement Conditions

DASY system configuration, as far as not given on page 1.

DASY Version	DASY5	V52.10.2
Extrapolation	Advanced Extrapolation	
Phantom	Modular Flat Phantom	
Distance Dipole Center - TSL	15 mm	with Spacer
Zoom Scan Resolution	dx, dy, dz = 5 mm	
Frequency	750 MHz ± 1 MHz	

Head TSL parameters

The following parameters and calculations were applied.

	Temperature	**Permittivity**	**Conductivity**
Nominal Head TSL parameters	22.0 °C	41.9	0.89 mho/m
Measured Head TSL parameters	(22.0 ± 0.2) °C	42.7 ± 6 %	0.90 mho/m ± 6 %
Head TSL temperature change during test	< 0.5 °C	----	----

SAR result with Head TSL

SAR averaged over 1 cm^3 (1 g) of Head TSL	Condition	
SAR measured	250 mW input power	2.16 W/kg
SAR for nominal Head TSL parameters	normalized to 1W	**8.60 W/kg ± 17.0 % (k=2)**

SAR averaged over 10 cm^3 (10 g) of Head TSL	condition	
SAR measured	250 mW input power	1.42 W/kg
SAR for nominal Head TSL parameters	normalized to 1W	**5.66 W/kg ± 16.5 % (k=2)**

Unless otherwise stated the results shown in this test report refer only to the sample(s) tested and such sample(s) are retained for 90 days only.
除非另有說明，此報告結果僅對測試之樣品負責，同時此樣品僅保留90天。本報告未經本公司書面許可，不可部份複製。
This document is issued by the Company subject to its General Conditions of Service printed overleaf, available on request or accessible at http://www.sgs.com.tw/Terms-and-Conditions and for electronic format documents, subject to Terms and Conditions for Electronic Documents at http://www.sgs.com.tw/Terms-and-Conditions. Attention is drawn to the limitation of liability, indemnification and jurisdiction issues defined therein. Any holder of this document is advised that information contained hereon reflects the Company's findings at the time of its intervention only and within the limits of Client's instructions, if any. The Company's sole responsibility is to its Client and this document does not exonerate parties to a transaction from exercising all their rights and obligations under the transaction documents. This document cannot be reproduced except in full, without prior written approval of the Company. Any unauthorized alteration, forgery or falsification of the content or appearance of this document is unlawful and offenders may be prosecuted to the fullest extent of the law.

SGS Taiwan Ltd. 台灣檢驗科技股份有限公司
No.134,Wu Kung Road, New Taipei Industrial Park, Wuku District, New Taipei City, Taiwan/新北市五股區新北產業園區五工路 134 號
t (886-2) 2299-3279 f (886-2) 2298-0488 www.sgs.com.tw
Member of SGS Group

Appendix (Additional assessments outside the scope of SCS 0108)

Antenna Parameters with Head TSL

Impedance, transformed to feed point	53.1 Ω - 0.6 jΩ
Return Loss	- 30.4 dB

General Antenna Parameters and Design

Electrical Delay (one direction)	1.037 ns

After long term use with 100W radiated power, only a slight warming of the dipole near the feedpoint can be measured.

The dipole is made of standard semirigid coaxial cable. The center conductor of the feeding line is directly connected to the second arm of the dipole. The antenna is therefore short-circuited for DC-signals. On some of the dipoles, small end caps are added to the dipole arms in order to improve matching when loaded according to the position as explained in the "Measurement Conditions" paragraph. The SAR data are not affected by this change. The overall dipole length is still according to the Standard.
No excessive force must be applied to the dipole arms, because they might bend or the soldered connections near the feedpoint may be damaged.

Additional EUT Data

Manufactured by	SPEAG

Unless otherwise stated the results shown in this test report refer only to the sample(s) tested and such sample(s) are retained for 90 days only.
除非另有說明，此報告結果僅對測試之樣品負責，同時此樣品僅保留90天。本報告未經本公司書面許可，不可部份複製。
This document is issued by the Company subject to its General Conditions of Service printed overleaf, available on request or accessible at http://www.sgs.com.tw/Terms-and-Conditions and for electronic format documents, subject to Terms and Conditions for Electronic Documents at http://www.sgs.com.tw/Terms-and-Conditions. Attention is drawn to the limitation of liability, indemnification and jurisdiction issues defined therein. Any holder of this document is advised that information contained hereon reflects the Company's findings at the time of its intervention only and within the limits of Client's instructions, if any. The Company's sole responsibility is to its Client and this document does not exonerate parties to a transaction from exercising all their rights and obligations under the transaction documents. This document cannot be reproduced except in full, without prior written approval of the Company. Any unauthorized alteration, forgery or falsification of the content or appearance of this document is unlawful and offenders may be prosecuted to the fullest extent of the law.
SGS Taiwan Ltd. 台灣檢驗科技股份有限公司
No.134,Wu Kung Road, New Taipei Industrial Park, Wuku District, New Taipei City, Taiwan/新北市五股區新北產業園區五工路 134 號
t (886-2) 2299-3279 f (886-2) 2298-0488 www.sgs.com.tw
Member of SGS Group

DASY5 Validation Report for Head TSL

Date: 23.08.2019

Test Laboratory: SPEAG, Zurich, Switzerland

DUT: Dipole 750 MHz; Type: D750V3; Serial: D750V3 - SN:1015

Communication System: UID 0 - CW; Frequency: 750 MHz
Medium parameters used: f = 750 MHz; σ = 0.9 S/m; ε_r = 42.7; ρ = 1000 kg/m^3
Phantom section: Flat Section
Measurement Standard: DASY5 (IEEE/IEC/ANSI C63.19-2011)

DASY52 Configuration:

- Probe: EX3DV4 - SN7349; ConvF(10.07, 10.07, 10.07) @ 750 MHz; Calibrated: 29.05.2019
- Sensor-Surface: 1.4mm (Mechanical Surface Detection)
- Electronics: DAE4 Sn601; Calibrated: 30.04.2019
- Phantom: Flat Phantom 4.9 (front); Type: QD 00L P49 AA; Serial: 1001
- DASY52 52.10.2(1504); SEMCAD X 14.6.12(7470)

Dipole Calibration for Head Tissue/Pin=250 mW, d=15mm/Zoom Scan (7x7x7)/Cube 0:
Measurement grid: dx=5mm, dy=5mm, dz=5mm
Reference Value = 59.91 V/m; Power Drift = -0.01 dB
Peak SAR (extrapolated) = 3.25 W/kg
SAR(1 g) = 2.16 W/kg; SAR(10 g) = 1.42 W/kg
Maximum value of SAR (measured) = 2.89 W/kg

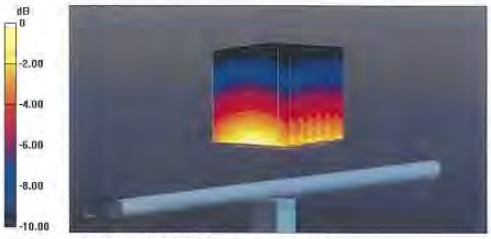

0 dB = 2.89 W/kg = 4.61 dBW/kg

Unless otherwise stated the results shown in this test report refer only to the sample(s) tested and such sample(s) are retained for 90 days only.
除非另有說明，此報告結果僅對測試之樣品負責，同時此樣品僅保留90天。本報告未經本公司書面許可，不可部份複製。
This document is issued by the Company subject to its General Conditions of Service printed overleaf, available on request or accessible at http://www.sgs.com.tw/Terms-and-Conditions and for electronic format documents, subject to Terms and Conditions for Electronic Documents at http://www.sgs.com.tw/Terms-and-Conditions. Attention is drawn to the limitation of liability, indemnification and jurisdiction issues defined therein. Any holder of this document is advised that information contained hereon reflects the Company's findings at the time of its intervention only and within the limits of Client's instructions, if any. The Company's sole responsibility is to its Client and this document does not exonerate parties to a transaction from exercising all their rights and obligations under the transaction documents. This document cannot be reproduced except in full, without prior written approval of the Company. Any unauthorized alteration, forgery or falsification of the content or appearance of this document is unlawful and offenders may be prosecuted to the fullest extent of the law.

SGS Taiwan Ltd. 台灣檢驗科技股份有限公司
No.134,Wu Kung Road, New Taipei Industrial Park, Wuku District, New Taipei City, Taiwan/新北市五股區新北產業園區五工路 134 號
t (886-2) 2299-3279 f (886-2) 2298-0488 www.sgs.com.tw
Member of SGS Group

Impedance Measurement Plot for Head TSL

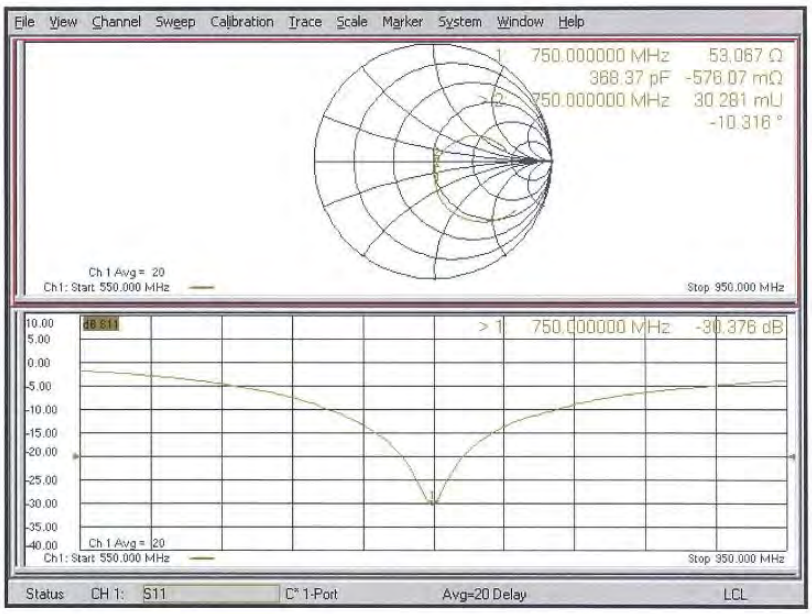

Unless otherwise stated the results shown in this test report refer only to the sample(s) tested and such sample(s) are retained for 90 days only.
除非另有說明，此報告結果僅對測試之樣品負責，同時此樣品僅保留90天。本報告未經本公司書面許可，不可部份複製。
This document is issued by the Company subject to its General Conditions of Service printed overleaf, available on request or accessible at http://www.sgs.com.tw/Terms-and-Conditions and for electronic format documents, subject to Terms and Conditions for Electronic Documents at http://www.sgs.com.tw/Terms-and-Conditions. Attention is drawn to the limitation of liability, indemnification and jurisdiction issues defined therein. Any holder of this document is advised that information contained hereon reflects the Company's findings at the time of its intervention only and within the limits of Client's instructions, if any. The Company's sole responsibility is to its Client and this document does not exonerate parties to a transaction from exercising all their rights and obligations under the transaction documents. This document cannot be reproduced except in full, without prior written approval of the Company. Any unauthorized alteration, forgery or falsification of the content or appearance of this document is unlawful and offenders may be prosecuted to the fullest extent of the law.

SGS Taiwan Ltd. 台灣檢驗科技股份有限公司
No.134,Wu Kung Road, New Taipei Industrial Park, Wuku District, New Taipei City, Taiwan/新北市五股區新北產業園區五工路 134 號
t (886-2) 2299-3279 f (886-2) 2298-0488 www.sgs.com.tw
Member of SGS Group

Calibration Laboratory of
Schmid & Partner
Engineering AG
Zeughausstrasse 43, 8004 Zurich, Switzerland

S Schweizerischer Kalibrierdienst
C Service suisse d'étalonnage
Servizio svizzero di taratura
S Swiss Calibration Service

Accredited by the Swiss Accreditation Service (SAS)
The Swiss Accreditation Service is one of the signatories to the EA Multilateral Agreement for the recognition of calibration certificates

Accreditation No.: SCS 0108

Client SGS-TW (Auden)

Certificate No: D1750V2-1008_Aug19

CALIBRATION CERTIFICATE

Object	D1750V2 - SN:1008
Calibration procedure(s)	QA CAL-05.v11 Calibration Procedure for SAR Validation Sources between 0.7-3 GHz
Calibration date:	August 23, 2019

This calibration certificate documents the traceability to national standards, which realize the physical units of measurements (SI).
The measurements and the uncertainties with confidence probability are given on the following pages and are part of the certificate.

All calibrations have been conducted in the closed laboratory facility: environment temperature (22 ± 3)°C and humidity < 70%.

Calibration Equipment used (M&TE critical for calibration)

Primary Standards	ID #	Cal Date (Certificate No.)	Scheduled Calibration
Power meter NRP	SN: 104778	03-Apr-19 (No. 217-02892/02893)	Apr-20
Power sensor NRP-Z91	SN: 103244	03-Apr-19 (No. 217-02892)	Apr-20
Power sensor NRP-Z91	SN: 103245	03-Apr-19 (No. 217-02893)	Apr-20
Reference 20 dB Attenuator	SN: 5058 (20k)	04-Apr-19 (No. 217-02894)	Apr-20
Type-N mismatch combination	SN: 5047.2 / 06327	04-Apr-19 (No. 217-02895)	Apr-20
Reference Probe EX3DV4	SN: 7349	29-May-19 (No. EX3-7349_May19)	May-20
DAE4	SN: 601	30-Apr-19 (No. DAE4-601_Apr19)	Apr-20

Secondary Standards	ID #	Check Date (in house)	Scheduled Check
Power meter E4419B	SN: GB39512475	30-Oct-14 (in house check Feb-19)	In house check: Oct-20
Power sensor HP 8481A	SN: US37292783	07-Oct-15 (in house check Oct-18)	In house check: Oct-20
Power sensor HP 8481A	SN: MY41092317	07-Oct-15 (in house check Oct-18)	In house check: Oct-20
RF generator R&S SMT-06	SN: 100972	15-Jun-15 (in house check Oct-18)	In house check: Oct-20
Network Analyzer Agilent E8358A	SN: US41080477	31-Mar-14 (in house check Oct-18)	In house check: Oct-19

	Name	Function	Signature
Calibrated by:	Jeton Kastrati	Laboratory Technician	
Approved by:	Katja Pokovic	Technical Manager	

Issued: August 23, 2019

This calibration certificate shall not be reproduced except in full without written approval of the laboratory.

Unless otherwise stated the results shown in this test report refer only to the sample(s) tested and such sample(s) are retained for 90 days only.
除非另有說明，此報告結果僅對測試之樣品負責，同時此樣品僅保留90天。本報告未經本公司書面許可，不可部份複製。
This document is issued by the Company subject to its General Conditions of Service printed overleaf, available on request or accessible at http://www.sgs.com.tw/Terms-and-Conditions and for electronic format documents, subject to Terms and Conditions for Electronic Documents at http://www.sgs.com.tw/Terms-and-Conditions. Attention is drawn to the limitation of liability, indemnification and jurisdiction issues defined therein. Any holder of this document is advised that information contained hereon reflects the Company's findings at the time of its intervention only and within the limits of Client's instructions, if any. The Company's sole responsibility is to its Client and this document does not exonerate parties to a transaction from exercising all their rights and obligations under the transaction documents. This document cannot be reproduced except in full, without prior written approval of the Company. Any unauthorized alteration, forgery or falsification of the content or appearance of this document is unlawful and offenders may be prosecuted to the fullest extent of the law.

Calibration Laboratory of
Schmid & Partner
Engineering AG
Zeughausstrasse 43, 8004 Zurich, Switzerland

S Schweizerischer Kalibrierdienst
C Service suisse d'étalonnage
Servizio svizzero di taratura
S Swiss Calibration Service

Accredited by the Swiss Accreditation Service (SAS)
The Swiss Accreditation Service is one of the signatories to the EA Multilateral Agreement for the recognition of calibration certificates

Accreditation No.: SCS 0108

Glossary:

TSL	tissue simulating liquid
ConvF	sensitivity in TSL / NORM x,y,z
N/A	not applicable or not measured

Calibration is Performed According to the Following Standards:

a) IEEE Std 1528-2013, "IEEE Recommended Practice for Determining the Peak Spatial-Averaged Specific Absorption Rate (SAR) in the Human Head from Wireless Communications Devices: Measurement Techniques", June 2013
b) IEC 62209-1, "Measurement procedure for the assessment of Specific Absorption Rate (SAR) from hand-held and body-mounted devices used next to the ear (frequency range of 300 MHz to 6 GHz)", July 2016
c) IEC 62209-2, "Procedure to determine the Specific Absorption Rate (SAR) for wireless communication devices used in close proximity to the human body (frequency range of 30 MHz to 6 GHz)", March 2010
d) KDB 865664, "SAR Measurement Requirements for 100 MHz to 6 GHz"

Additional Documentation:

e) DASY4/5 System Handbook

Methods Applied and Interpretation of Parameters:

- *Measurement Conditions:* Further details are available from the Validation Report at the end of the certificate. All figures stated in the certificate are valid at the frequency indicated.
- *Antenna Parameters with TSL:* The dipole is mounted with the spacer to position its feed point exactly below the center marking of the flat phantom section, with the arms oriented parallel to the body axis.
- *Feed Point Impedance and Return Loss:* These parameters are measured with the dipole positioned under the liquid filled phantom. The impedance stated is transformed from the measurement at the SMA connector to the feed point. The Return Loss ensures low reflected power. No uncertainty required.
- *Electrical Delay:* One-way delay between the SMA connector and the antenna feed point. No uncertainty required.
- *SAR measured:* SAR measured at the stated antenna input power.
- *SAR normalized:* SAR as measured, normalized to an input power of 1 W at the antenna connector.
- *SAR for nominal TSL parameters:* The measured TSL parameters are used to calculate the nominal SAR result.

The reported uncertainty of measurement is stated as the standard uncertainty of measurement multiplied by the coverage factor k=2, which for a normal distribution corresponds to a coverage probability of approximately 95%.

Unless otherwise stated the results shown in this test report refer only to the sample(s) tested and such sample(s) are retained for 90 days only.
除非另有說明，此報告結果僅對測試之樣品負責，同時此樣品僅保留90天。本報告未經本公司書面許可，不可部份複製。
This document is issued by the Company subject to its General Conditions of Service printed overleaf, available on request or accessible at http://www.sgs.com.tw/Terms-and-Conditions and for electronic format documents, subject to Terms and Conditions for Electronic Documents at http://www.sgs.com.tw/Terms-and-Conditions. Attention is drawn to the limitation of liability, indemnification and jurisdiction issues defined therein. Any holder of this document is advised that information contained hereon reflects the Company's findings at the time of its intervention only and within the limits of Client's instructions, if any. The Company's sole responsibility is to its Client and this document does not exonerate parties to a transaction from exercising all their rights and obligations under the transaction documents. This document cannot be reproduced except in full, without prior written approval of the Company. Any unauthorized alteration, forgery or falsification of the content or appearance of this document is unlawful and offenders may be prosecuted to the fullest extent of the law.

Measurement Conditions

DASY system configuration, as far as not given on page 1.

DASY Version	DASY5	V52.10.2
Extrapolation	Advanced Extrapolation	
Phantom	Modular Flat Phantom	
Distance Dipole Center - TSL	10 mm	with Spacer
Zoom Scan Resolution	dx, dy, dz = 5 mm	
Frequency	1750 MHz ± 1 MHz	

Head TSL parameters

The following parameters and calculations were applied.

	Temperature	**Permittivity**	**Conductivity**
Nominal Head TSL parameters	22.0 °C	40.1	1.37 mho/m
Measured Head TSL parameters	(22.0 ± 0.2) °C	40.8 ± 6 %	1.36 mho/m ± 6 %
Head TSL temperature change during test	< 0.5 °C	----	----

SAR result with Head TSL

SAR averaged over 1 cm^3 (1 g) of Head TSL	Condition	
SAR measured	250 mW input power	9.13 W/kg
SAR for nominal Head TSL parameters	normalized to 1W	**36.8 W/kg ± 17.0 % (k=2)**

SAR averaged over 10 cm^3 (10 g) of Head TSL	condition	
SAR measured	250 mW input power	4.83 W/kg
SAR for nominal Head TSL parameters	normalized to 1W	**19.4 W/kg ± 16.5 % (k=2)**

Unless otherwise stated the results shown in this test report refer only to the sample(s) tested and such sample(s) are retained for 90 days only.
除非另有說明，此報告結果僅對測試之樣品負責，同時此樣品僅保留90天。本報告未經本公司書面許可，不可部份複製。
This document is issued by the Company subject to its General Conditions of Service printed overleaf, available on request or accessible at http://www.sgs.com.tw/Terms-and-Conditions and for electronic format documents, subject to Terms and Conditions for Electronic Documents at http://www.sgs.com.tw/Terms-and-Conditions. Attention is drawn to the limitation of liability, indemnification and jurisdiction issues defined therein. Any holder of this document is advised that information contained hereon reflects the Company's findings at the time of its intervention only and within the limits of Client's instructions, if any. The Company's sole responsibility is to its Client and this document does not exonerate parties to a transaction from exercising all their rights and obligations under the transaction documents. This document cannot be reproduced except in full, without prior written approval of the Company. Any unauthorized alteration, forgery or falsification of the content or appearance of this document is unlawful and offenders may be prosecuted to the fullest extent of the law.

SGS Taiwan Ltd. 台灣檢驗科技股份有限公司
No.134,Wu Kung Road, New Taipei Industrial Park, Wuku District, New Taipei City, Taiwan/新北市五股區新北產業園區五工路 134 號
t (886-2) 2299-3279 f (886-2) 2298-0488 www.sgs.com.tw
Member of SGS Group

Appendix (Additional assessments outside the scope of SCS 0108)

Antenna Parameters with Head TSL

Impedance, transformed to feed point	49.0 Ω + 0.6 jΩ
Return Loss	-38.5 dB

General Antenna Parameters and Design

Electrical Delay (one direction)	1.222 ns

After long term use with 100W radiated power, only a slight warming of the dipole near the feedpoint can be measured.

The dipole is made of standard semirigid coaxial cable. The center conductor of the feeding line is directly connected to the second arm of the dipole. The antenna is therefore short-circuited for DC-signals. On some of the dipoles, small end caps are added to the dipole arms in order to improve matching when loaded according to the position as explained in the "Measurement Conditions" paragraph. The SAR data are not affected by this change. The overall dipole length is still according to the Standard.
No excessive force must be applied to the dipole arms, because they might bend or the soldered connections near the feedpoint may be damaged.

Additional EUT Data

Manufactured by	SPEAG

Unless otherwise stated the results shown in this test report refer only to the sample(s) tested and such sample(s) are retained for 90 days only.
除非另有說明，此報告結果僅對測試之樣品負責，同時此樣品僅保留90天。本報告未經本公司書面許可，不可部份複製。
This document is issued by the Company subject to its General Conditions of Service printed overleaf, available on request or accessible at http://www.sgs.com.tw/Terms-and-Conditions and for electronic format documents, subject to Terms and Conditions for Electronic Documents at http://www.sgs.com.tw/Terms-and-Conditions. Attention is drawn to the limitation of liability, indemnification and jurisdiction issues defined therein. Any holder of this document is advised that information contained hereon reflects the Company's findings at the time of its intervention only and within the limits of Client's instructions, if any. The Company's sole responsibility is to its Client and this document does not exonerate parties to a transaction from exercising all their rights and obligations under the transaction documents. This document cannot be reproduced except in full, without prior written approval of the Company. Any unauthorized alteration, forgery or falsification of the content or appearance of this document is unlawful and offenders may be prosecuted to the fullest extent of the law.
SGS Taiwan Ltd. 台灣檢驗科技股份有限公司
No.134,Wu Kung Road, New Taipei Industrial Park, Wuku District, New Taipei City, Taiwan/新北市五股區新北產業園區五工路 134 號
t (886-2) 2299-3279 f (886-2) 2298-0488 www.sgs.com.tw
Member of SGS Group

DASY5 Validation Report for Head TSL

Date: 23.08.2019

Test Laboratory: SPEAG, Zurich, Switzerland

DUT: Dipole 1750 MHz; Type: D1750V2; Serial: D1750V2 - SN:1008

Communication System: UID 0 - CW; Frequency: 1750 MHz
Medium parameters used: f = 1750 MHz; σ = 1.36 S/m; ε_r = 40.8; ρ = 1000 kg/m^3
Phantom section: Flat Section
Measurement Standard: DASY5 (IEEE/IEC/ANSI C63.19-2011)

DASY52 Configuration:

- Probe: EX3DV4 - SN7349; ConvF(8.67, 8.67, 8.67) @ 1750 MHz; Calibrated: 29.05.2019
- Sensor-Surface: 1.4mm (Mechanical Surface Detection)
- Electronics: DAE4 Sn601; Calibrated: 30.04.2019
- Phantom: Flat Phantom 5.0 (front); Type: QD 000 P50 AA; Serial: 1001
- DASY52 52.10.2(1504); SEMCAD X 14.6.12(7470)

Dipole Calibration for Head Tissue/Pin=250 mW, d=10mm/Zoom Scan (7x7x7)/Cube 0:
Measurement grid: dx=5mm, dy=5mm, dz=5mm
Reference Value = 106.5 V/m; Power Drift = -0.01 dB
Peak SAR (extrapolated) = 17.0 W/kg
SAR(1 g) = 9.13 W/kg; SAR(10 g) = 4.83 W/kg
Maximum value of SAR (measured) = 14.3 W/kg

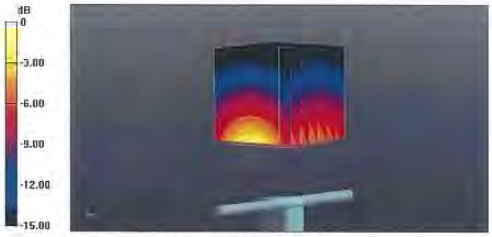

0 dB = 14.3 W/kg = 11.55 dBW/kg

Unless otherwise stated the results shown in this test report refer only to the sample(s) tested and such sample(s) are retained for 90 days only.
除非另有說明，此報告結果僅對測試之樣品負責，同時此樣品僅保留90天。本報告未經本公司書面許可，不可部份複製。
This document is issued by the Company subject to its General Conditions of Service printed overleaf, available on request or accessible at http://www.sgs.com.tw/Terms-and-Conditions and for electronic format documents, subject to Terms and Conditions for Electronic Documents at http://www.sgs.com.tw/Terms-and-Conditions. Attention is drawn to the limitation of liability, indemnification and jurisdiction issues defined therein. Any holder of this document is advised that information contained hereon reflects the Company's findings at the time of its intervention only and within the limits of Client's instructions, if any. The Company's sole responsibility is to its Client and this document does not exonerate parties to a transaction from exercising all their rights and obligations under the transaction documents. This document cannot be reproduced except in full, without prior written approval of the Company. Any unauthorized alteration, forgery or falsification of the content or appearance of this document is unlawful and offenders may be prosecuted to the fullest extent of the law.
SGS Taiwan Ltd. 台灣檢驗科技股份有限公司
No.134,Wu Kung Road, New Taipei Industrial Park, Wuku District, New Taipei City, Taiwan/新北市五股區新北產業園區五工路 134 號
t (886-2) 2299-3279 f (886-2) 2298-0488 www.sgs.com.tw
Member of SGS Group

Impedance Measurement Plot for Head TSL

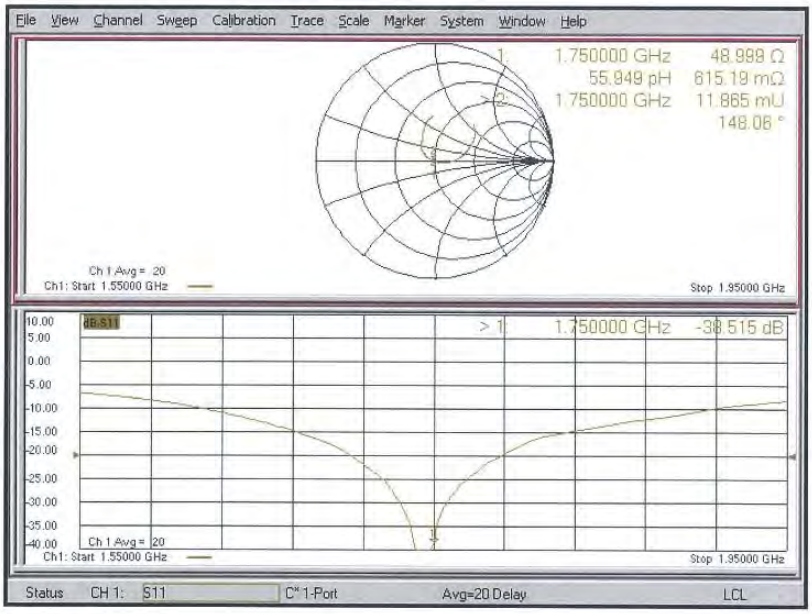

Unless otherwise stated the results shown in this test report refer only to the sample(s) tested and such sample(s) are retained for 90 days only.
除非另有說明，此報告結果僅對測試之樣品負責，同時此樣品僅保留90天。本報告未經本公司書面許可，不可部份複製。
This document is issued by the Company subject to its General Conditions of Service printed overleaf, available on request or accessible at http://www.sgs.com.tw/Terms-and-Conditions and for electronic format documents, subject to Terms and Conditions for Electronic Documents at http://www.sgs.com.tw/Terms-and-Conditions. Attention is drawn to the limitation of liability, indemnification and jurisdiction issues defined therein. Any holder of this document is advised that information contained hereon reflects the Company's findings at the time of its intervention only and within the limits of Client's instructions, if any. The Company's sole responsibility is to its Client and this document does not exonerate parties to a transaction from exercising all their rights and obligations under the transaction documents. This document cannot be reproduced except in full, without prior written approval of the Company. Any unauthorized alteration, forgery or falsification of the content or appearance of this document is unlawful and offenders may be prosecuted to the fullest extent of the law.

SGS Taiwan Ltd. 台灣檢驗科技股份有限公司
No.134,Wu Kung Road, New Taipei Industrial Park, Wuku District, New Taipei City, Taiwan/新北市五股區新北產業園區五工路 134 號
t (886-2) 2299-3279 f (886-2) 2298-0488 www.sgs.com.tw
Member of SGS Group

Calibration Laboratory of
Schmid & Partner
Engineering AG
Zeughausstrasse 43, 8004 Zurich, Switzerland

S Schweizerischer Kalibrierdienst
C Service suisse d'étalonnage
S Servizio svizzero di taratura
Swiss Calibration Service

Accredited by the Swiss Accreditation Service (SAS)
The Swiss Accreditation Service is one of the signatories to the EA Multilateral Agreement for the recognition of calibration certificates

Accreditation No.: SCS 0108

Client SGS-TW (Auden)

Certificate No: D2450V2-727_Apr20

CALIBRATION CERTIFICATE

Object	D2450V2 - SN:727
Calibration procedure(s)	QA CAL-05.v11 Calibration Procedure for SAR Validation Sources between 0.7-3 GHz
Calibration date:	April 22, 2020

This calibration certificate documents the traceability to national standards, which realize the physical units of measurements (SI).
The measurements and the uncertainties with confidence probability are given on the following pages and are part of the certificate.

All calibrations have been conducted in the closed laboratory facility: environment temperature (22 ± 3)°C and humidity < 70%.

Calibration Equipment used (M&TE critical for calibration)

Primary Standards	ID #	Cal Date (Certificate No.)	Scheduled Calibration
Power meter NRP	SN: 104778	01-Apr-20 (No. 217-03100/03101)	Apr-21
Power sensor NRP-Z91	SN: 103244	01-Apr-20 (No. 217-03100)	Apr-21
Power sensor NRP-Z91	SN: 103245	01-Apr-20 (No. 217-03101)	Apr-21
Reference 20 dB Attenuator	SN: BH9394 (20k)	31-Mar-20 (No. 217-03106)	Apr-21
Type-N mismatch combination	SN: 310982 / 06327	31-Mar-20 (No. 217-03104)	Apr-21
Reference Probe EX3DV4	SN: 7349	31-Dec-19 (No. EX3-7349_Dec19)	Dec-20
DAE4	SN: 601	27-Dec-19 (No. DAE4-601_Dec19)	Dec-20

Secondary Standards	ID #	Check Date (in house)	Scheduled Check
Power meter E4419B	SN: GB39512475	30-Oct-14 (in house check Feb-19)	In house check: Oct-20
Power sensor HP 8481A	SN: US37292783	07-Oct-15 (in house check Oct-18)	In house check: Oct-20
Power sensor HP 8481A	SN: MY41092317	07-Oct-15 (in house check Oct-18)	In house check: Oct-20
RF generator R&S SMT-06	SN: 100972	15-Jun-15 (in house check Oct-18)	In house check: Oct-20
Network Analyzer Agilent E8358A	SN: US41080477	31-Mar-14 (in house check Oct-19)	In house check: Oct-20

	Name	Function	Signature
Calibrated by:	Jeffrey Katzman	Laboratory Technician	
Approved by:	Katja Pokovic	Technical Manager	

Issued: April 24, 2020

This calibration certificate shall not be reproduced except in full without written approval of the laboratory.

Unless otherwise stated the results shown in this test report refer only to the sample(s) tested and such sample(s) are retained for 90 days only.
除非另有說明，此報告結果僅對測試之樣品負責，同時此樣品僅保留90天。本報告未經本公司書面許可，不可部份複製。
This document is issued by the Company subject to its General Conditions of Service printed overleaf, available on request or accessible at http://www.sgs.com.tw/Terms-and-Conditions and for electronic format documents, subject to Terms and Conditions for Electronic Documents at http://www.sgs.com.tw/Terms-and-Conditions. Attention is drawn to the limitation of liability, indemnification and jurisdiction issues defined therein. Any holder of this document is advised that information contained hereon reflects the Company's findings at the time of its intervention only and within the limits of Client's instructions, if any. The Company's sole responsibility is to its Client and this document does not exonerate parties to a transaction from exercising all their rights and obligations under the transaction documents. This document cannot be reproduced except in full, without prior written approval of the Company. Any unauthorized alteration, forgery or falsification of the content or appearance of this document is unlawful and offenders may be prosecuted to the fullest extent of the law.

Calibration Laboratory of
Schmid & Partner
Engineering AG
Zeughausstrasse 43, 8004 Zurich, Switzerland

S Schweizerischer Kalibrierdienst
C Service suisse d'étalonnage
Servizio svizzero di taratura
S Swiss Calibration Service

Accredited by the Swiss Accreditation Service (SAS)
The Swiss Accreditation Service is one of the signatories to the EA Multilateral Agreement for the recognition of calibration certificates

Accreditation No.: SCS 0108

Glossary:

TSL	tissue simulating liquid
ConvF	sensitivity in TSL / NORM x,y,z
N/A	not applicable or not measured

Calibration is Performed According to the Following Standards:

a) IEEE Std 1528-2013, "IEEE Recommended Practice for Determining the Peak Spatial-Averaged Specific Absorption Rate (SAR) in the Human Head from Wireless Communications Devices: Measurement Techniques", June 2013
b) IEC 62209-1, "Measurement procedure for the assessment of Specific Absorption Rate (SAR) from hand-held and body-mounted devices used next to the ear (frequency range of 300 MHz to 6 GHz)", July 2016
c) IEC 62209-2, "Procedure to determine the Specific Absorption Rate (SAR) for wireless communication devices used in close proximity to the human body (frequency range of 30 MHz to 6 GHz)", March 2010
d) KDB 865664, "SAR Measurement Requirements for 100 MHz to 6 GHz"

Additional Documentation:

e) DASY4/5 System Handbook

Methods Applied and Interpretation of Parameters:

- *Measurement Conditions:* Further details are available from the Validation Report at the end of the certificate. All figures stated in the certificate are valid at the frequency indicated.
- *Antenna Parameters with TSL:* The dipole is mounted with the spacer to position its feed point exactly below the center marking of the flat phantom section, with the arms oriented parallel to the body axis.
- *Feed Point Impedance and Return Loss:* These parameters are measured with the dipole positioned under the liquid filled phantom. The impedance stated is transformed from the measurement at the SMA connector to the feed point. The Return Loss ensures low reflected power. No uncertainty required.
- *Electrical Delay:* One-way delay between the SMA connector and the antenna feed point. No uncertainty required.
- *SAR measured:* SAR measured at the stated antenna input power.
- *SAR normalized:* SAR as measured, normalized to an input power of 1 W at the antenna connector.
- *SAR for nominal TSL parameters:* The measured TSL parameters are used to calculate the nominal SAR result.

The reported uncertainty of measurement is stated as the standard uncertainty of measurement multiplied by the coverage factor k=2, which for a normal distribution corresponds to a coverage probability of approximately 95%.

Unless otherwise stated the results shown in this test report refer only to the sample(s) tested and such sample(s) are retained for 90 days only.
除非另有說明，此報告結果僅對測試之樣品負責，同時此樣品僅保留90天。本報告未經本公司書面許可，不可部份複製。
This document is issued by the Company subject to its General Conditions of Service printed overleaf, available on request or accessible at http://www.sgs.com.tw/Terms-and-Conditions and for electronic format documents, subject to Terms and Conditions for Electronic Documents at http://www.sgs.com.tw/Terms-and-Conditions. Attention is drawn to the limitation of liability, indemnification and jurisdiction issues defined therein. Any holder of this document is advised that information contained hereon reflects the Company's findings at the time of its intervention only and within the limits of Client's instructions, if any. The Company's sole responsibility is to its Client and this document does not exonerate parties to a transaction from exercising all their rights and obligations under the transaction documents. This document cannot be reproduced except in full, without prior written approval of the Company. Any unauthorized alteration, forgery or falsification of the content or appearance of this document is unlawful and offenders may be prosecuted to the fullest extent of the law.

Measurement Conditions

DASY system configuration, as far as not given on page 1.

DASY Version	DASY5	V52.10.4
Extrapolation	Advanced Extrapolation	
Phantom	Modular Flat Phantom	
Distance Dipole Center - TSL	10 mm	with Spacer
Zoom Scan Resolution	dx, dy, dz = 5 mm	
Frequency	2450 MHz ± 1 MHz	

Head TSL parameters

The following parameters and calculations were applied.

	Temperature	**Permittivity**	**Conductivity**
Nominal Head TSL parameters	22.0 °C	39.2	1.80 mho/m
Measured Head TSL parameters	(22.0 ± 0.2) °C	38.6 ± 6 %	1.86 mho/m ± 6 %
Head TSL temperature change during test	< 0.5 °C	----	----

SAR result with Head TSL

SAR averaged over 1 cm³ (1 g) of Head TSL	Condition	
SAR measured	250 mW input power	13.4 W/kg
SAR for nominal Head TSL parameters	normalized to 1W	**52.6 W/kg ± 17.0 % (k=2)**

SAR averaged over 10 cm³ (10 g) of Head TSL	condition	
SAR measured	250 mW input power	6.23 W/kg
SAR for nominal Head TSL parameters	normalized to 1W	**24.7 W/kg ± 16.5 % (k=2)**

Unless otherwise stated the results shown in this test report refer only to the sample(s) tested and such sample(s) are retained for 90 days only.
除非另有說明，此報告結果僅對測試之樣品負責，同時此樣品僅保留90天。本報告未經本公司書面許可，不可部份複製。
This document is issued by the Company subject to its General Conditions of Service printed overleaf, available on request or accessible at http://www.sgs.com.tw/Terms-and-Conditions and for electronic format documents, subject to Terms and Conditions for Electronic Documents at http://www.sgs.com.tw/Terms-and-Conditions. Attention is drawn to the limitation of liability, indemnification and jurisdiction issues defined therein. Any holder of this document is advised that information contained hereon reflects the Company's findings at the time of its intervention only and within the limits of Client's instructions, if any. The Company's sole responsibility is to its Client and this document does not exonerate parties to a transaction from exercising all their rights and obligations under the transaction documents. This document cannot be reproduced except in full, without prior written approval of the Company. Any unauthorized alteration, forgery or falsification of the content or appearance of this document is unlawful and offenders may be prosecuted to the fullest extent of the law.

SGS Taiwan Ltd. 台灣檢驗科技股份有限公司
No.134,Wu Kung Road, New Taipei Industrial Park, Wuku District, New Taipei City, Taiwan/新北市五股區新北產業園區五工路 134 號
t (886-2) 2299-3279 f (886-2) 2298-0488 www.sgs.com.tw
Member of SGS Group

Appendix (Additional assessments outside the scope of SCS 0108)

Antenna Parameters with Head TSL

Impedance, transformed to feed point	56.0 Ω + 2.6 jΩ
Return Loss	- 24.1 dB

General Antenna Parameters and Design

Electrical Delay (one direction)	1.149 ns

After long term use with 100W radiated power, only a slight warming of the dipole near the feedpoint can be measured.

The dipole is made of standard semirigid coaxial cable. The center conductor of the feeding line is directly connected to the second arm of the dipole. The antenna is therefore short-circuited for DC-signals. On some of the dipoles, small end caps are added to the dipole arms in order to improve matching when loaded according to the position as explained in the "Measurement Conditions" paragraph. The SAR data are not affected by this change. The overall dipole length is still according to the Standard.
No excessive force must be applied to the dipole arms, because they might bend or the soldered connections near the feedpoint may be damaged.

Additional EUT Data

Manufactured by	SPEAG

Unless otherwise stated the results shown in this test report refer only to the sample(s) tested and such sample(s) are retained for 90 days only.
除非另有說明，此報告結果僅對測試之樣品負責，同時此樣品僅保留90天。本報告未經本公司書面許可，不可部份複製。
This document is issued by the Company subject to its General Conditions of Service printed overleaf, available on request or accessible at http://www.sgs.com.tw/Terms-and-Conditions and for electronic format documents, subject to Terms and Conditions for Electronic Documents at http://www.sgs.com.tw/Terms-and-Conditions. Attention is drawn to the limitation of liability, indemnification and jurisdiction issues defined therein. Any holder of this document is advised that information contained hereon reflects the Company's findings at the time of its intervention only and within the limits of Client's instructions, if any. The Company's sole responsibility is to its Client and this document does not exonerate parties to a transaction from exercising all their rights and obligations under the transaction documents. This document cannot be reproduced except in full, without prior written approval of the Company. Any unauthorized alteration, forgery or falsification of the content or appearance of this document is unlawful and offenders may be prosecuted to the fullest extent of the law.
SGS Taiwan Ltd. 台灣檢驗科技股份有限公司 | No.134,Wu Kung Road, New Taipei Industrial Park, Wuku District, New Taipei City, Taiwan/新北市五股區新北產業園區五工路 134 號
t (886-2) 2299-3279 f (886-2) 2298-0488 www.sgs.com.tw
Member of SGS Group

DASY5 Validation Report for Head TSL

Date: 22.04.2020

Test Laboratory: SPEAG, Zurich, Switzerland

DUT: Dipole 2450 MHz; Type: D2450V2; Serial: D2450V2 - SN:727

Communication System: UID 0 - CW; Frequency: 2450 MHz
Medium parameters used: f = 2450 MHz; σ = 1.86 S/m; ε_r = 38.6; ρ = 1000 kg/m^3
Phantom section: Flat Section
Measurement Standard: DASY5 (IEEE/IEC/ANSI C63.19-2011)

DASY52 Configuration:

- Probe: EX3DV4 - SN7349; ConvF(7.98, 7.98, 7.98) @ 2450 MHz; Calibrated: 31.12.2019
- Sensor-Surface: 1.4mm (Mechanical Surface Detection)
- Electronics: DAE4 Sn601; Calibrated: 27.12.2019
- Phantom: Flat Phantom 5.0 (front); Type: QD 000 P50 AA; Serial: 1001
- DASY52 52.10.4(1527); SEMCAD X 14.6.14(7483)

Dipole Calibration for Head Tissue/Pin=250 mW, d=10mm/Zoom Scan (7x7x7)/Cube 0:

Measurement grid: dx=5mm, dy=5mm, dz=5mm
Reference Value = 116.9 V/m; Power Drift = -0.03 dB
Peak SAR (extrapolated) = 26.1 W/kg
SAR(1 g) = 13.4 W/kg; SAR(10 g) = 6.23 W/kg
Smallest distance from peaks to all points 3 dB below = 9 mm
Ratio of SAR at M2 to SAR at M1 = 51.2%
Maximum value of SAR (measured) = 21.9 W/kg

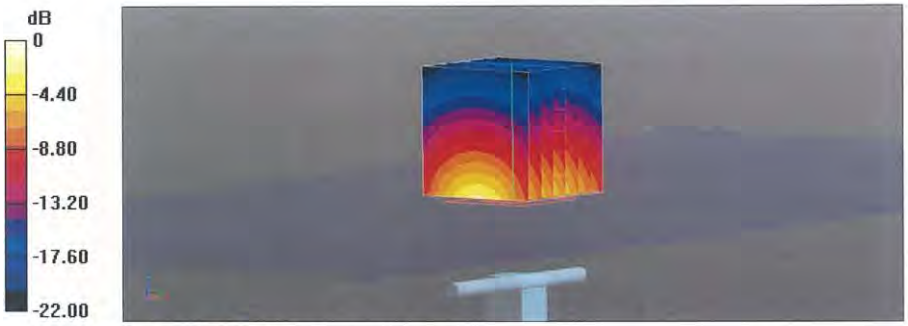

0 dB = 21.9 W/kg = 13.40 dBW/kg

Unless otherwise stated the results shown in this test report refer only to the sample(s) tested and such sample(s) are retained for 90 days only.
除非另有說明，此報告結果僅對測試之樣品負責，同時此樣品僅保留90天。本報告未經本公司書面許可，不可部份複製。
This document is issued by the Company subject to its General Conditions of Service printed overleaf, available on request or accessible at http://www.sgs.com.tw/Terms-and-Conditions and for electronic format documents, subject to Terms and Conditions for Electronic Documents at http://www.sgs.com.tw/Terms-and-Conditions. Attention is drawn to the limitation of liability, indemnification and jurisdiction issues defined therein. Any holder of this document is advised that information contained hereon reflects the Company's findings at the time of its intervention only and within the limits of Client's instructions, if any. The Company's sole responsibility is to its Client and this document does not exonerate parties to a transaction from exercising all their rights and obligations under the transaction documents. This document cannot be reproduced except in full, without prior written approval of the Company. Any unauthorized alteration, forgery or falsification of the content or appearance of this document is unlawful and offenders may be prosecuted to the fullest extent of the law.

SGS Taiwan Ltd. 台灣檢驗科技股份有限公司
No.134,Wu Kung Road, New Taipei Industrial Park, Wuku District, New Taipei City, Taiwan/新北市五股區新北產業園區五工路 134 號
t (886-2) 2299-3279 f (886-2) 2298-0488 www.sgs.com.tw
Member of SGS Group

Impedance Measurement Plot for Head TSL

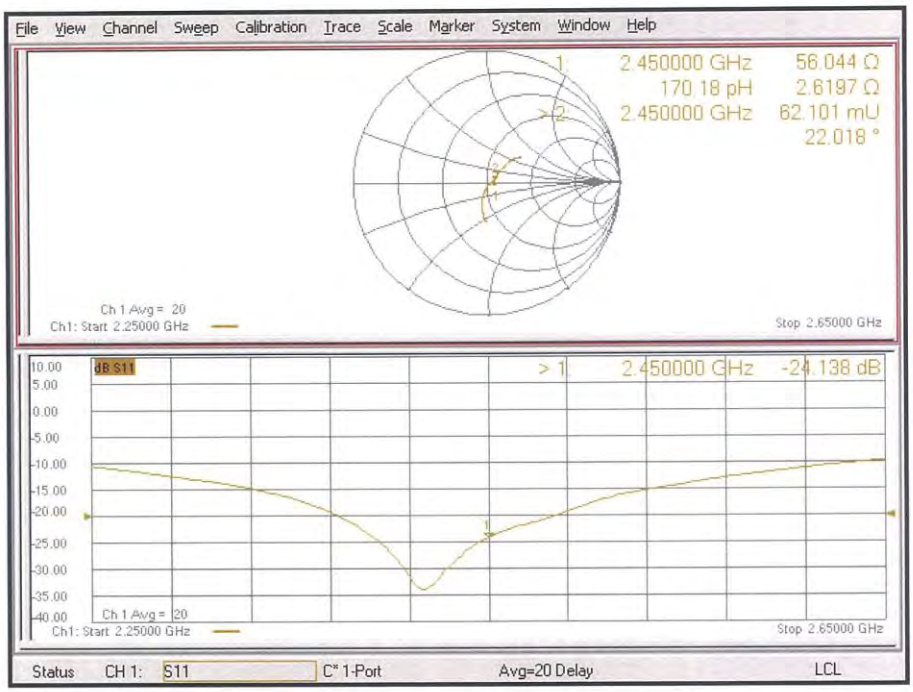

Unless otherwise stated the results shown in this test report refer only to the sample(s) tested and such sample(s) are retained for 90 days only.
除非另有說明，此報告結果僅對測試之樣品負責，同時此樣品僅保留90天。本報告未經本公司書面許可，不可部份複製。
This document is issued by the Company subject to its General Conditions of Service printed overleaf, available on request or accessible at http://www.sgs.com.tw/Terms-and-Conditions and for electronic format documents, subject to Terms and Conditions for Electronic Documents at http://www.sgs.com.tw/Terms-and-Conditions. Attention is drawn to the limitation of liability, indemnification and jurisdiction issues defined therein. Any holder of this document is advised that information contained hereon reflects the Company's findings at the time of its intervention only and within the limits of Client's instructions, if any. The Company's sole responsibility is to its Client and this document does not exonerate parties to a transaction from exercising all their rights and obligations under the transaction documents. This document cannot be reproduced except in full, without prior written approval of the Company. Any unauthorized alteration, forgery or falsification of the content or appearance of this document is unlawful and offenders may be prosecuted to the fullest extent of the law.

SGS Taiwan Ltd. 台灣檢驗科技股份有限公司
No.134,Wu Kung Road, New Taipei Industrial Park, Wuku District, New Taipei City, Taiwan/新北市五股區新北產業園區五工路 134 號
t (886-2) 2299-3279 f (886-2) 2298-0488 www.sgs.com.tw
Member of SGS Group

Impedance Measurement Plot for Head TSL

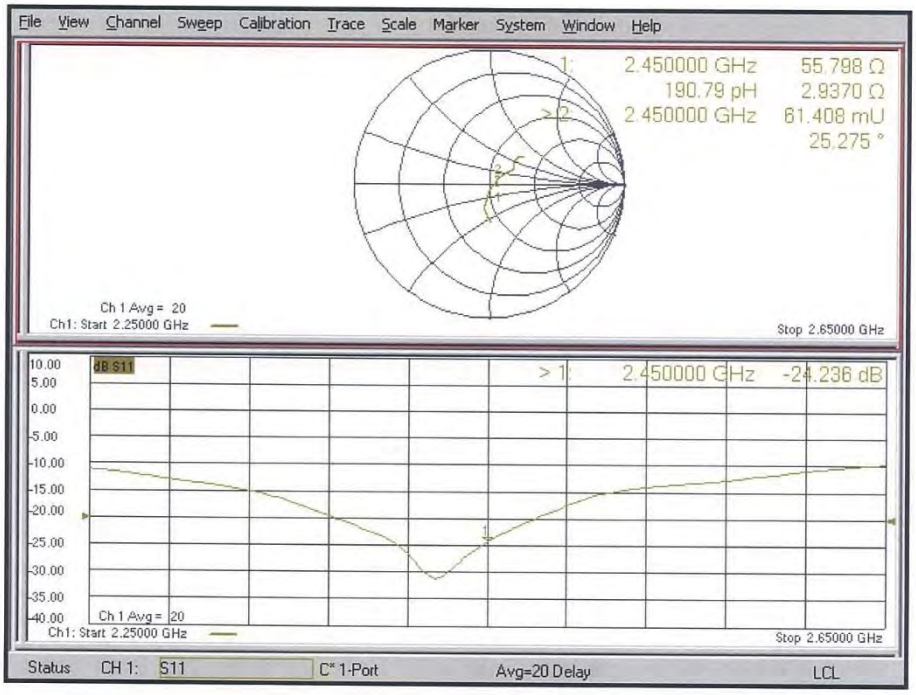

Unless otherwise stated the results shown in this test report refer only to the sample(s) tested and such sample(s) are retained for 90 days only.
除非另有說明，此報告結果僅對測試之樣品負責，同時此樣品僅保留90天。本報告未經本公司書面許可，不可部份複製。
This document is issued by the Company subject to its General Conditions of Service printed overleaf, available on request or accessible at http://www.sgs.com.tw/Terms-and-Conditions and for electronic format documents, subject to Terms and Conditions for Electronic Documents at http://www.sgs.com.tw/Terms-and-Conditions. Attention is drawn to the limitation of liability, indemnification and jurisdiction issues defined therein. Any holder of this document is advised that information contained hereon reflects the Company's findings at the time of its intervention only and within the limits of Client's instructions, if any. The Company's sole responsibility is to its Client and this document does not exonerate parties to a transaction from exercising all their rights and obligations under the transaction documents. This document cannot be reproduced except in full, without prior written approval of the Company. Any unauthorized alteration, forgery or falsification of the content or appearance of this document is unlawful and offenders may be prosecuted to the fullest extent of the law.

SGS Taiwan Ltd. 台灣檢驗科技股份有限公司
No.134,Wu Kung Road, New Taipei Industrial Park, Wuku District, New Taipei City, Taiwan/新北市五股區新北產業園區五工路 134 號
t (886-2) 2299-3279 f (886-2) 2298-0488 www.sgs.com.tw
Member of SGS Group

Calibration Laboratory of
Schmid & Partner
Engineering AG
Zeughausstrasse 43, 8004 Zurich, Switzerland

S Schweizerischer Kalibrierdienst
C Service suisse d'étalonnage
Servizio svizzero di taratura
S Swiss Calibration Service

Accredited by the Swiss Accreditation Service (SAS)
The Swiss Accreditation Service is one of the signatories to the EA Multilateral Agreement for the recognition of calibration certificates

Accreditation No.: SCS 0108

Client **SGS-TW (Auden)**

Certificate No: D5GHzV2-1023_Jan20

CALIBRATION CERTIFICATE

Object	D5GHzV2 - SN:1023
Calibration procedure(s)	QA CAL-22.v4 Calibration Procedure for SAR Validation Sources between 3-6 GHz
Calibration date:	January 28, 2020

This calibration certificate documents the traceability to national standards, which realize the physical units of measurements (SI).
The measurements and the uncertainties with confidence probability are given on the following pages and are part of the certificate.

All calibrations have been conducted in the closed laboratory facility: environment temperature (22 ± 3)°C and humidity < 70%.

Calibration Equipment used (M&TE critical for calibration)

Primary Standards	ID #	Cal Date (Certificate No.)	Scheduled Calibration
Power meter NRP	SN: 104778	03-Apr-19 (No. 217-02892/02893)	Apr-20
Power sensor NRP-Z91	SN: 103244	03-Apr-19 (No. 217-02892)	Apr-20
Power sensor NRP-Z91	SN: 103245	03-Apr-19 (No. 217-02893)	Apr-20
Reference 20 dB Attenuator	SN: 5058 (20k)	04-Apr-19 (No. 217-02894)	Apr-20
Type-N mismatch combination	SN: 5047.2 / 06327	04-Apr-19 (No. 217-02895)	Apr-20
Reference Probe EX3DV4	SN: 3503	31-Dec-19 (No. EX3-3503_Dec19)	Dec-20
DAE4	SN: 601	27-Dec-19 (No. DAE4-601_Dec19)	Dec-20

Secondary Standards	ID #	Check Date (in house)	Scheduled Check
Power meter E4419B	SN: GB39512475	30-Oct-14 (in house check Feb-19)	In house check: Oct-20
Power sensor HP 8481A	SN: US37292783	07-Oct-15 (in house check Oct-18)	In house check: Oct-20
Power sensor HP 8481A	SN: MY41092317	07-Oct-15 (in house check Oct-18)	In house check: Oct-20
RF generator R&S SMT-06	SN: 100972	15-Jun-15 (in house check Oct-18)	In house check: Oct-20
Network Analyzer Agilent E8358A	SN: US41080477	31-Mar-14 (in house check Oct-19)	In house check: Oct-20

	Name	Function	Signature
Calibrated by:	Leif Klysner	Laboratory Technician	
Approved by:	Katja Pokovic	Technical Manager	

Issued: February 5, 2020

This calibration certificate shall not be reproduced except in full without written approval of the laboratory.

Unless otherwise stated the results shown in this test report refer only to the sample(s) tested and such sample(s) are retained for 90 days only.
除非另有說明，此報告結果僅對測試之樣品負責，同時此樣品僅保留90天。本報告未經本公司書面許可，不可部份複製。
This document is issued by the Company subject to its General Conditions of Service printed overleaf, available on request or accessible at http://www.sgs.com.tw/Terms-and-Conditions and for electronic format documents, subject to Terms and Conditions for Electronic Documents at http://www.sgs.com.tw/Terms-and-Conditions. Attention is drawn to the limitation of liability, indemnification and jurisdiction issues defined therein. Any holder of this document is advised that information contained hereon reflects the Company's findings at the time of its intervention only and within the limits of Client's instructions, if any. The Company's sole responsibility is to its Client and this document does not exonerate parties to a transaction from exercising all their rights and obligations under the transaction documents. This document cannot be reproduced except in full, without prior written approval of the Company. Any unauthorized alteration, forgery or falsification of the content or appearance of this document is unlawful and offenders may be prosecuted to the fullest extent of the law.

Calibration Laboratory of
Schmid & Partner
Engineering AG
Zeughausstrasse 43, 8004 Zurich, Switzerland

S Schweizerischer Kalibrierdienst
C Service suisse d'étalonnage
Servizio svizzero di taratura
S Swiss Calibration Service

Accredited by the Swiss Accreditation Service (SAS)
The Swiss Accreditation Service is one of the signatories to the EA Multilateral Agreement for the recognition of calibration certificates

Accreditation No.: SCS 0108

Glossary:

TSL	tissue simulating liquid
ConvF	sensitivity in TSL / NORM x,y,z
N/A	not applicable or not measured

Calibration is Performed According to the Following Standards:

a) IEEE Std 1528-2013, "IEEE Recommended Practice for Determining the Peak Spatial-Averaged Specific Absorption Rate (SAR) in the Human Head from Wireless Communications Devices: Measurement Techniques", June 2013
b) IEC 62209-1, "Measurement procedure for the assessment of Specific Absorption Rate (SAR) from hand-held and body-mounted devices used next to the ear (frequency range of 300 MHz to 6 GHz)", July 2016
c) IEC 62209-2, "Procedure to determine the Specific Absorption Rate (SAR) for wireless communication devices used in close proximity to the human body (frequency range of 30 MHz to 6 GHz)", March 2010
d) KDB 865664, "SAR Measurement Requirements for 100 MHz to 6 GHz"

Additional Documentation:

e) DASY4/5 System Handbook

Methods Applied and Interpretation of Parameters:

- *Measurement Conditions:* Further details are available from the Validation Report at the end of the certificate. All figures stated in the certificate are valid at the frequency indicated.
- *Antenna Parameters with TSL:* The dipole is mounted with the spacer to position its feed point exactly below the center marking of the flat phantom section, with the arms oriented parallel to the body axis.
- *Feed Point Impedance and Return Loss:* These parameters are measured with the dipole positioned under the liquid filled phantom. The impedance stated is transformed from the measurement at the SMA connector to the feed point. The Return Loss ensures low reflected power. No uncertainty required.
- *Electrical Delay:* One-way delay between the SMA connector and the antenna feed point. No uncertainty required.
- *SAR measured:* SAR measured at the stated antenna input power.
- *SAR normalized:* SAR as measured, normalized to an input power of 1 W at the antenna connector.
- *SAR for nominal TSL parameters:* The measured TSL parameters are used to calculate the nominal SAR result.

The reported uncertainty of measurement is stated as the standard uncertainty of measurement multiplied by the coverage factor k=2, which for a normal distribution corresponds to a coverage probability of approximately 95%.

Unless otherwise stated the results shown in this test report refer only to the sample(s) tested and such sample(s) are retained for 90 days only.
除非另有說明，此報告結果僅對測試之樣品負責，同時此樣品僅保留90天。本報告未經本公司書面許可，不可部份複製。
This document is issued by the Company subject to its General Conditions of Service printed overleaf, available on request or accessible at http://www.sgs.com.tw/Terms-and-Conditions and for electronic format documents, subject to Terms and Conditions for Electronic Documents at http://www.sgs.com.tw/Terms-and-Conditions. Attention is drawn to the limitation of liability, indemnification and jurisdiction issues defined therein. Any holder of this document is advised that information contained hereon reflects the Company's findings at the time of its intervention only and within the limits of Client's instructions, if any. The Company's sole responsibility is to its Client and this document does not exonerate parties to a transaction from exercising all their rights and obligations under the transaction documents. This document cannot be reproduced except in full, without prior written approval of the Company. Any unauthorized alteration, forgery or falsification of the content or appearance of this document is unlawful and offenders may be prosecuted to the fullest extent of the law.

Measurement Conditions

DASY system configuration, as far as not given on page 1.

DASY Version	DASY5	V52.10.3
Extrapolation	Advanced Extrapolation	
Phantom	Modular Flat Phantom V5.0	
Distance Dipole Center - TSL	10 mm	with Spacer
Zoom Scan Resolution	dx, dy = 4.0 mm, dz = 1.4 mm	Graded Ratio = 1.4 (Z direction)
Frequency	5200 MHz ± 1 MHz 5300 MHz ± 1 MHz 5600 MHz ± 1 MHz 5800 MHz ± 1 MHz	

Head TSL parameters at 5200 MHz

The following parameters and calculations were applied.

	Temperature	**Permittivity**	**Conductivity**
Nominal Head TSL parameters	22.0 °C	36.0	4.66 mho/m
Measured Head TSL parameters	(22.0 ± 0.2) °C	35.3 ± 6 %	4.49 mho/m ± 6 %
Head TSL temperature change during test	< 0.5 °C	----	----

SAR result with Head TSL at 5200 MHz

SAR averaged over 1 cm³ (1 g) of Head TSL	Condition	
SAR measured	100 mW input power	8.05 W/kg
SAR for nominal Head TSL parameters	normalized to 1W	**80.1 W/kg ± 19.9 % (k=2)**

SAR averaged over 10 cm³ (10 g) of Head TSL	condition	
SAR measured	100 mW input power	2.28 W/kg
SAR for nominal Head TSL parameters	normalized to 1W	**22.7 W/kg ± 19.5 % (k=2)**

Unless otherwise stated the results shown in this test report refer only to the sample(s) tested and such sample(s) are retained for 90 days only.
除非另有說明，此報告結果僅對測試之樣品負責，同時此樣品僅保留90天。本報告未經本公司書面許可，不可部份複製。
This document is issued by the Company subject to its General Conditions of Service printed overleaf, available on request or accessible at http://www.sgs.com.tw/Terms-and-Conditions and for electronic format documents, subject to Terms and Conditions for Electronic Documents at http://www.sgs.com.tw/Terms-and-Conditions. Attention is drawn to the limitation of liability, indemnification and jurisdiction issues defined therein. Any holder of this document is advised that information contained hereon reflects the Company's findings at the time of its intervention only and within the limits of Client's instructions, if any. The Company's sole responsibility is to its Client and this document does not exonerate parties to a transaction from exercising all their rights and obligations under the transaction documents. This document cannot be reproduced except in full, without prior written approval of the Company. Any unauthorized alteration, forgery or falsification of the content or appearance of this document is unlawful and offenders may be prosecuted to the fullest extent of the law.

SGS Taiwan Ltd. 台灣檢驗科技股份有限公司
No.134,Wu Kung Road, New Taipei Industrial Park, Wuku District, New Taipei City, Taiwan/新北市五股區新北產業園區五工路 134 號
t (886-2) 2299-3279 f (886-2) 2298-0488 www.sgs.com.tw
Member of SGS Group

Head TSL parameters at 5300 MHz

The following parameters and calculations were applied.

	Temperature	Permittivity	Conductivity
Nominal Head TSL parameters	22.0 °C	35.9	4.76 mho/m
Measured Head TSL parameters	(22.0 ± 0.2) °C	35.2 ± 6 %	4.59 mho/m ± 6 %
Head TSL temperature change during test	< 0.5 °C	----	----

SAR result with Head TSL at 5300 MHz

SAR averaged over 1 cm³ (1 g) of Head TSL	Condition	
SAR measured	100 mW input power	8.32 W/kg
SAR for nominal Head TSL parameters	normalized to 1W	**82.8 W/kg ± 19.9 % (k=2)**

SAR averaged over 10 cm³ (10 g) of Head TSL	condition	
SAR measured	100 mW input power	2.35 W/kg
SAR for nominal Head TSL parameters	normalized to 1W	**23.4 W/kg ± 19.5 % (k=2)**

Head TSL parameters at 5600 MHz

The following parameters and calculations were applied.

	Temperature	Permittivity	Conductivity
Nominal Head TSL parameters	22.0 °C	35.5	5.07 mho/m
Measured Head TSL parameters	(22.0 ± 0.2) °C	34.8 ± 6 %	4.89 mho/m ± 6 %
Head TSL temperature change during test	< 0.5 °C	----	----

SAR result with Head TSL at 5600 MHz

SAR averaged over 1 cm³ (1 g) of Head TSL	Condition	
SAR measured	100 mW input power	8.36 W/kg
SAR for nominal Head TSL parameters	normalized to 1W	**83.1 W/kg ± 19.9 % (k=2)**

SAR averaged over 10 cm³ (10 g) of Head TSL	condition	
SAR measured	100 mW input power	2.37 W/kg
SAR for nominal Head TSL parameters	normalized to 1W	**23.5 W/kg ± 19.5 % (k=2)**

Unless otherwise stated the results shown in this test report refer only to the sample(s) tested and such sample(s) are retained for 90 days only.
除非另有說明，此報告結果僅對測試之樣品負責，同時此樣品僅保留90天。本報告未經本公司書面許可，不可部份複製。
This document is issued by the Company subject to its General Conditions of Service printed overleaf, available on request or accessible at http://www.sgs.com.tw/Terms-and-Conditions and for electronic format documents, subject to Terms and Conditions for Electronic Documents at http://www.sgs.com.tw/Terms-and-Conditions. Attention is drawn to the limitation of liability, indemnification and jurisdiction issues defined therein. Any holder of this document is advised that information contained hereon reflects the Company's findings at the time of its intervention only and within the limits of Client's instructions, if any. The Company's sole responsibility is to its Client and this document does not exonerate parties to a transaction from exercising all their rights and obligations under the transaction documents. This document cannot be reproduced except in full, without prior written approval of the Company. Any unauthorized alteration, forgery or falsification of the content or appearance of this document is unlawful and offenders may be prosecuted to the fullest extent of the law.

SGS Taiwan Ltd. 台灣檢驗科技股份有限公司
No.134,Wu Kung Road, New Taipei Industrial Park, Wuku District, New Taipei City, Taiwan/新北市五股區新北產業園區五工路 134 號
t (886-2) 2299-3279 f (886-2) 2298-0488 www.sgs.com.tw
Member of SGS Group

Head TSL parameters at 5800 MHz

The following parameters and calculations were applied.

	Temperature	Permittivity	Conductivity
Nominal Head TSL parameters	22.0 °C	35.3	5.27 mho/m
Measured Head TSL parameters	(22.0 ± 0.2) °C	34.5 ± 6 %	5.10 mho/m ± 6 %
Head TSL temperature change during test	< 0.5 °C	----	----

SAR result with Head TSL at 5800 MHz

SAR averaged over 1 cm³ (1 g) of Head TSL	Condition	
SAR measured	100 mW input power	8.19 W/kg
SAR for nominal Head TSL parameters	normalized to 1W	**81.4 W/kg ± 19.9 % (k=2)**

SAR averaged over 10 cm³ (10 g) of Head TSL	condition	
SAR measured	100 mW input power	2.29 W/kg
SAR for nominal Head TSL parameters	normalized to 1W	**22.7 W/kg ± 19.5 % (k=2)**

Unless otherwise stated the results shown in this test report refer only to the sample(s) tested and such sample(s) are retained for 90 days only.
除非另有說明，此報告結果僅對測試之樣品負責，同時此樣品僅保留90天。本報告未經本公司書面許可，不可部份複製。
This document is issued by the Company subject to its General Conditions of Service printed overleaf, available on request or accessible at http://www.sgs.com.tw/Terms-and-Conditions and for electronic format documents, subject to Terms and Conditions for Electronic Documents at http://www.sgs.com.tw/Terms-and-Conditions. Attention is drawn to the limitation of liability, indemnification and jurisdiction issues defined therein. Any holder of this document is advised that information contained hereon reflects the Company's findings at the time of its intervention only and within the limits of Client's instructions, if any. The Company's sole responsibility is to its Client and this document does not exonerate parties to a transaction from exercising all their rights and obligations under the transaction documents. This document cannot be reproduced except in full, without prior written approval of the Company. Any unauthorized alteration, forgery or falsification of the content or appearance of this document is unlawful and offenders may be prosecuted to the fullest extent of the law.

SGS Taiwan Ltd. 台灣檢驗科技股份有限公司
No.134,Wu Kung Road, New Taipei Industrial Park, Wuku District, New Taipei City, Taiwan/新北市五股區新北產業園區五工路 134 號
t (886-2) 2299-3279 f (886-2) 2298-0488 www.sgs.com.tw
Member of SGS Group

Appendix (Additional assessments outside the scope of SCS 0108)

Antenna Parameters with Head TSL at 5200 MHz

Impedance, transformed to feed point	50.6 Ω - 8.0 jΩ
Return Loss	- 22.0 dB

Antenna Parameters with Head TSL at 5300 MHz

Impedance, transformed to feed point	52.4 Ω - 4.7 jΩ
Return Loss	- 25.8 dB

Antenna Parameters with Head TSL at 5600 MHz

Impedance, transformed to feed point	55.9 Ω - 1.1 jΩ
Return Loss	- 25.0 dB

Antenna Parameters with Head TSL at 5800 MHz

Impedance, transformed to feed point	56.2 Ω + 2.9 jΩ
Return Loss	- 23.8 dB

General Antenna Parameters and Design

Electrical Delay (one direction)	1.199 ns

After long term use with 100W radiated power, only a slight warming of the dipole near the feedpoint can be measured.

The dipole is made of standard semirigid coaxial cable. The center conductor of the feeding line is directly connected to the second arm of the dipole. The antenna is therefore short-circuited for DC-signals. On some of the dipoles, small end caps are added to the dipole arms in order to improve matching when loaded according to the position as explained in the "Measurement Conditions" paragraph. The SAR data are not affected by this change. The overall dipole length is still according to the Standard.
No excessive force must be applied to the dipole arms, because they might bend or the soldered connections near the feedpoint may be damaged.

Additional EUT Data

Manufactured by	SPEAG

Unless otherwise stated the results shown in this test report refer only to the sample(s) tested and such sample(s) are retained for 90 days only.
除非另有說明，此報告結果僅對測試之樣品負責，同時此樣品僅保留90天。本報告未經本公司書面許可，不可部份複製。
This document is issued by the Company subject to its General Conditions of Service printed overleaf, available on request or accessible at http://www.sgs.com.tw/Terms-and-Conditions and for electronic format documents, subject to Terms and Conditions for Electronic Documents at http://www.sgs.com.tw/Terms-and-Conditions. Attention is drawn to the limitation of liability, indemnification and jurisdiction issues defined therein. Any holder of this document is advised that information contained hereon reflects the Company's findings at the time of its intervention only and within the limits of Client's instructions, if any. The Company's sole responsibility is to its Client and this document does not exonerate parties to a transaction from exercising all their rights and obligations under the transaction documents. This document cannot be reproduced except in full, without prior written approval of the Company. Any unauthorized alteration, forgery or falsification of the content or appearance of this document is unlawful and offenders may be prosecuted to the fullest extent of the law.
SGS Taiwan Ltd. 台灣檢驗科技股份有限公司 | No.134,Wu Kung Road, New Taipei Industrial Park, Wuku District, New Taipei City, Taiwan/新北市五股區新北產業園區五工路 134 號
t (886-2) 2299-3279 f (886-2) 2298-0488 www.sgs.com.tw
Member of SGS Group

DASY5 Validation Report for Head TSL

Date: 28.01.2020

Test Laboratory: SPEAG, Zurich, Switzerland

DUT: Dipole D5GHzV2; Type: D5GHzV2; Serial: D5GHzV2 - SN: 1023

Communication System: UID 0 - CW; Frequency: 5200 MHz, Frequency: 5300 MHz, Frequency: 5600 MHz, Frequency: 5800 MHz
Medium parameters used: f = 5200 MHz; σ = 4.49 S/m; ε_r = 35.3; ρ = 1000 kg/m^3 ,
Medium parameters used: f = 5300 MHz; σ = 4.59 S/m; ε_r = 35.2; ρ = 1000 kg/m^3 ,
Medium parameters used: f = 5600 MHz; σ = 4.89 S/m; ε_r = 34.8; ρ = 1000 kg/m^3 ,
Medium parameters used: f = 5800 MHz; σ = 5.1 S/m; ε_r = 34.5; ρ = 1000 kg/m^3
Phantom section: Flat Section
Measurement Standard: DASY5 (IEEE/IEC/ANSI C63.19-2011)

DASY52 Configuration:

- Probe: EX3DV4 - SN3503; ConvF(5.8, 5.8, 5.8) @ 5200 MHz, ConvF(5.49, 5.49, 5.49) @ 5300 MHz, ConvF(5.1, 5.1, 5.1) @ 5600 MHz, ConvF(5.01, 5.01, 5.01) @ 5800 MHz; Calibrated: 31.12.2019
- Sensor-Surface: 1.4mm (Mechanical Surface Detection)
- Electronics: DAE4 Sn601; Calibrated: 27.12.2019
- Phantom: Flat Phantom 5.0 (front); Type: QD 000 P50 AA; Serial: 1001
- DASY52 52.10.3(1513); SEMCAD X 14.6.13(7474)

Dipole Calibration for Head Tissue/Pin=100mW, dist=10mm, f=5200 MHz/Zoom Scan, dist=1.4mm (8x8x7)/Cube 0: Measurement grid: dx=4mm, dy=4mm, dz=1.4mm
Reference Value = 77.00 V/m; Power Drift = -0.07 dB
Peak SAR (extrapolated) = 28.9 W/kg
SAR(1 g) = 8.05 W/kg; SAR(10 g) = 2.28 W/kg
Smallest distance from peaks to all points 3 dB below = 7.2 mm
Ratio of SAR at M2 to SAR at M1 = 68.9%
Maximum value of SAR (measured) = 18.6 W/kg

Dipole Calibration for Head Tissue/Pin=100mW, dist=10mm, f=5300 MHz/Zoom Scan, dist=1.4mm (8x8x7)/Cube 0: Measurement grid: dx=4mm, dy=4mm, dz=1.4mm
Reference Value = 77.20 V/m; Power Drift = -0.04 dB
Peak SAR (extrapolated) = 30.2 W/kg
SAR(1 g) = 8.32 W/kg; SAR(10 g) = 2.35 W/kg
Smallest distance from peaks to all points 3 dB below = 7.2 mm
Ratio of SAR at M2 to SAR at M1 = 68.8%
Maximum value of SAR (measured) = 19.4 W/kg

Unless otherwise stated the results shown in this test report refer only to the sample(s) tested and such sample(s) are retained for 90 days only.
除非另有說明，此報告結果僅對測試之樣品負責，同時此樣品僅保留90天。本報告未經本公司書面許可，不可部份複製。
This document is issued by the Company subject to its General Conditions of Service printed overleaf, available on request or accessible at http://www.sgs.com.tw/Terms-and-Conditions and for electronic format documents, subject to Terms and Conditions for Electronic Documents at http://www.sgs.com.tw/Terms-and-Conditions. Attention is drawn to the limitation of liability, indemnification and jurisdiction issues defined therein. Any holder of this document is advised that information contained hereon reflects the Company's findings at the time of its intervention only and within the limits of Client's instructions, if any. The Company's sole responsibility is to its Client and this document does not exonerate parties to a transaction from exercising all their rights and obligations under the transaction documents. This document cannot be reproduced except in full, without prior written approval of the Company. Any unauthorized alteration, forgery or falsification of the content or appearance of this document is unlawful and offenders may be prosecuted to the fullest extent of the law.
SGS Taiwan Ltd. 台灣檢驗科技股份有限公司 | No.134,Wu Kung Road, New Taipei Industrial Park, Wuku District, New Taipei City, Taiwan/新北市五股區新北產業園區五工路 134 號
t (886-2) 2299-3279 f (886-2) 2298-0488 www.sgs.com.tw
Member of SGS Group

Dipole Calibration for Head Tissue/Pin=100mW, dist=10mm, f=5600 MHz/Zoom Scan, dist=1.4mm (8x8x7)/Cube 0: Measurement grid: dx=4mm, dy=4mm, dz=1.4mm
Reference Value = 77.04 V/m; Power Drift = -0.03 dB
Peak SAR (extrapolated) = 31.6 W/kg
SAR(1 g) = 8.36 W/kg; SAR(10 g) = 2.37 W/kg
Smallest distance from peaks to all points 3 dB below = 7.4 mm
Ratio of SAR at M2 to SAR at M1 = 67.1%
Maximum value of SAR (measured) = 19.9 W/kg

Dipole Calibration for Head Tissue/Pin=100mW, dist=10mm, f=5800 MHz/Zoom Scan, dist=1.4mm (8x8x7)/Cube 0: Measurement grid: dx=4mm, dy=4mm, dz=1.4mm
Reference Value = 75.51 V/m; Power Drift = -0.04 dB
Peak SAR (extrapolated) = 33.1 W/kg
SAR(1 g) = 8.19 W/kg; SAR(10 g) = 2.29 W/kg
Smallest distance from peaks to all points 3 dB below = 7.2 mm
Ratio of SAR at M2 to SAR at M1 = 65.2%
Maximum value of SAR (measured) = 19.8 W/kg

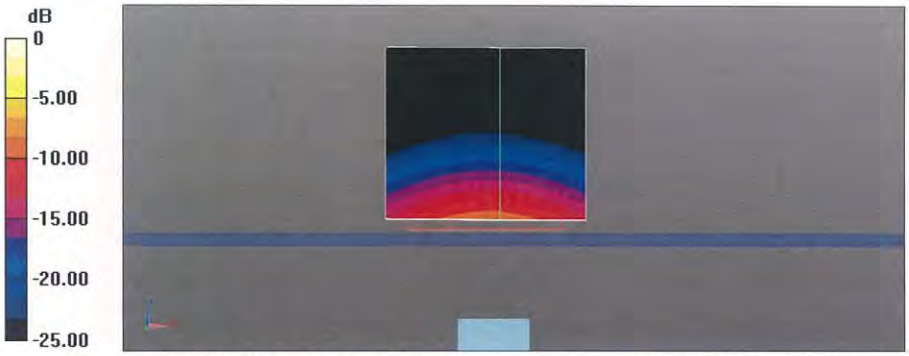

0 dB = 19.9 W/kg = 12.99 dBW/kg

Unless otherwise stated the results shown in this test report refer only to the sample(s) tested and such sample(s) are retained for 90 days only.
除非另有說明，此報告結果僅對測試之樣品負責，同時此樣品僅保留90天。本報告未經本公司書面許可，不可部份複製。
This document is issued by the Company subject to its General Conditions of Service printed overleaf, available on request or accessible at http://www.sgs.com.tw/Terms-and-Conditions and for electronic format documents, subject to Terms and Conditions for Electronic Documents at http://www.sgs.com.tw/Terms-and-Conditions. Attention is drawn to the limitation of liability, indemnification and jurisdiction issues defined therein. Any holder of this document is advised that information contained hereon reflects the Company's findings at the time of its intervention only and within the limits of Client's instructions, if any. The Company's sole responsibility is to its Client and this document does not exonerate parties to a transaction from exercising all their rights and obligations under the transaction documents. This document cannot be reproduced except in full, without prior written approval of the Company. Any unauthorized alteration, forgery or falsification of the content or appearance of this document is unlawful and offenders may be prosecuted to the fullest extent of the law.
SGS Taiwan Ltd. 台灣檢驗科技股份有限公司
No.134,Wu Kung Road, New Taipei Industrial Park, Wuku District, New Taipei City, Taiwan/新北市五股區新北產業園區五工路 134 號
t (886-2) 2299-3279 f (886-2) 2298-0488 www.sgs.com.tw
Member of SGS Group

Impedance Measurement Plot for Head TSL

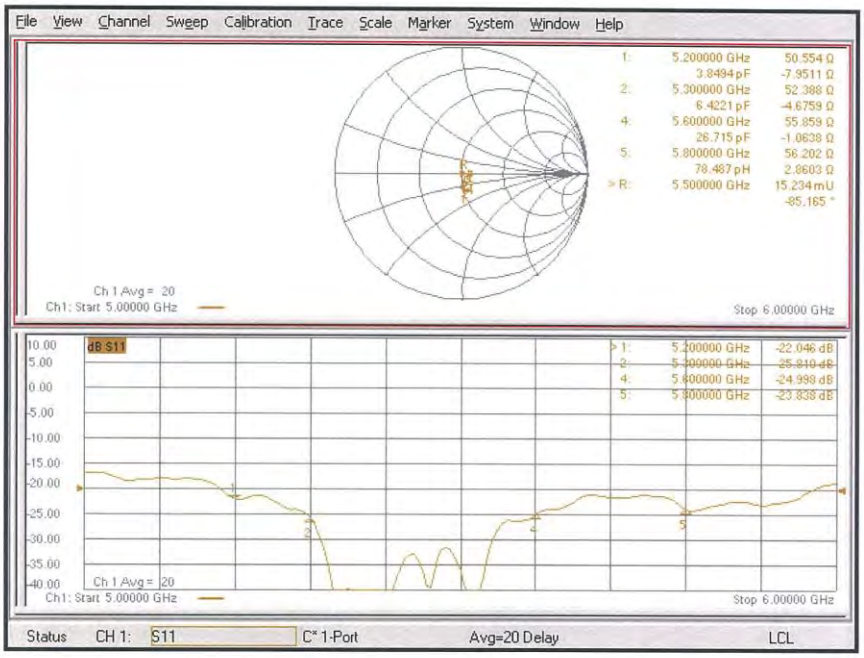

- End of report -

Unless otherwise stated the results shown in this test report refer only to the sample(s) tested and such sample(s) are retained for 90 days only.
除非另有說明，此報告結果僅對測試之樣品負責，同時此樣品僅保留90天。本報告未經本公司書面許可，不可部份複製。
This document is issued by the Company subject to its General Conditions of Service printed overleaf, available on request or accessible at http://www.sgs.com.tw/Terms-and-Conditions and for electronic format documents, subject to Terms and Conditions for Electronic Documents at http://www.sgs.com.tw/Terms-and-Conditions. Attention is drawn to the limitation of liability, indemnification and jurisdiction issues defined therein. Any holder of this document is advised that information contained hereon reflects the Company's findings at the time of its intervention only and within the limits of Client's instructions, if any. The Company's sole responsibility is to its Client and this document does not exonerate parties to a transaction from exercising all their rights and obligations under the transaction documents. This document cannot be reproduced except in full, without prior written approval of the Company. Any unauthorized alteration, forgery or falsification of the content or appearance of this document is unlawful and offenders may be prosecuted to the fullest extent of the law.

SGS Taiwan Ltd. 台灣檢驗科技股份有限公司
No.134,Wu Kung Road, New Taipei Industrial Park, Wuku District, New Taipei City, Taiwan/新北市五股區新北產業園區五工路 134 號
t (886-2) 2299-3279 f (886-2) 2298-0488 www.sgs.com.tw
Member of SGS Group