Product – Specification of the BMW ICON SF26 NC roof antenna 5A7F529

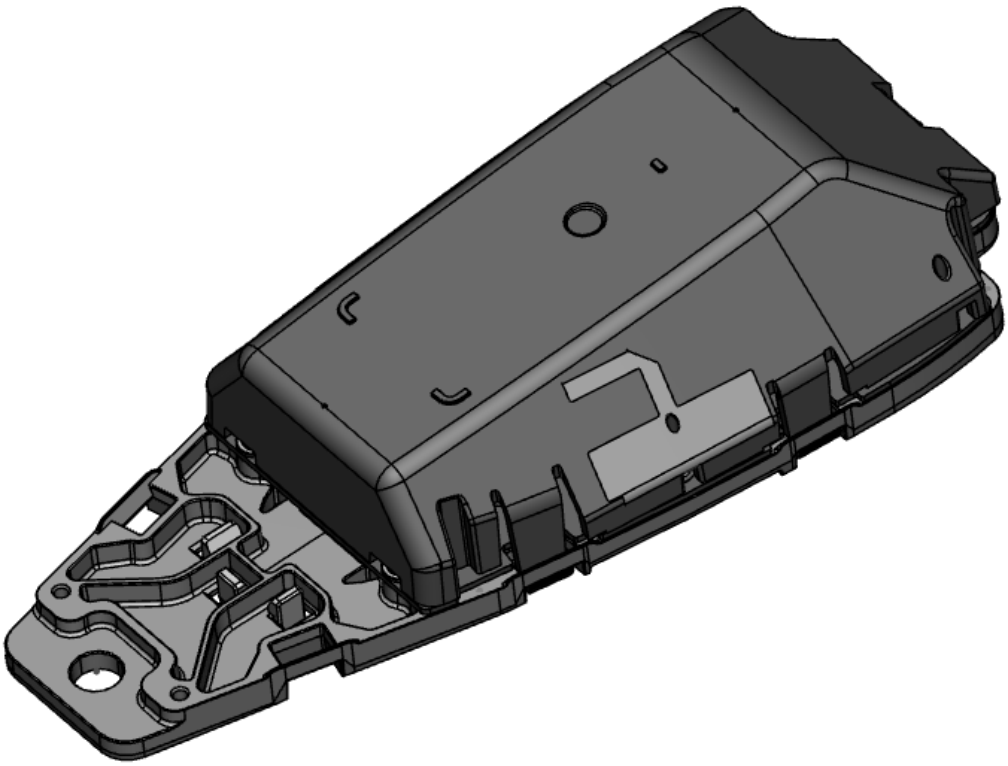

Molex Confidential Information
© Molex, LLC – All Rights Reserved.
Unauthorized Reproduction/Distribution is Prohibited.

Originator: Sven Schmidt (RF Eng.),
Vidyadhar Bhalchandra Kulkarni (Mech. Eng.)
Christiane Rother (Staff Eng.)

Approver: Ahmed Ameri (Eng. Dir.)

Location: Molex CVS Hildesheim GmbH

Molex Confidential Information
© Molex, LLC – All Rights Reserved.
Unauthorized Reproduction/Distribution is Prohibited.

Table of Content

1. Introduction 4
2. General Remarks 5
3. General Concept 6
3.1 Variants 7
3.2 Pin Definition 7
3.3 Mechanical Properties 8
3.4 Mechanical interface 9
3.5 Topology 10
4. Electrical properties 5A7F529 11
4.1 Measurement setup passive antennas (1 meter GND) 11
4.2 WiFi 1 2.4 & 5/6 GHz Peak Gain 13
4.2.1 Peak gain over Frequency 2,4 GHz 14
4.2.2 Peak gain over Frequency 5 GHz 14
4.2.3 Peak gain over Frequency 6 GHz 15
4.2.4 Radiation Pattern for Gain @ frequency range 2402 MHz -2483,5 MHz 15
4.2.5 Radiation Pattern for Gain @ frequency range 5150 MHz -5250 MHz 16
4.2.6 Radiation Pattern for Gain @ frequency range 5250 MHz -5350 MHz 16
4.2.7 Radiation Pattern for Gain @ frequency range 5470 MHz -5725 MHz 17
4.2.8 Radiation Pattern for Gain @ frequency range 5725 MHz -5850 MHz 17
4.2.9 Radiation Pattern for Gain @ frequency range 5925 MHz -6425 MHz 18
4.2.10 Radiation Pattern for Gain @ frequency range 6425 MHz -6525 MHz 18
4.2.11 Radiation Pattern for Gain @ frequency range 6525 MHz -6875 MHz 19
4.2.12 Radiation Pattern for Gain @ frequency range 6875 MHz -7125 MHz 19
4.3 WiFi 2 2.4 & 5/6 GHz Peak Gain 20
4.3.1 Peak gain over Frequency 2,4 GHz 21
4.3.2 Peak gain over Frequency 5 GHz 21
4.3.3 Peak gain over Frequency 6 GHz 22
4.3.4 Radiation Pattern for Gain @ frequency range 2402 MHz -2483,5 MHz 22
4.3.5 Radiation Pattern for Gain @ frequency range 5150 MHz -5250 MHz 23
4.3.6 Radiation Pattern for Gain @ frequency range 5250 MHz -5350 MHz 23
4.3.7 Radiation Pattern for Gain @ frequency range 5470 MHz -5725 MHz 24
4.3.8 Radiation Pattern for Gain @ frequency range 5725 MHz -5850 MHz 24
4.3.9 Radiation Pattern for Gain @ frequency range 5925 MHz -6425 MHz 25
4.3.10 Radiation Pattern for Gain @ frequency range 6425 MHz -6525 MHz 25
4.3.11 Radiation Pattern for Gain @ frequency range 6525 MHz -6875 MHz 26
4.3.12 Radiation Pattern for Gain @ frequency range 6875 MHz -7125 MHz 26

Molex Confidential Information
© Molex, LLC – All Rights Reserved.
Unauthorized Reproduction/Distribution is Prohibited.

1. INTRODUCTION

This document defines the specification for the variant of the BMW ICON SF26 roof antenna 5A7F529

Molex CVS products are directly delivered to OEMs automotive. The OEM is responsible for the assembly process of this products to the car. The end-user does not have to do any installations or adjustments.

Company	Molex CVS Hildesheim GmbH
Address	Daimlerring 31, D-31135 Hildesheim
Production site (address, country)	Molex CVS Shanghai, China

Molex Confidential Information
© Molex, LLC – All Rights Reserved.
Unauthorized Reproduction/Distribution is Prohibited.

2. GENERAL REMARKS

For all specified values appearing in this document, the following definitions are valid:

Min.: Minimal limit, minimal adjustable value of respective parameter

Nom.: Nominal or typical value of respective parameter with tolerance range at room temperature (25°C).
This tolerance range does not include the temperature response.

Max.: Maximal limit, maximal adjustable value of respective parameter

Design-range: This range defines the limits for all component parameters that must not be exceeded.
The Nominal – value must be chosen from within the Design – range.

Frequency-range: In this case the Min. and Max. value stands for that frequency-range within which the parameters, stated in this document, need to be met.

Molex Confidential Information
© Molex, LLC – All Rights Reserved.
Unauthorized Reproduction/Distribution is Prohibited.

3. GENERAL CONCEPT

NC -> Non Cellular

Homologation Number: DG70DA1B

Model: RAN-201

Type: RAN-201c

Molex Confidential Information
© Molex, LLC – All Rights Reserved.
Unauthorized Reproduction/Distribution is Prohibited.

3.1 Variants

Model	Type	Customer Part number	Molex Part number	Functions
RAN-201	RAN-201c	5A7F529	64187	GNSS L1 + L5; 2 x WiFi Dual 2.4 & 5/6 GHz;

3.2 Pin Definition

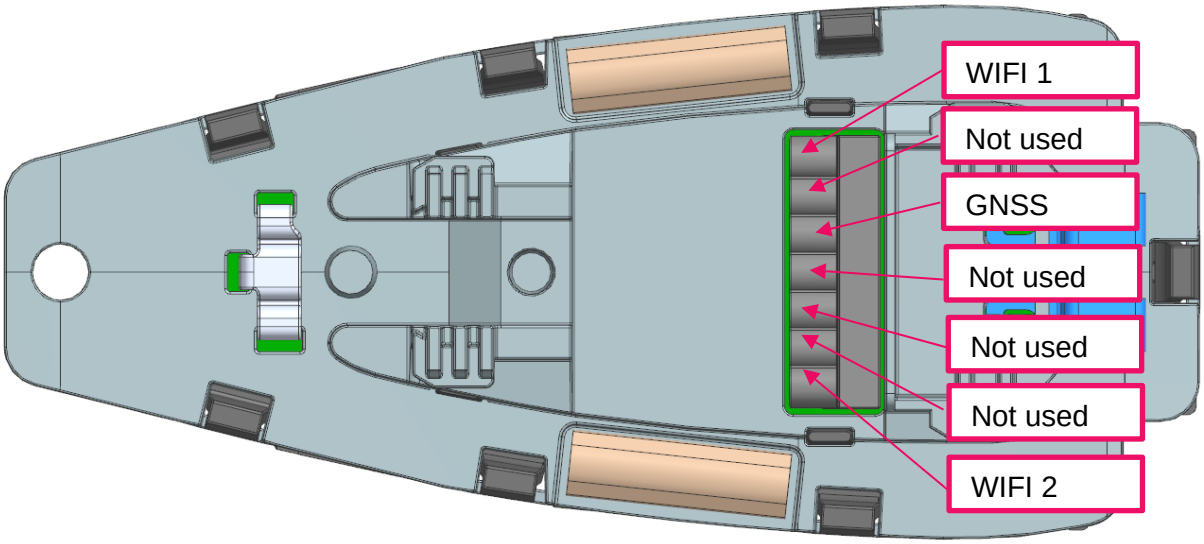

Figure 1: Pin definition

Molex Confidential Information
© Molex, LLC – All Rights Reserved.
Unauthorized Reproduction/Distribution is Prohibited.

3.3 Mechanical Properties

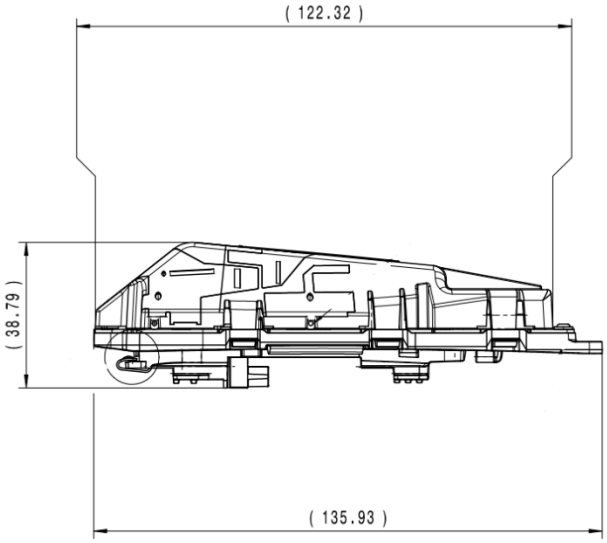

Figure 2: side view of antenna showing the length and height for variant 5A7F527

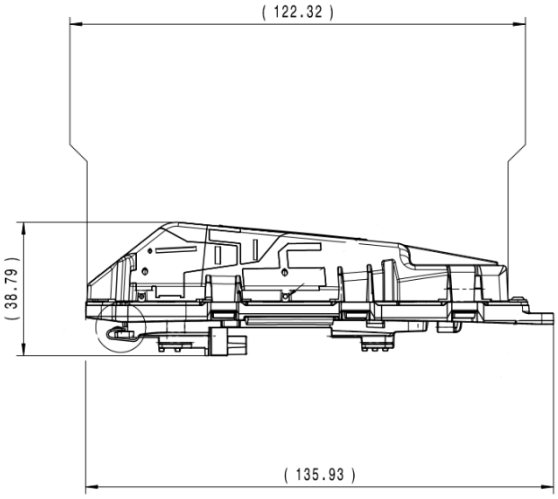

Figure 3: side view of antenna showing the length and height for variant 5A7F528 and 5A7F529

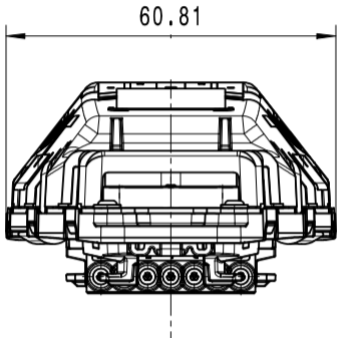

Figure 4: Front view of antenna showing the width for all three variants.

Molex Confidential Information
© Molex, LLC – All Rights Reserved.
Unauthorized Reproduction/Distribution is Prohibited.

3.4 Mechanical interface

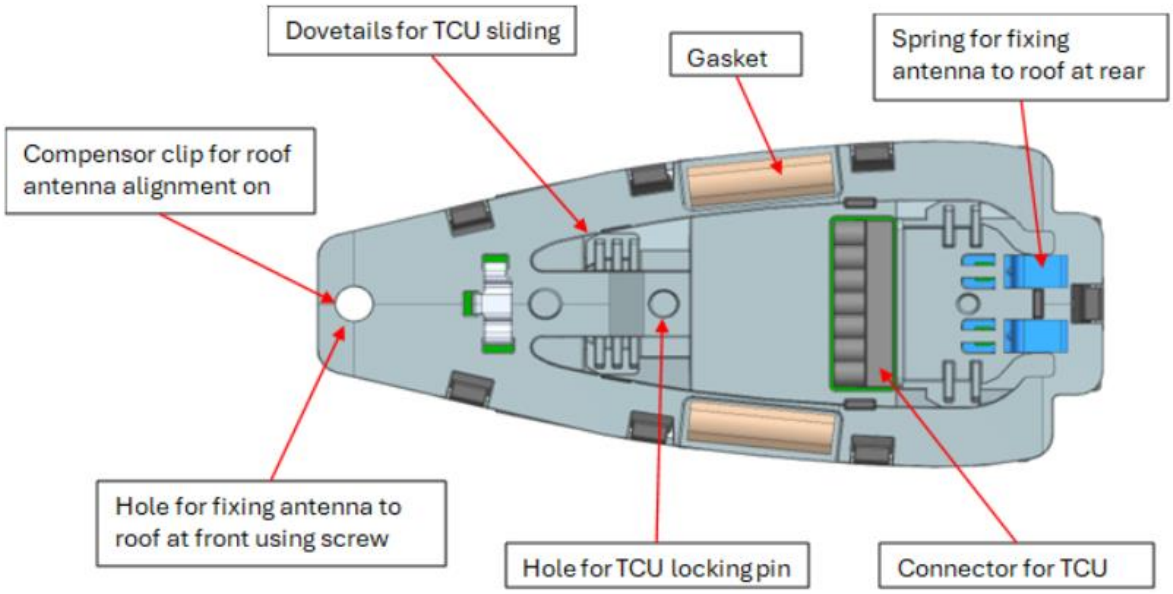

Figure 4: Mechanical interface.

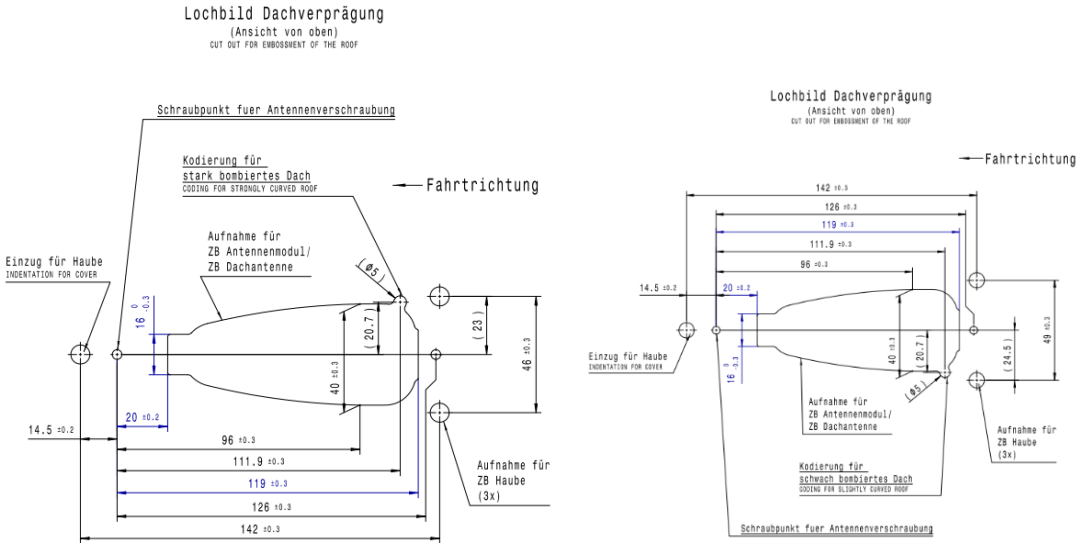

Figure 5: Roof hole

Sheet metal thickness: 0.6 to 1.8mm
Only on conductive metal roofs
Torque of the central screw for vehicle fixation: 4,0 Nm

Molex Confidential Information
© Molex, LLC – All Rights Reserved.
Unauthorized Reproduction/Distribution is Prohibited.

3.5 Topology

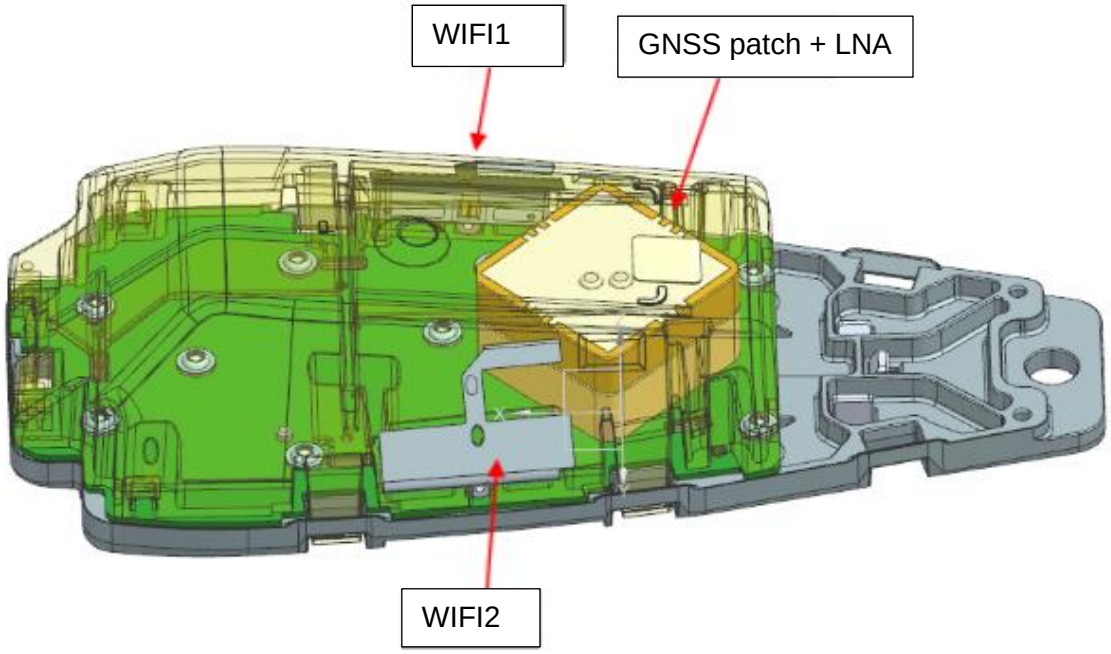

Figure 8: Topology side view of 5A7F529

Molex Confidential Information
© Molex, LLC – All Rights Reserved.
Unauthorized Reproduction/Distribution is Prohibited.

4. ELECTRICAL PROPERTIES 5A7F529

Unless otherwise stated, all data in this document apply for nominal requirements at 25°C.

Radiated measurements were done mounted on 1m ground plane

LNA measurements were done without housing and with SMA connector at the LNA input

4.1 Measurement setup passive antennas (1 meter GND)

Messprinzip	Art der Messstrecke	Nahfeld
	Entfernung DUT<-> Sendeantenne	Satimo Messraum Molex Hildesheim SG64
	Nah/Fernfeldtransformation	Ja
	Referenzdokument	

Messparameter	Wetterbedingungen	Innenraum
	Frequenzbereich	600 MHz – 6000 MHz
	Winkelbereich Elevation Azimuth	 0° bis 180° 0° - 360°
	Winkelschritte Elevation Azimuth	- 1° 1°
	Time Domain Gate Start,Gate Stop Gate Funktion Translated Spherical Wave Expansion Probe Pattern Compensation AnyGround	Nein Nein Nein Ja
	Ausgangsleistung	
	Gemessene Polarisationen	Vertikal / Horizontal

Molex Confidential Information
© Molex, LLC – All Rights Reserved.
Unauthorized Reproduction/Distribution is Prohibited.

Measuring principle	Type of Measurement	Near Field
	AUT<-> Sender Antenna	Satimo Measurement Chamber Molex Hildesheim SG3000
	Near /Far field transformation	Yes
	Reference document	

Measurement Parameters	Measurement Condition	Chamber Room
	Frequency Range	6,0 GHz – 7,15 GHz
	Angle Range Elevation Azimuth	 0° bis 180° 0° - 360°
	Angle Step Elevation Azimuth	- 1° 1°
	Time Domain Gate Start, Gate Stop Gate Function Translated Spherical Wave Expansion Probe Pattern Compensation AnyGround	No No No No
	Measured Polarisations	Vertical / Horizontal

Molex Confidential Information
© Molex, LLC – All Rights Reserved.
Unauthorized Reproduction/Distribution is Prohibited.

4.2 WiFi 1 2.4 & 5/6 GHz Peak Gain

Band	frequency band in MHz		maximum gain
	begin	end	in freq. band in dBi
2,4 GHz	**2402**	**2483,5**	**7,34**
U-NII-1	**5150**	**5250**	**8,03**
U-NII-2A	**5250**	**5350**	**9,19**
U-NII-2C	**5470**	**5725**	**8,28**
U-NII-3	**5725**	**5850**	**8,10**
U-NII-5	**5925**	**6425**	**8,13**
U-NII-6	**6425**	**6525**	**9,08**
U-NII-7	**6525**	**6875**	**10,25**
U-NII-8	**6875**	**7125**	**8,33**

Molex Confidential Information
© Molex, LLC – All Rights Reserved.
Unauthorized Reproduction/Distribution is Prohibited.

4.2.1 Peak gain over Frequency 2,4 GHz

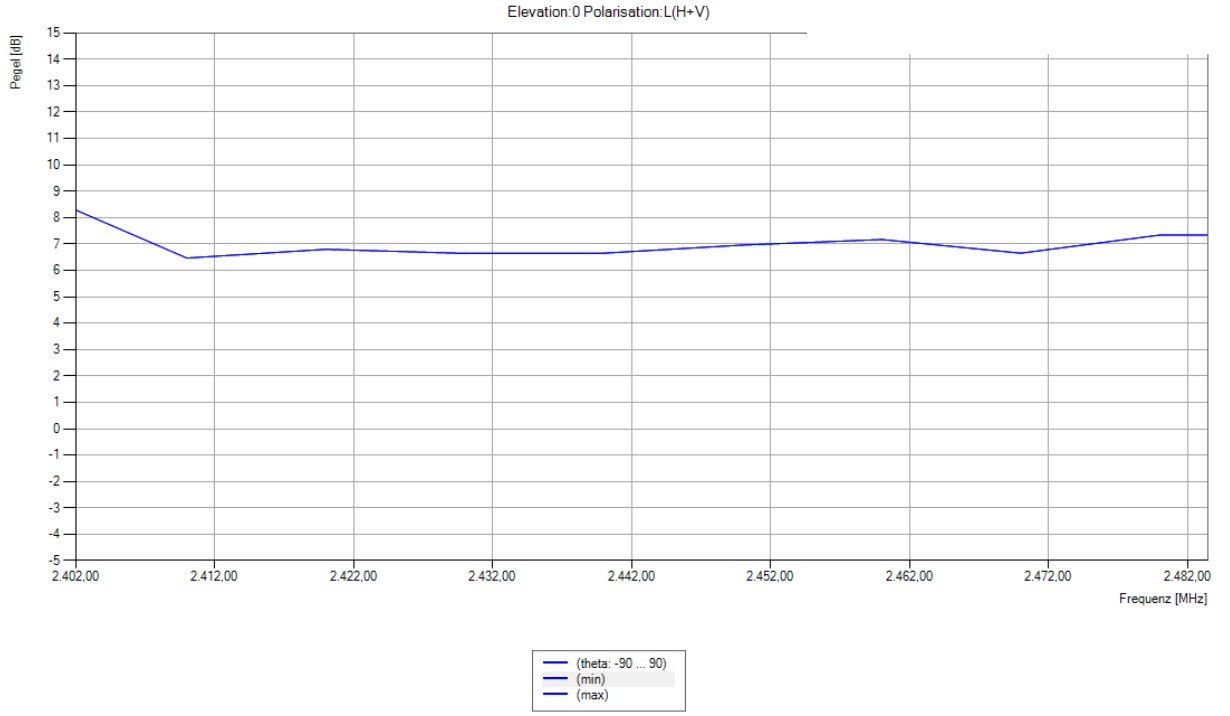

4.2.2 Peak gain over Frequency 5 GHz

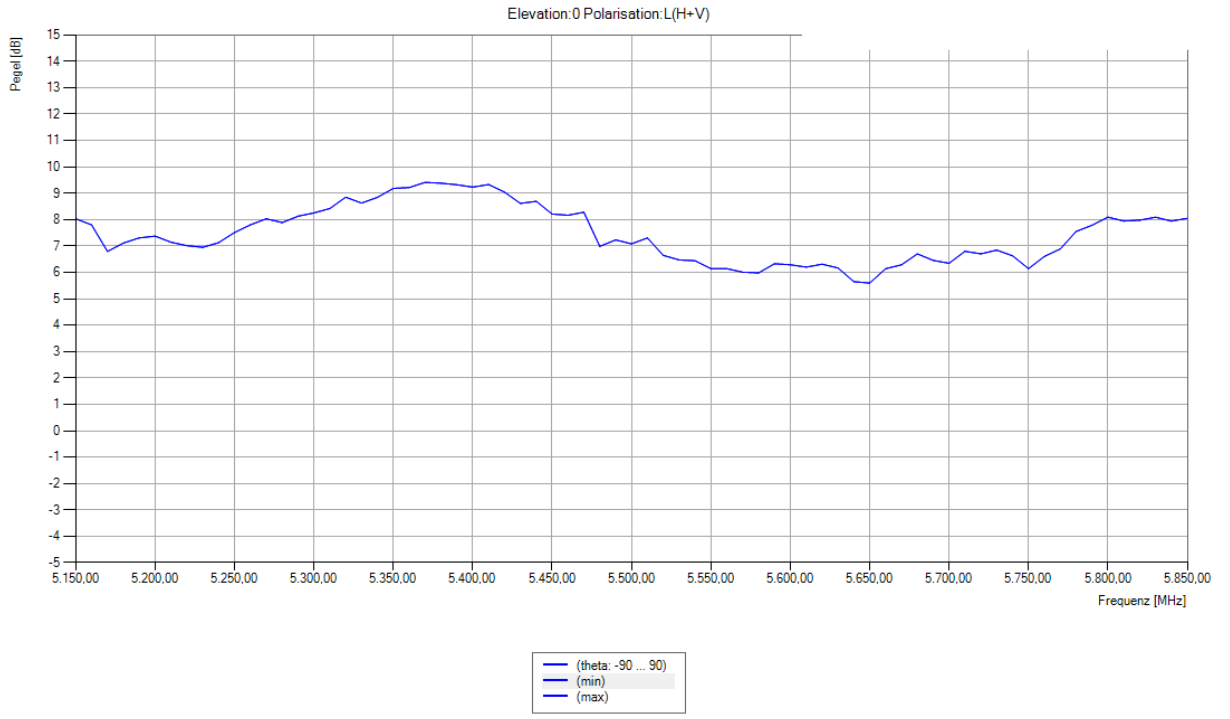

Molex Confidential Information
© Molex, LLC – All Rights Reserved.
Unauthorized Reproduction/Distribution is Prohibited.

4.2.3 Peak gain over Frequency 6 GHz

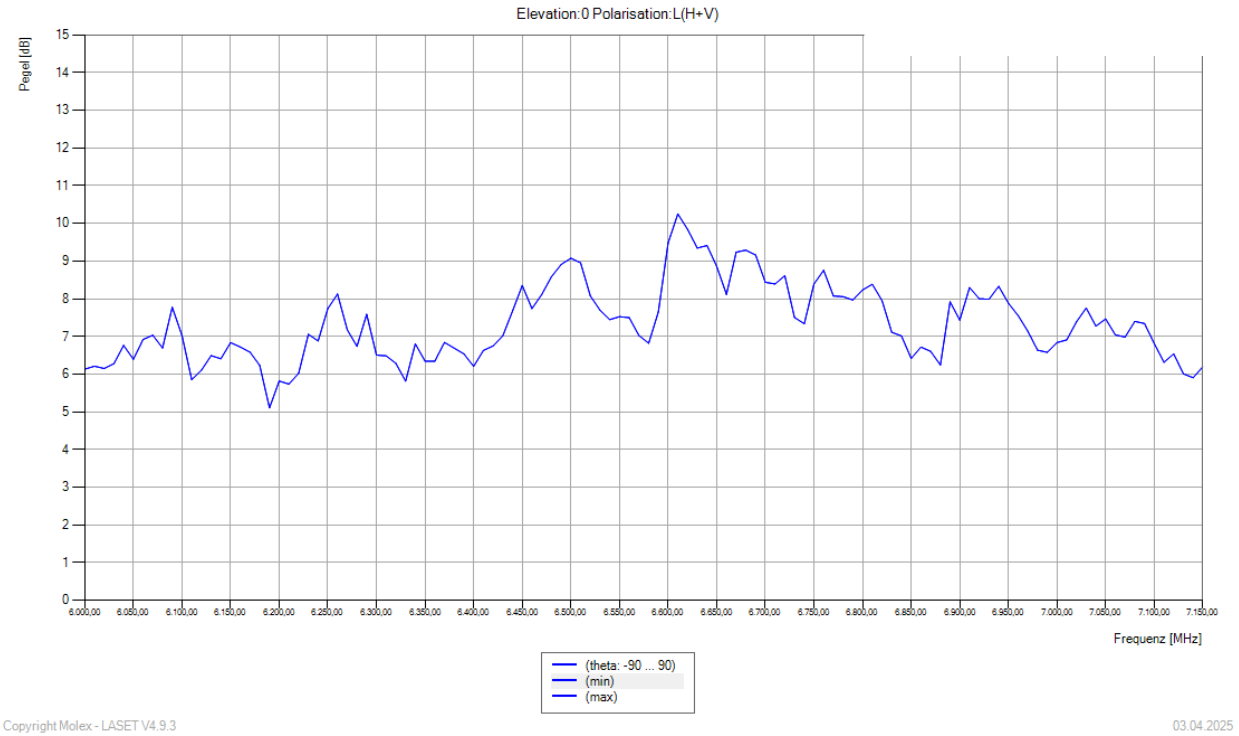

4.2.4 Radiation Pattern for Gain @ frequency range 2402 MHz -2483,5 MHz

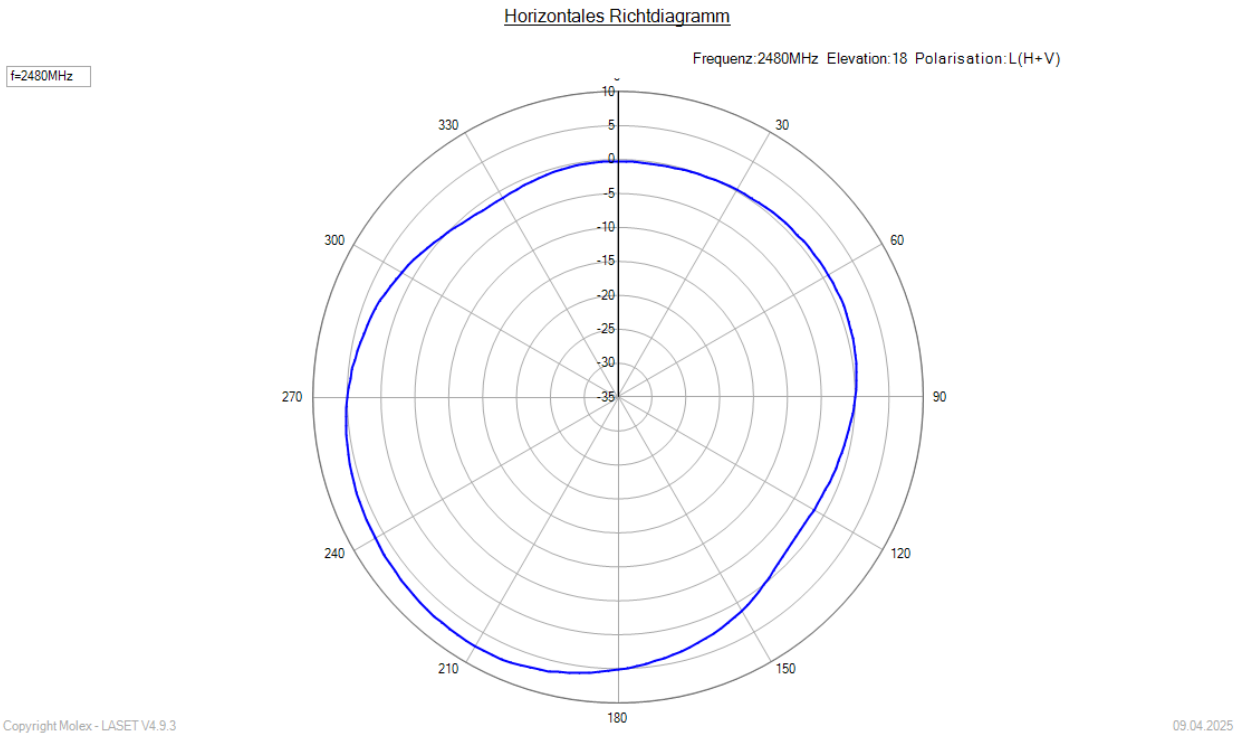

Molex Confidential Information
© Molex, LLC – All Rights Reserved.
Unauthorized Reproduction/Distribution is Prohibited.

4.2.5 Radiation Pattern for Gain @ frequency range 5150 MHz -5250 MHz

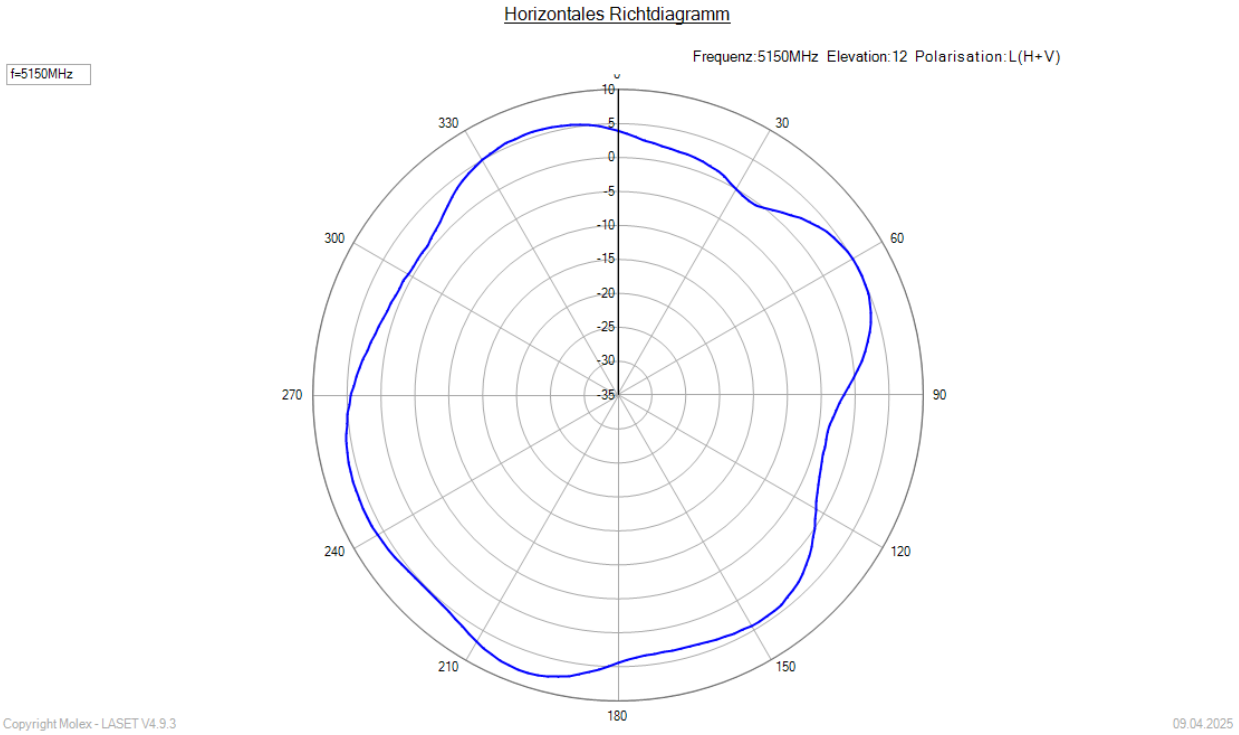

4.2.6 Radiation Pattern for Gain @ frequency range 5250 MHz -5350 MHz

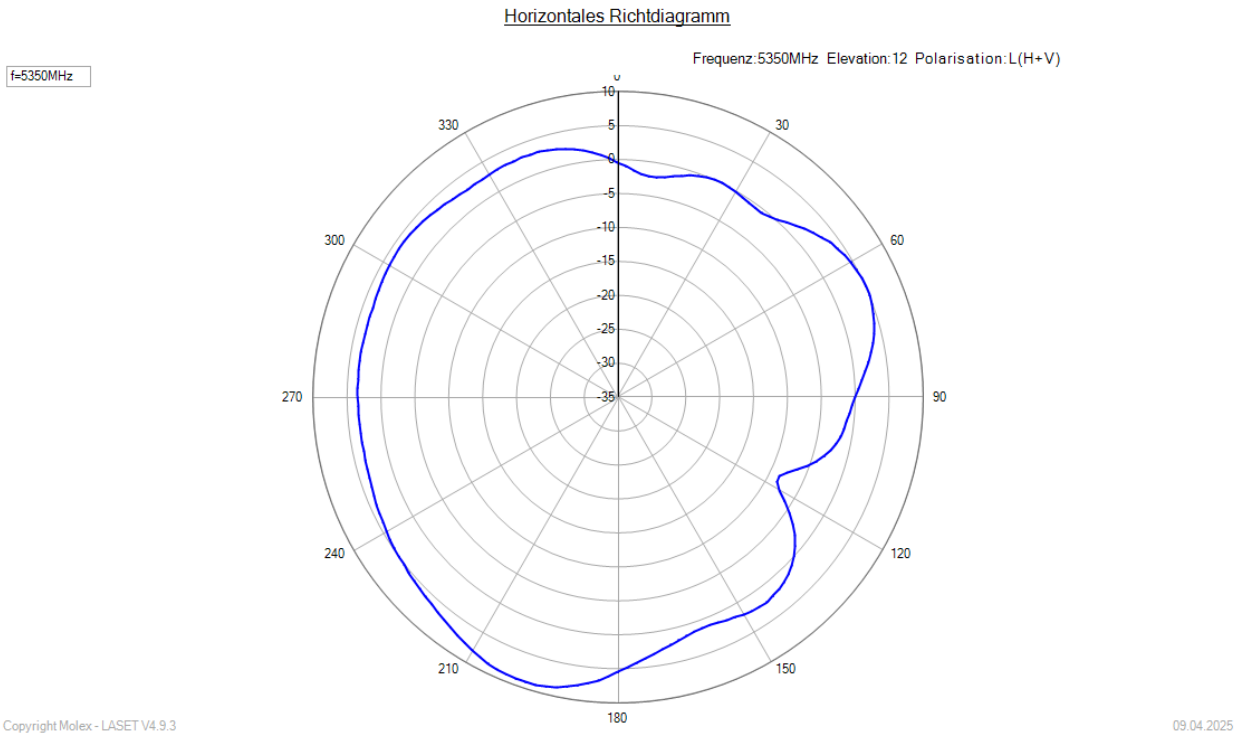

Molex Confidential Information
© Molex, LLC – All Rights Reserved.
Unauthorized Reproduction/Distribution is Prohibited.

4.2.7 Radiation Pattern for Gain @ frequency range 5470 MHz -5725 MHz

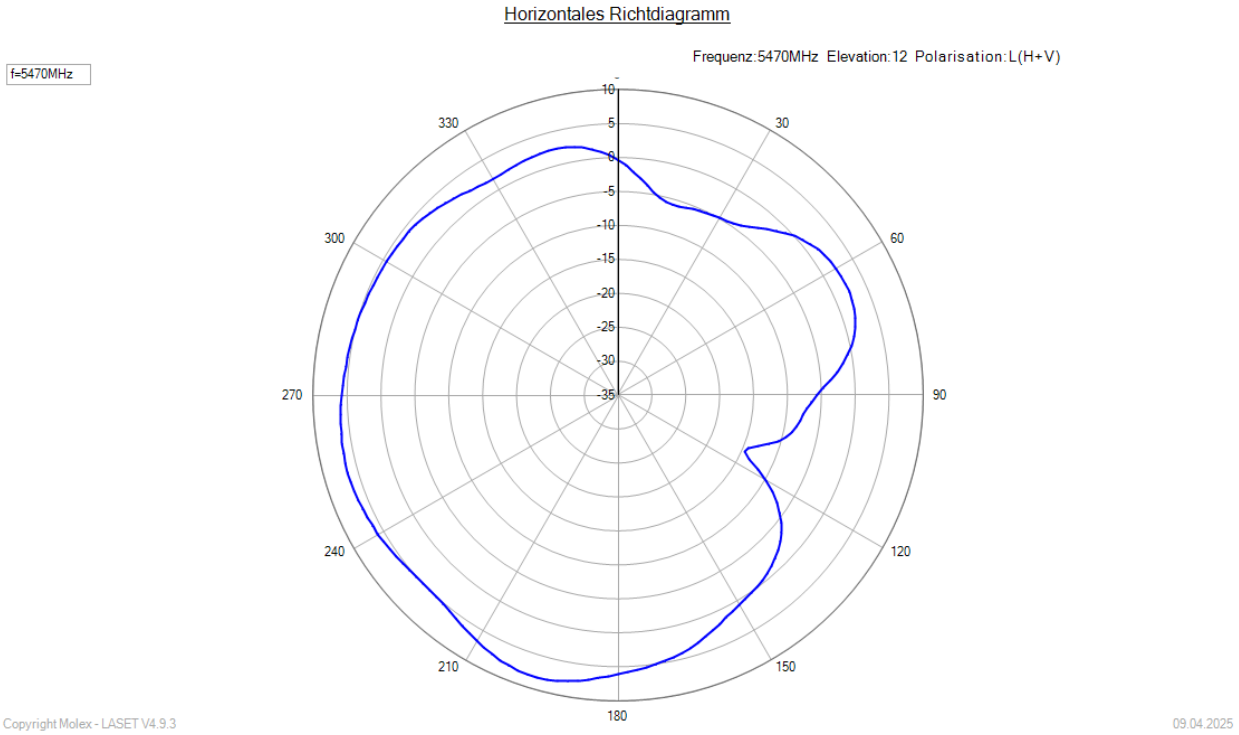

4.2.8 Radiation Pattern for Gain @ frequency range 5725 MHz -5850 MHz

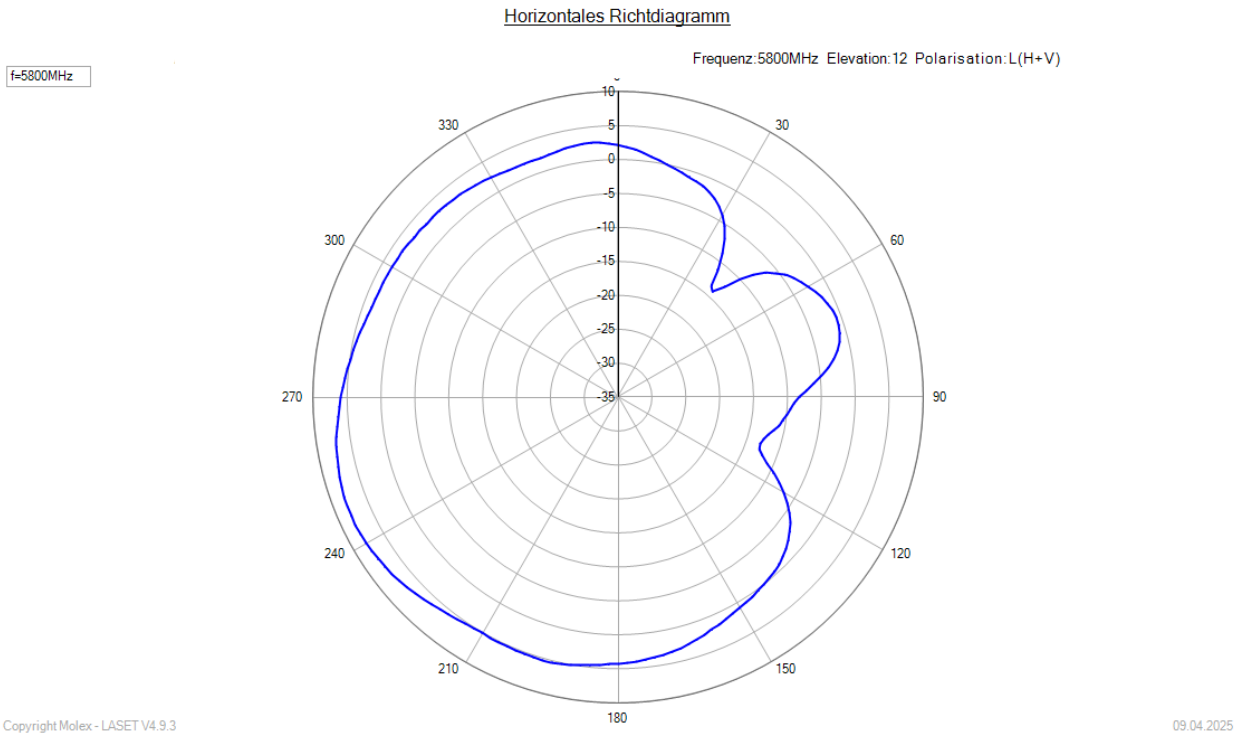

Molex Confidential Information
© Molex, LLC – All Rights Reserved.
Unauthorized Reproduction/Distribution is Prohibited.

4.2.9 Radiation Pattern for Gain @ frequency range 5925 MHz -6425 MHz

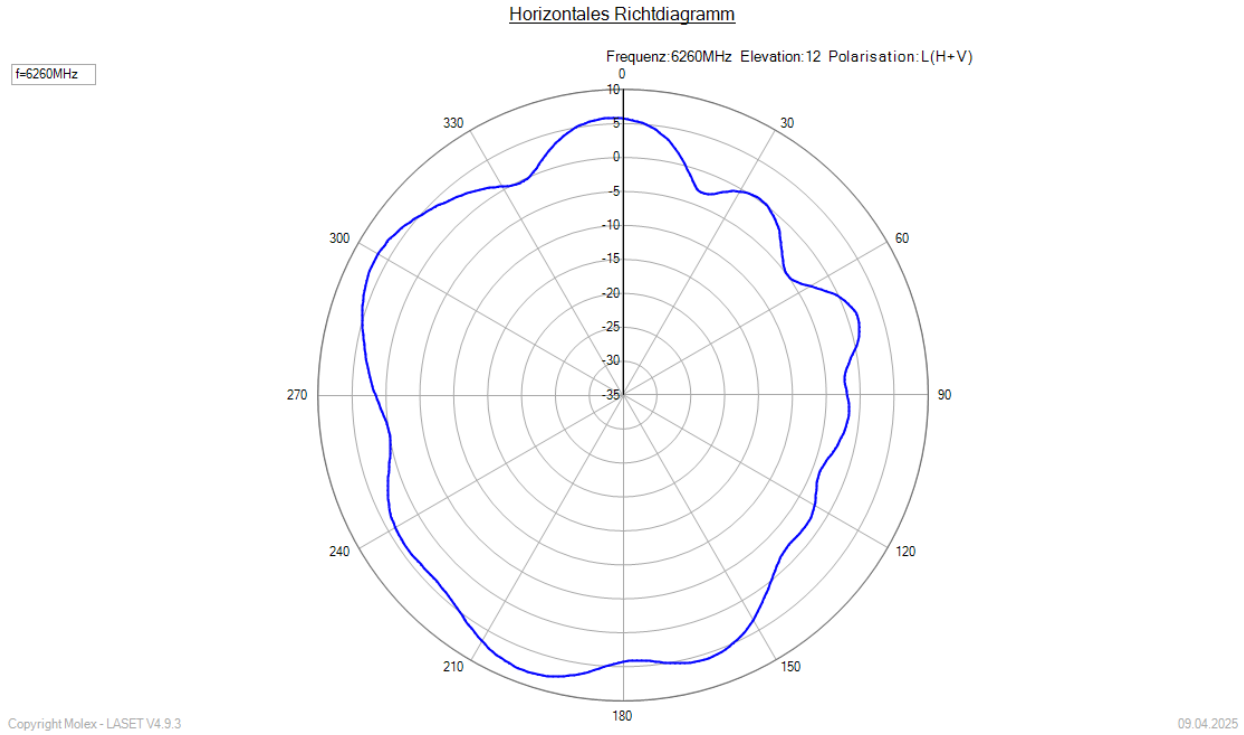

4.2.10 Radiation Pattern for Gain @ frequency range 6425 MHz -6525 MHz

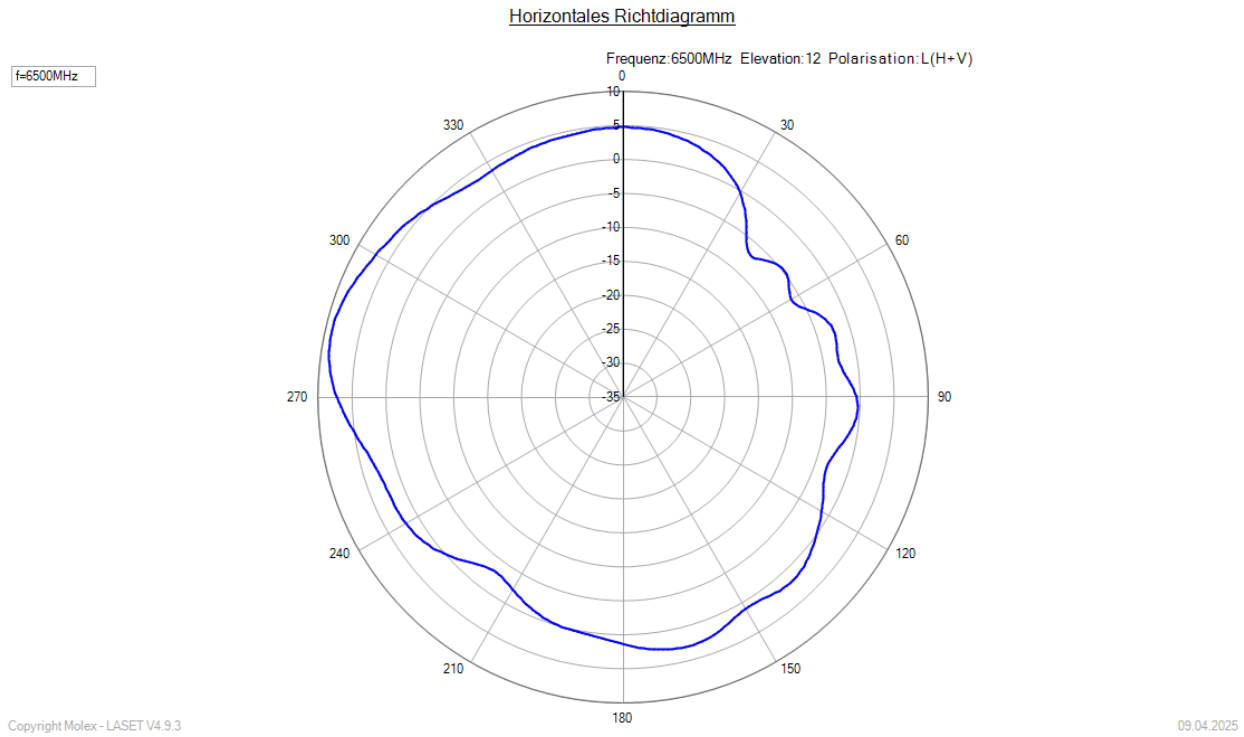

Molex Confidential Information
© Molex, LLC – All Rights Reserved.
Unauthorized Reproduction/Distribution is Prohibited.

4.2.11 Radiation Pattern for Gain @ frequency range 6525 MHz -6875 MHz

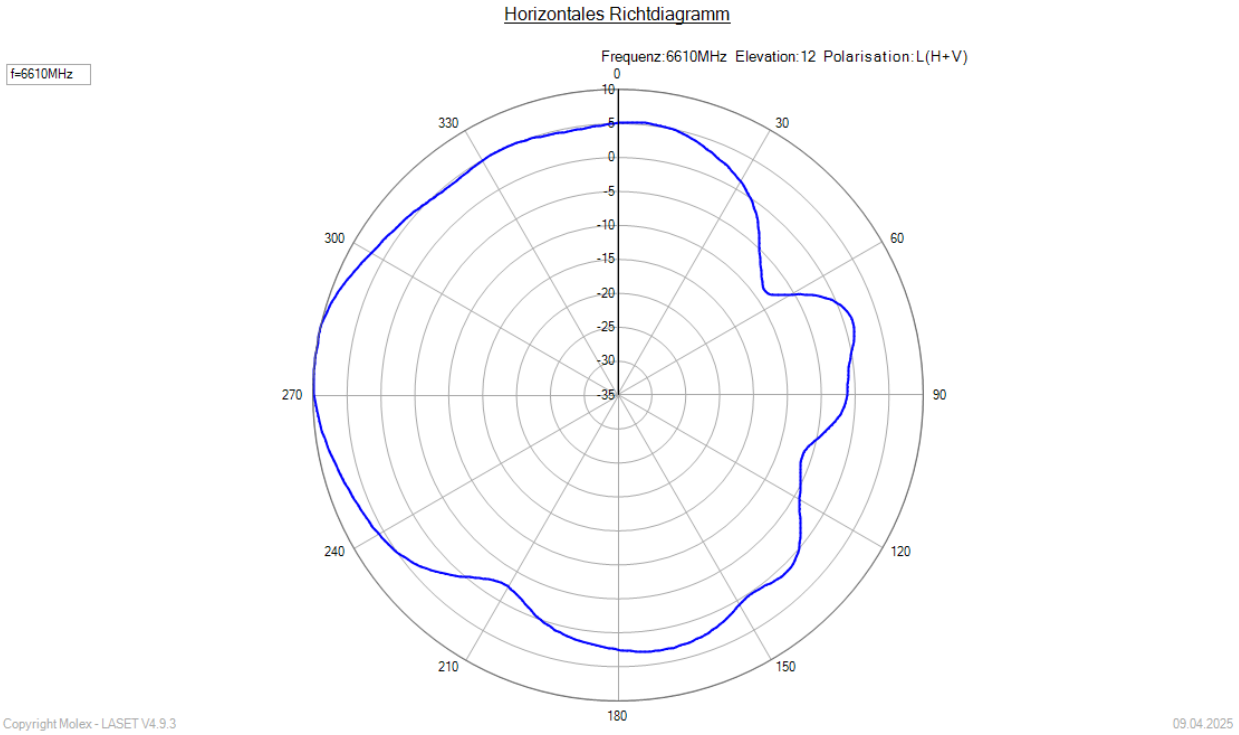

4.2.12 Radiation Pattern for Gain @ frequency range 6875 MHz -7125 MHz

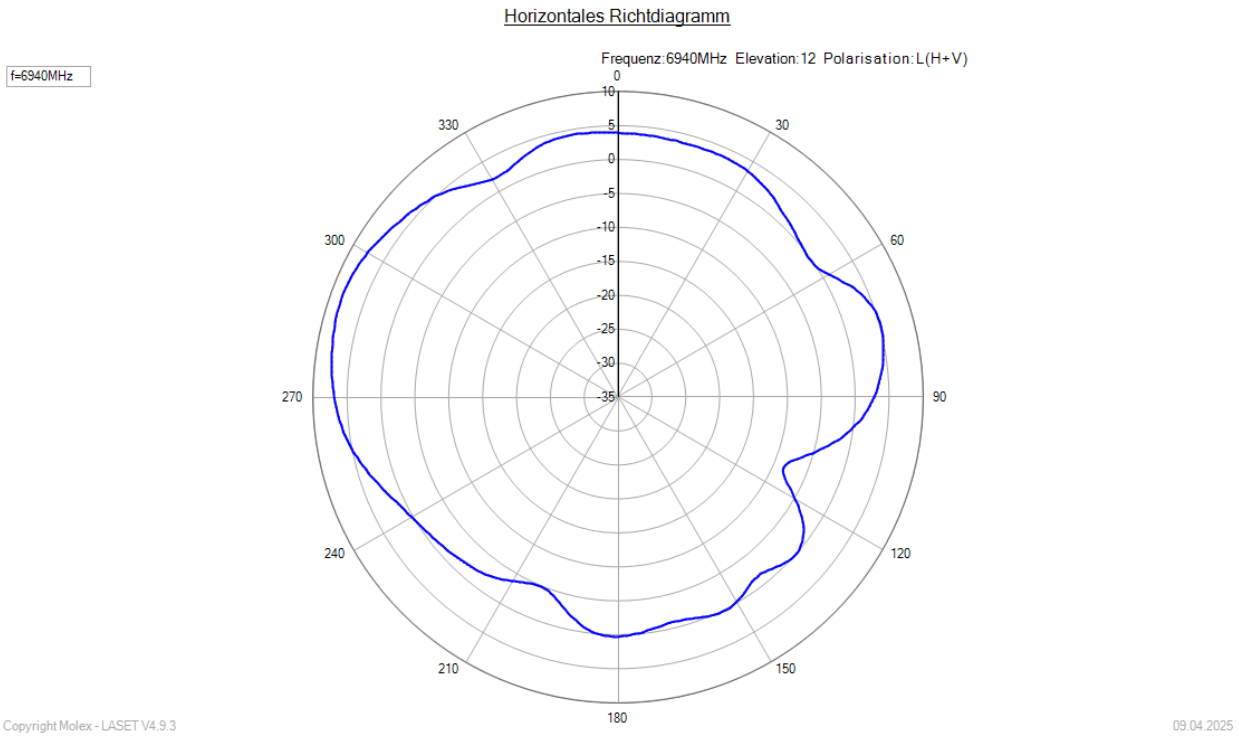

Molex Confidential Information
© Molex, LLC – All Rights Reserved.
Unauthorized Reproduction/Distribution is Prohibited.

4.3 WiFi 2 2.4 & 5/6 GHz Peak Gain

Band	frequency band in MHz		maximum gain
	begin	end	in freq. band in dBi
2,4 GHz	**2402**	**2483,5**	**5,92**
U-NII-1	**5150**	**5250**	**8,72**
U-NII-2A	**5250**	**5350**	**8,49**
U-NII-2C	**5470**	**5725**	**6,26**
U-NII-3	**5725**	**5850**	**5,54**
U-NII-5	**5925**	**6425**	**8,99**
U-NII-6	**6425**	**6525**	**8,88**
U-NII-7	**6525**	**6875**	**8,84**
U-NII-8	**6875**	**7125**	**7,00**

Molex Confidential Information
© Molex, LLC – All Rights Reserved.
Unauthorized Reproduction/Distribution is Prohibited.

4.3.1 Peak gain over Frequency 2,4 GHz

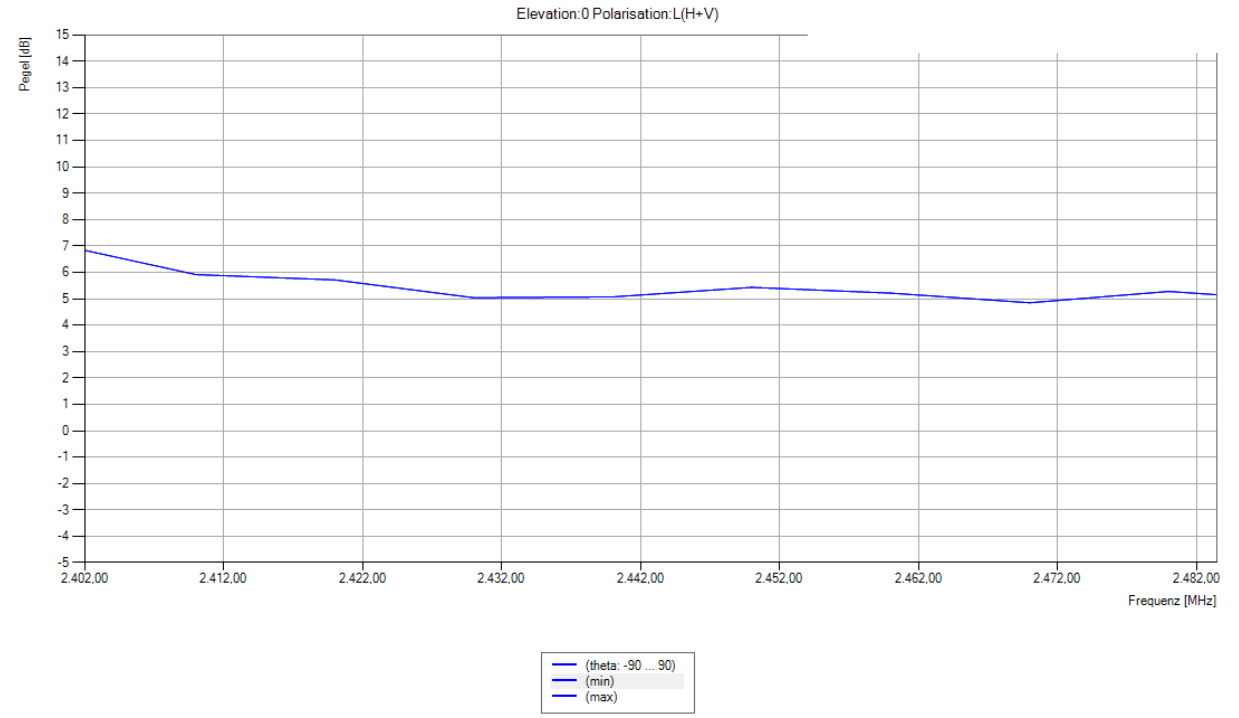

4.3.2 Peak gain over Frequency 5 GHz

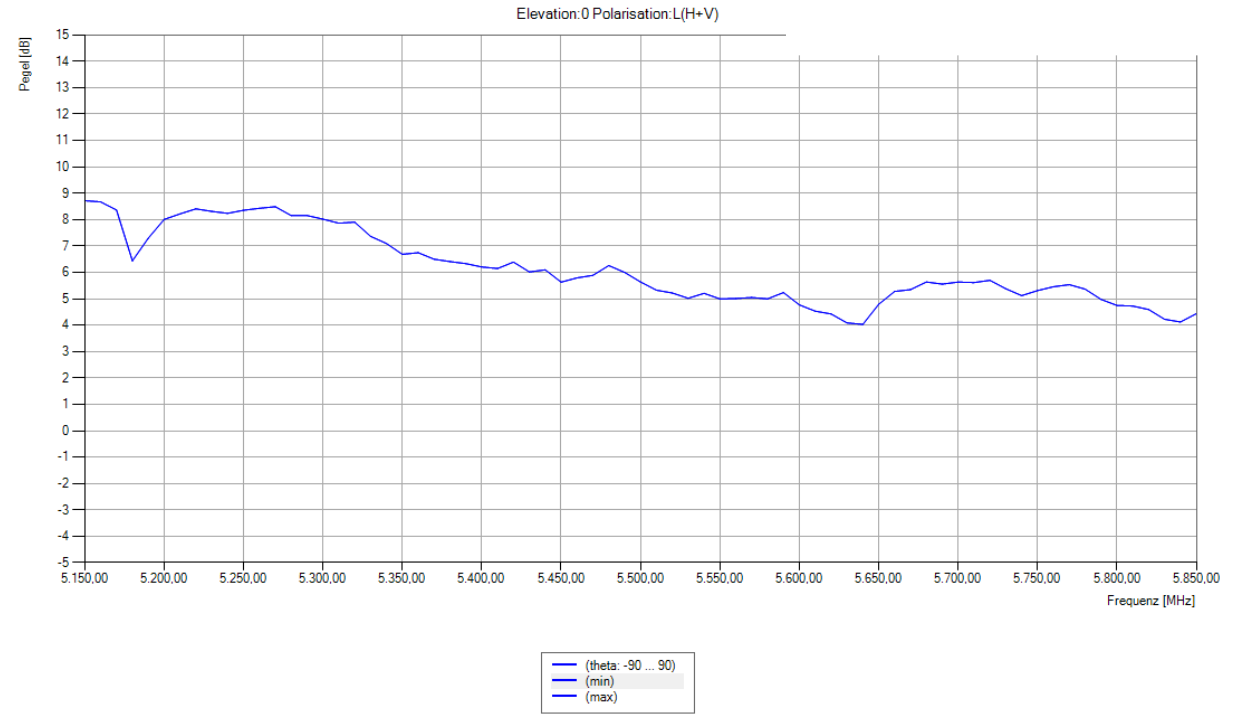

Molex Confidential Information
© Molex, LLC – All Rights Reserved.
Unauthorized Reproduction/Distribution is Prohibited.

4.3.3 Peak gain over Frequency 6 GHz

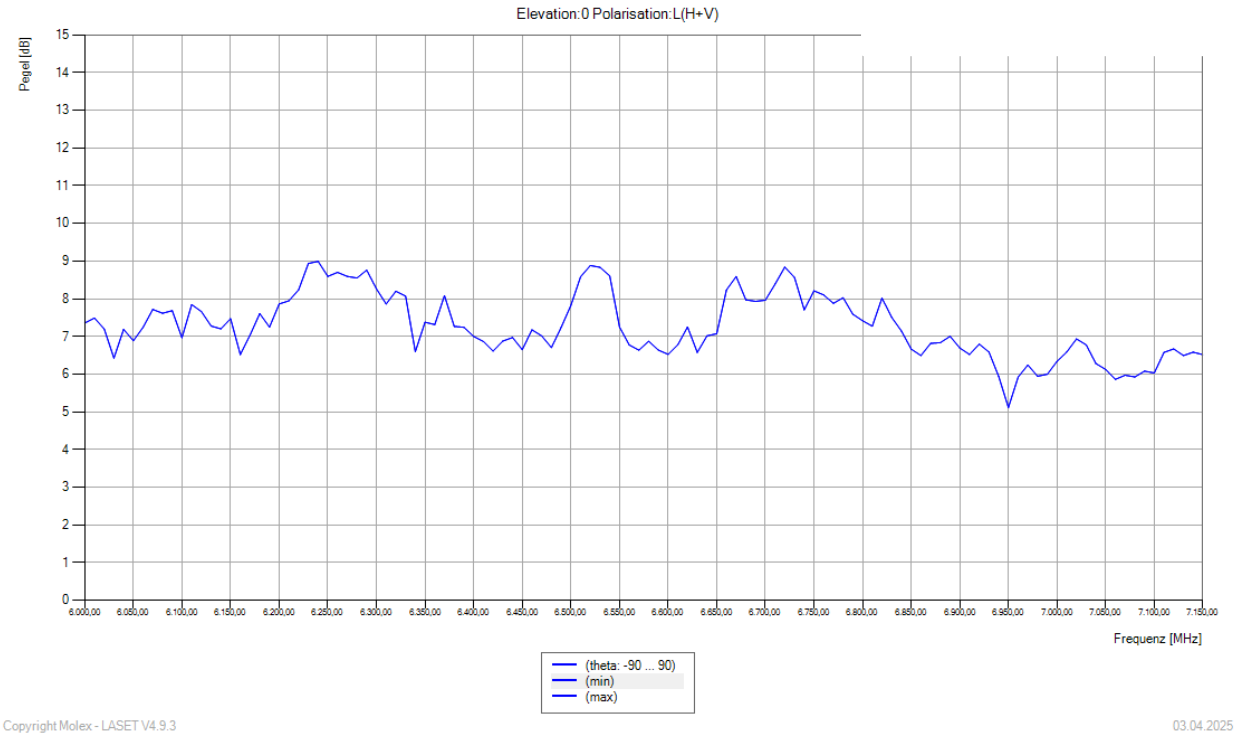

4.3.4 Radiation Pattern for Gain @ frequency range 2402 MHz -2483,5 MHz

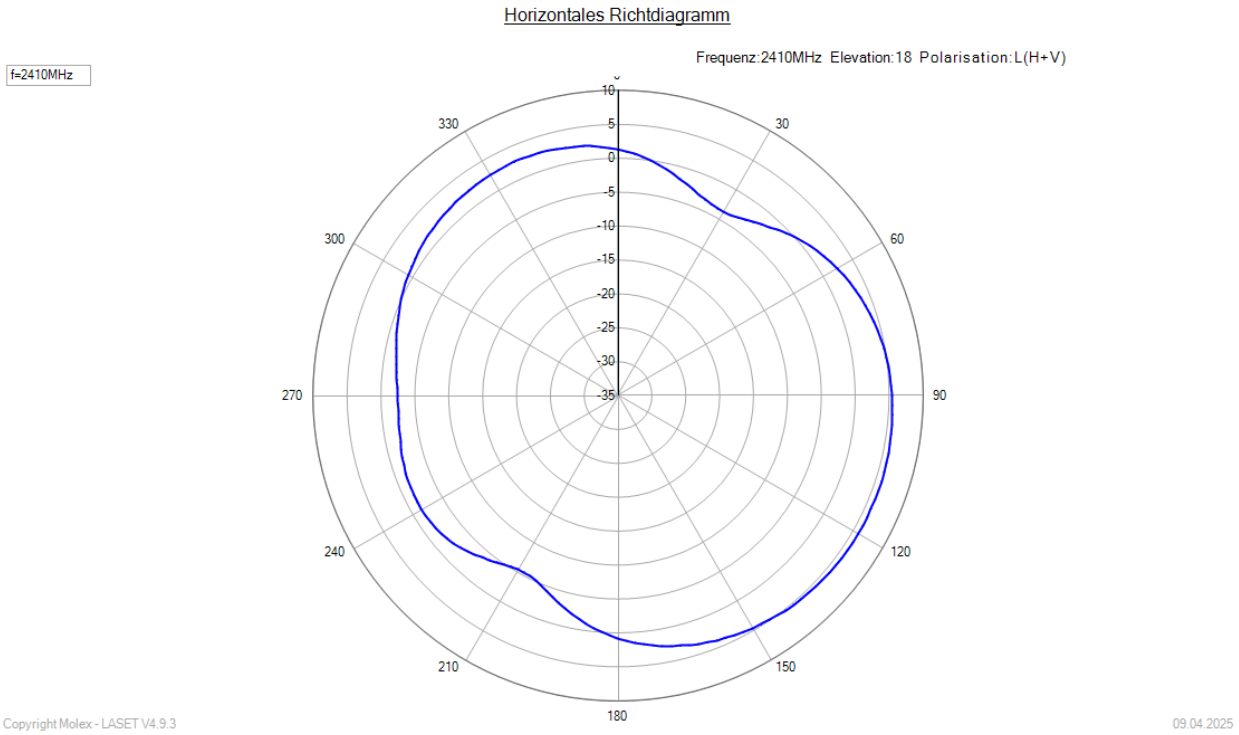

Molex Confidential Information
© Molex, LLC – All Rights Reserved.
Unauthorized Reproduction/Distribution is Prohibited.

4.3.5 Radiation Pattern for Gain @ frequency range 5150 MHz -5250 MHz

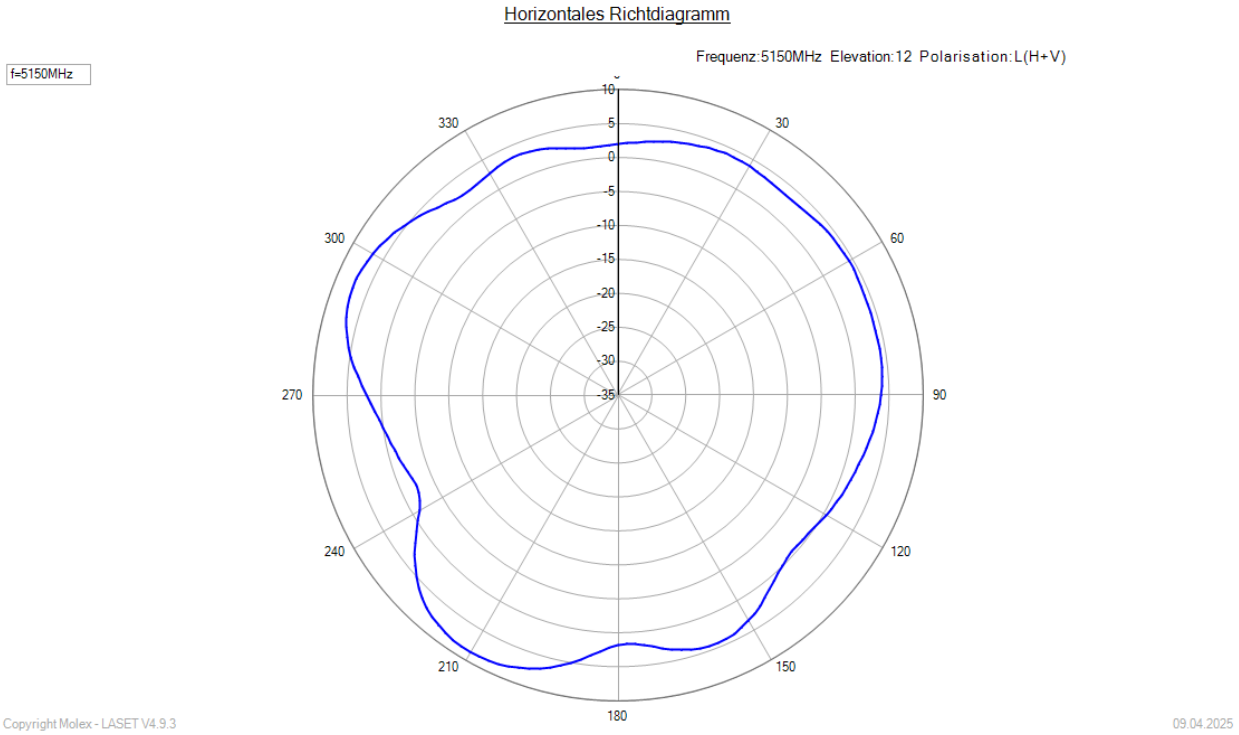

4.3.6 Radiation Pattern for Gain @ frequency range 5250 MHz -5350 MHz

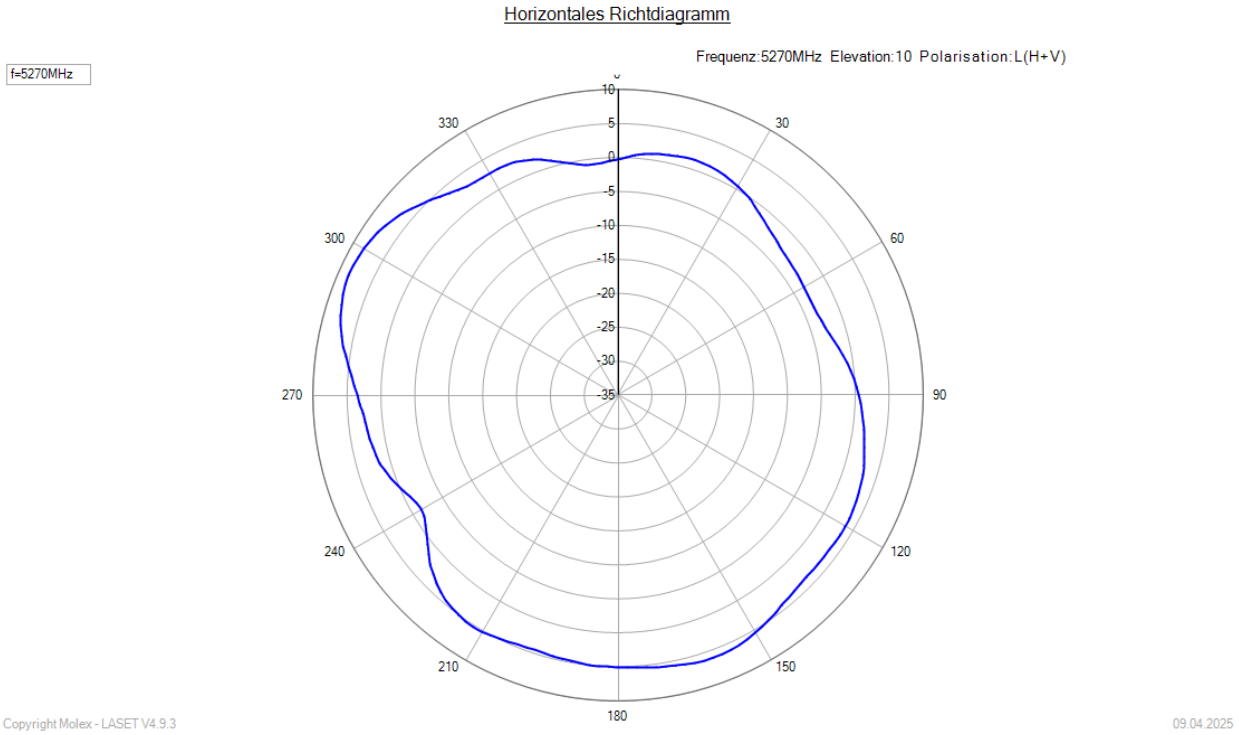

Molex Confidential Information
© Molex, LLC – All Rights Reserved.
Unauthorized Reproduction/Distribution is Prohibited.

4.3.7 Radiation Pattern for Gain @ frequency range 5470 MHz -5725 MHz

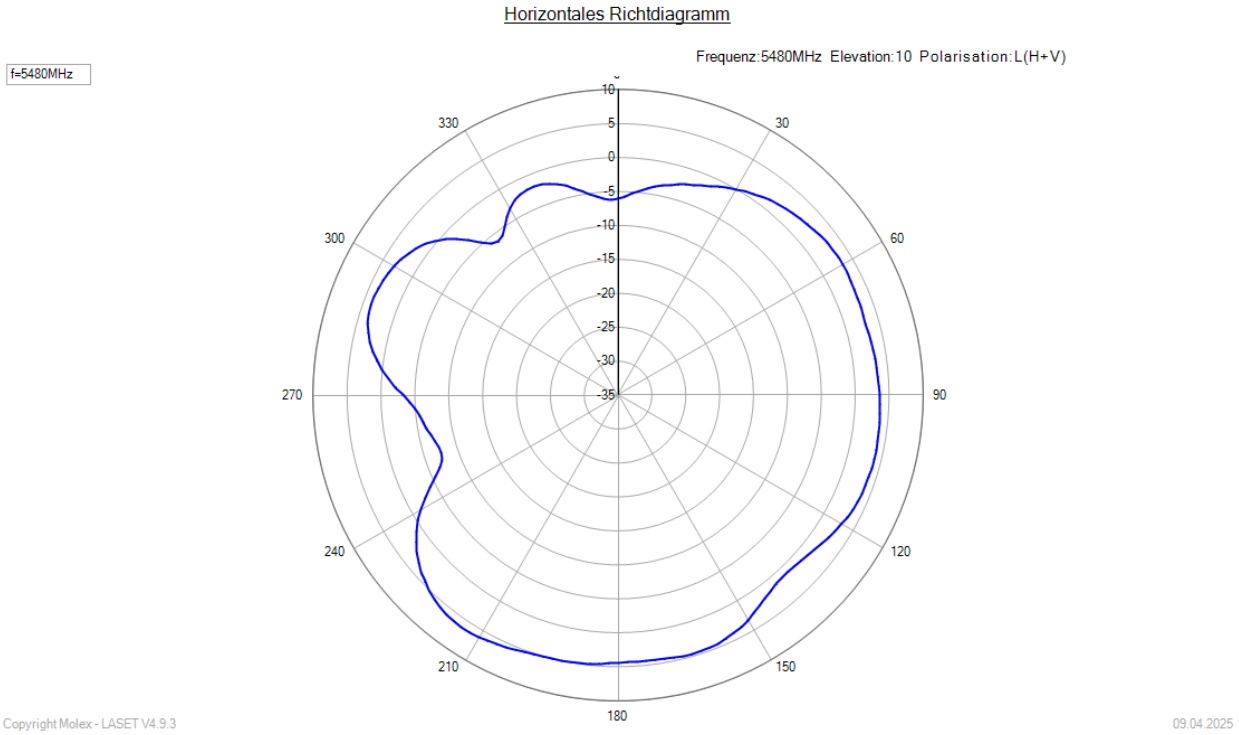

4.3.8 Radiation Pattern for Gain @ frequency range 5725 MHz -5850 MHz

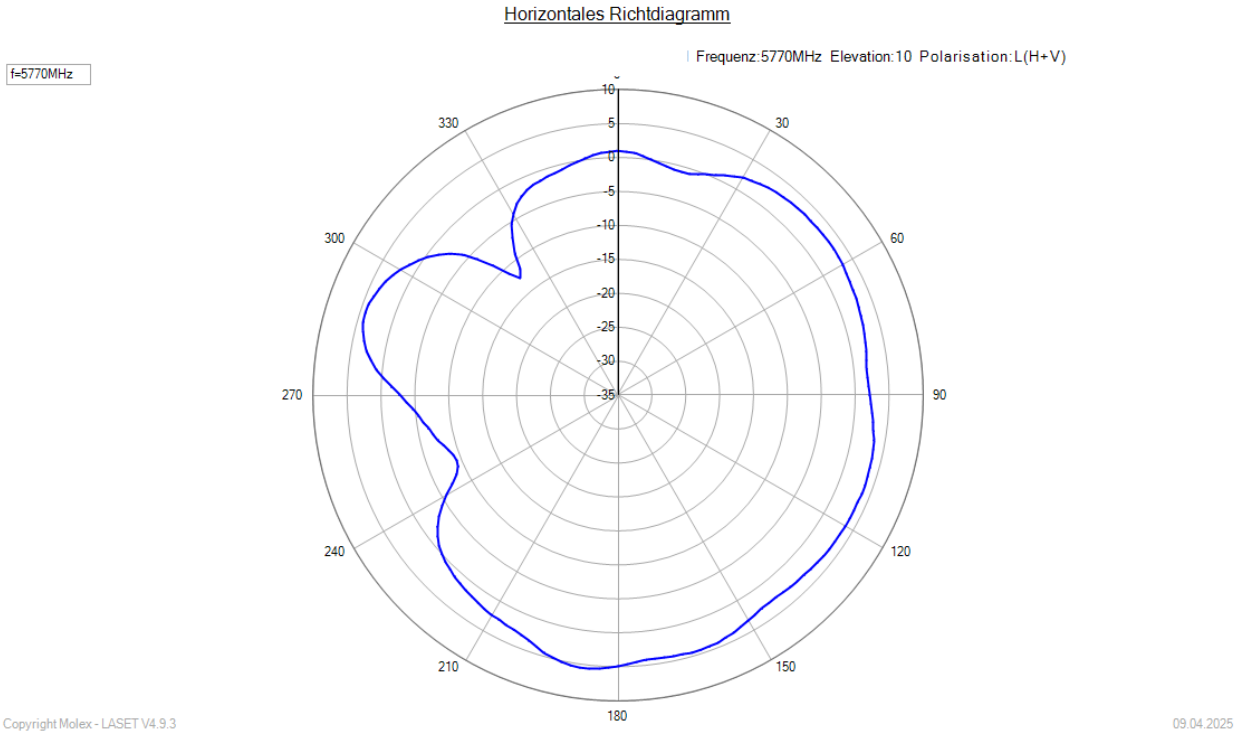

Molex Confidential Information
© Molex, LLC – All Rights Reserved.
Unauthorized Reproduction/Distribution is Prohibited.

4.3.9 Radiation Pattern for Gain @ frequency range 5925 MHz -6425 MHz

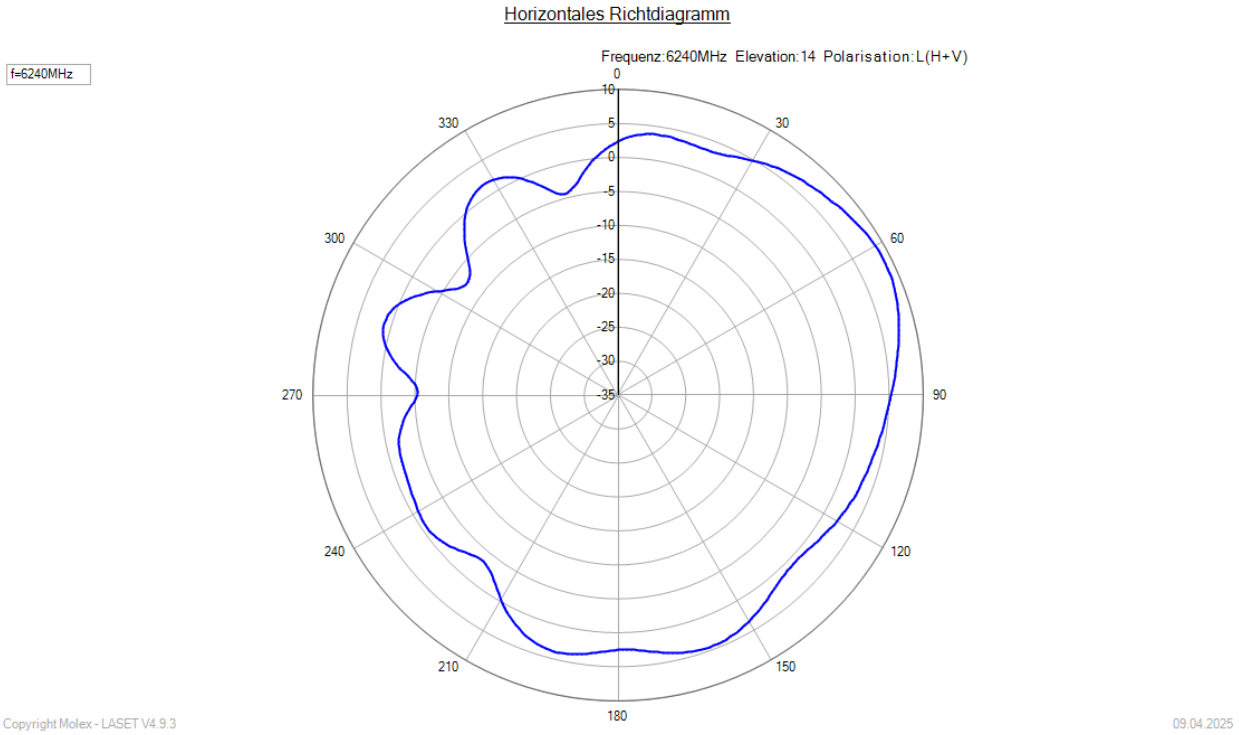

4.3.10 Radiation Pattern for Gain @ frequency range 6425 MHz -6525 MHz

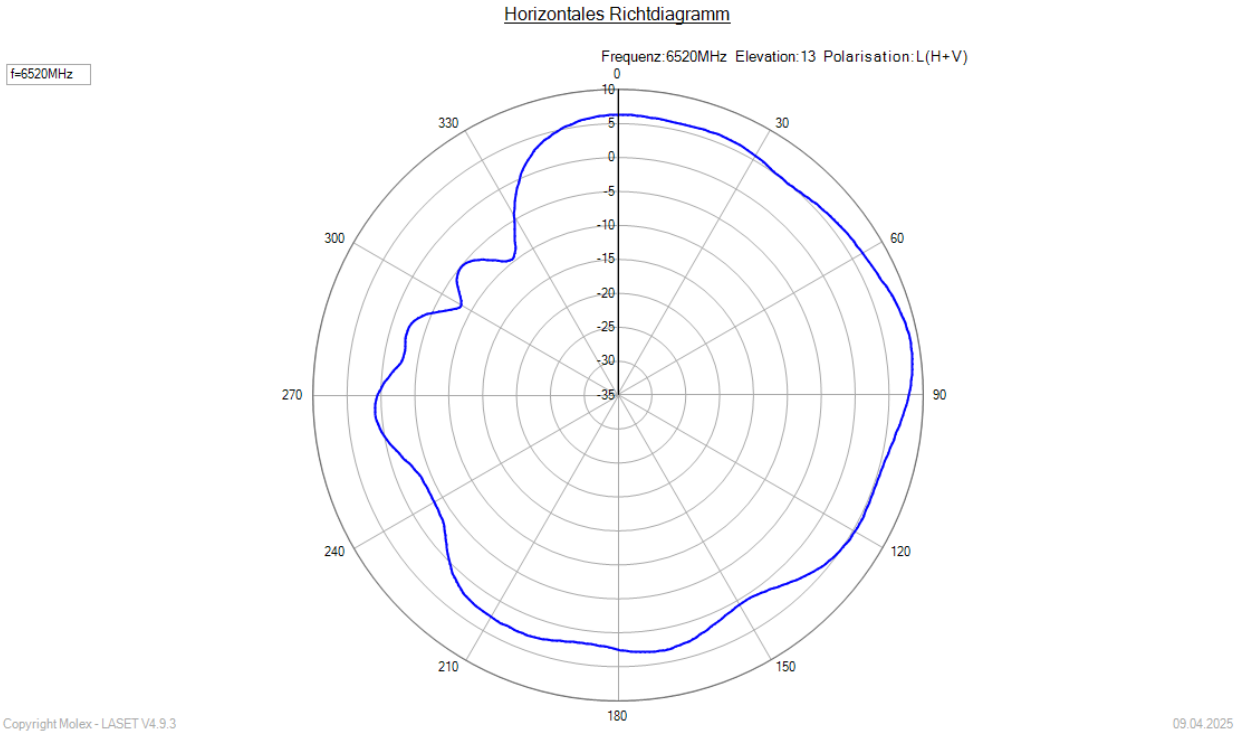

Molex Confidential Information
© Molex, LLC – All Rights Reserved.
Unauthorized Reproduction/Distribution is Prohibited.

4.3.11 Radiation Pattern for Gain @ frequency range 6525 MHz -6875 MHz

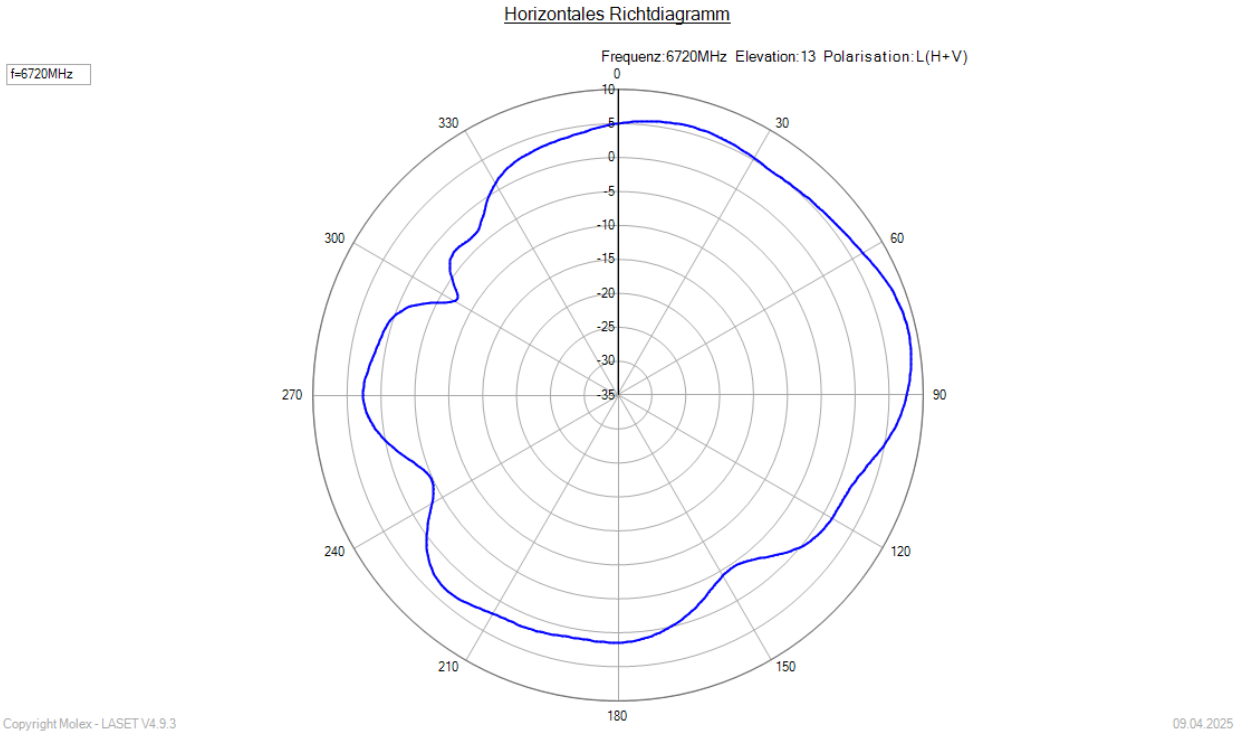

4.3.12 Radiation Pattern for Gain @ frequency range 6875 MHz -7125 MHz

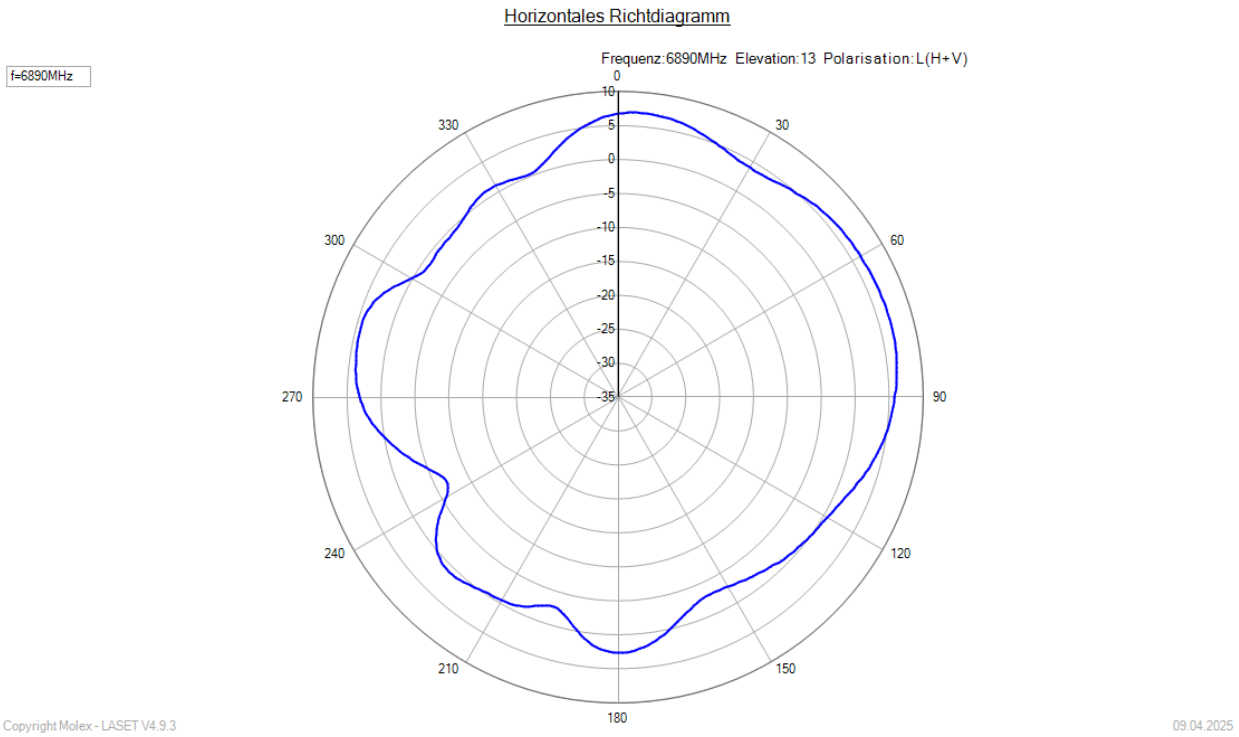

Molex Confidential Information
© Molex, LLC – All Rights Reserved.
Unauthorized Reproduction/Distribution is Prohibited.