Android player

ATMP156-15

User Manual

About This Guide

Thank you for purchasing an ACEMI product. We recommend reading this user guide carefully in order to achieve optimal pleasure and performance and to maximize the service life of this product.
This guide describes how to setup the Tablet. This guide is intended for personnel, sales people and anyone who wants to set up the Tablet in a environment.

Index

Safety and Warnings 3

Introducing the Tablet M Getting S 4

tarted 6

Playing Content 7

Main Android OS Screen (Home Screen) 8

Safety and Warnings

NOTE

This mark is applied to indicate that the equipment conforms to European safety and electro-magnetic compatibility standards.

WARNING!

Main Supply: This equipment is designed to operate from a AC 100-240 Volt, 50/60Hz AC main supply. The use of other power sources may damage this equipment. Check that the voltage marked on the rating plate located at the rear of the power adaptor states 100-240V. The manufacturer will NOT accept responsibility for damage or injury caused by connecting to the wrong voltage.

WARNING!

Main Adaptor: The supplied power adaptor is compatible with a standard main socket. NB. If the power adaptor or lead gets damaged, it must be replaced by a qualified service agent with an approved adaptor of the same type and rating.

WARNING!

Dangerous voltage constituting a risk of electric shock is present inside this equipment.

WARNINGS!

The main plug shall be the main disconnect device and shall remain operable at all times.

Do not push objects into holes and ventilation slots.

Do not expose this product to dripping or splashing or place any objects filled with liquids on or near the product.

Do not place a naked flame source, such as lighted candles, on or near this product.

Do not attempt to repair this product yourself. Always use a qualified service agent to perform adjustments or repairs.

Introducing the Tablet

This chapter introduces the Tablet and its components.

specifically designed to be used by the Advertisement market.

The Tablet is a robust, yet slim line unit that features a multi-touch screen, front camera and embedded Wi-Fi and 4G (optional). Tablet features include content autoplay, auto-copy features.

The Tablet comes in the sizes: 15.6”

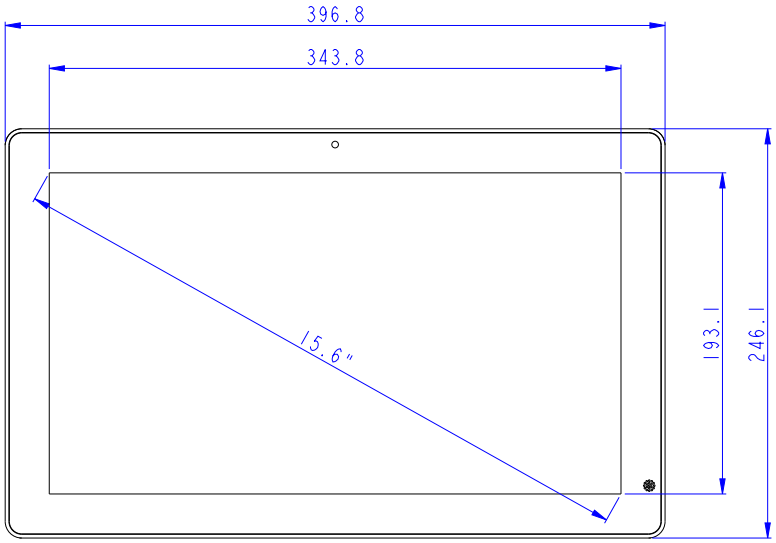
396.8
343.8
15.6"
193.1
246.1

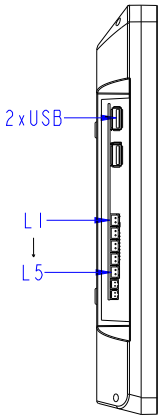
2xUSB
L1
L5

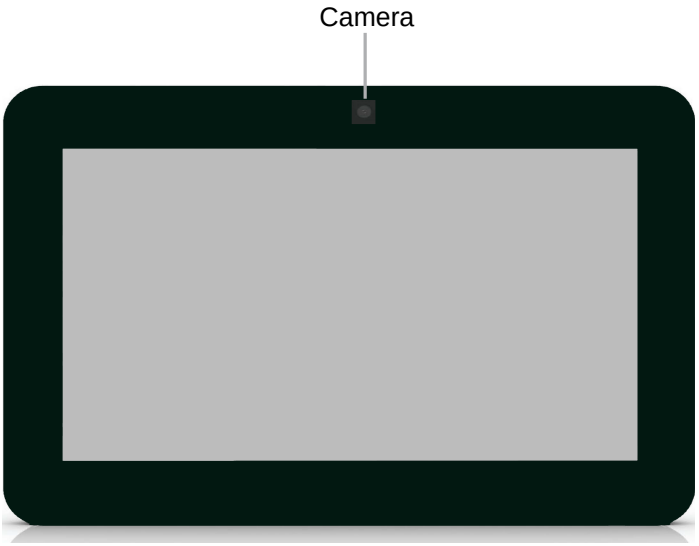
Camera

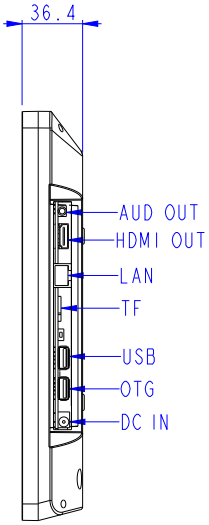
36.4
AUD OUT
HDMI OUT
LAN
TF
USB
OTG
DC IN

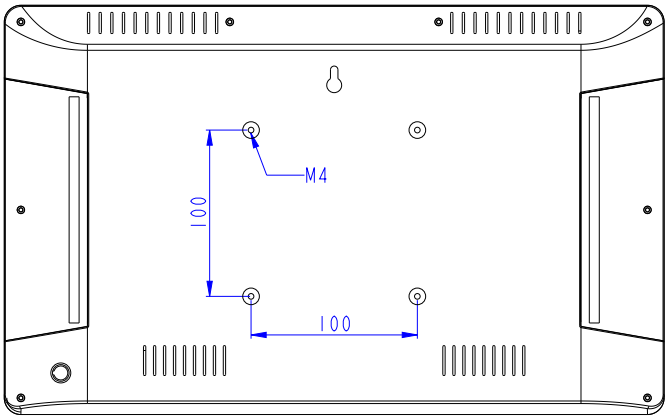
M4
100
100

Getting Started

This chapter describes how to set up and start the Tablet.

Setting Up the Tablet

To set up the Tablet:

Remove the transparent cover sheet protecting the tablet's screen.
Use the fleece side of the provided cleaning cloth to clean off any dust on the touch screen.
Peel off the backing of the anti-glare sticker and place it gently and carefully on the touch screen. You can use the white foam provided in the packaging to press on the sticker as you apply it in order to ensure there are no air bubbles between the sticker and the screen.
Mount or position the tablet on the table, counter, shelf or floor according to the provided accessories.

Turning On the Tablet

Before using the Tablet when powered by battery (without the power supply), we recommend charging it for 5 to 6 hours.
The Tablet is preconfigured to automatically start its Autoplay application when it is turned on.

To turn on the Tablet:

Move the Standby button on the back of the tablet to determine the tablet's power saving behavior.
Connect one side of the power supply to the tablet's DC In socket located on its back lower side.
Plug the power supply into a standard electrical outlet. If this is the first time the tablet is turned on, then wait two minutes after plugging in the power supply before pressing the On/Off button to turn on the tablet.

Playing Content

This chapter describes the various options for displaying videos, pictures and applications on the Tablet.

What Does the Tablet Play?

The Tablet runs standard Android applications (apk) using Android

Video Formats: The Tablet plays the following video formats:

- MPEG1 / MPEG2 / MPEG4
- Divx4 / Divx5 / Divx6
- H.264
- AVI

Image Formats: The Tablet displays the following image formats:

- JPG
- BMP
- PNG
- GIF

How Does the Tablet Play?

The following describes the various options for displaying videos, pictures and applications (Android apk) on the Tablet.

Default AutoPlay – Folder 0

The Tablet disk drive contains a Root folder that can contain sub-folders. By default, the tablet plays the content of a folder named 0. This folder is located in the Root folder.

If Folder 0 contains multiple content files, then each is played one after the other in the order in which they were added to the Tablet.

Video files are played one after another.

Image files are each displayed for three seconds.

- **Applications** continue running until there has been no user interaction for over
- three minutes (and the tablet is in Standby mode) or if you exit the application by
- quickly pressing the On/Off (Back) button. If you place an application in Folder 0, then it should be the only file in that folder.

Main Android OS Screen (Home Screen)

Home Screen

While you navigate in the Android environment, you can return to this Home screen by tapping the Home button.

The Home screen provides the following options:

Browser: Tap to open a standard web browser in which you can access the Internet and surf the web.

Applications: Tap to display the Applications Drawer which enables access to the applications and tools installed on the Tablet. You may refer to the Applications Drawer section below for more information.

Applications Drawer

The Tablet provides a standard Android Application Drawer which enables access to the applications and tools installed on the tablet. The following describes some that are especially relevant to the Tablet.

Settings: Tap to configure Tablet settings, such as Wi-Fi, Mobile and so on. More information about the relevant settings options is provided in the Setting section.

Explorer: Tap to open a standard file explorer window which you can use to transfer files to/from the Tablet. This option is especially useful for transferring files downloaded from the Internet to Folder 0.

Market: Android Market is an online software store developed by Google for Android OS devices. You can use it to download applications to the Tablet.

Settings

Tap the Settings button to configure typical Android setting options. Take note of the following options that are particularly relevant for the Tablet.

Setting Up Wireless Networks

You can tap the Settings Wireless & networks option to configure Wi-Fi and Mobile networks settings in order to download content to the Tablet.

This menu also enables you to configure Bluetooth settings for working with Bluetooth accessories, such as Bluetooth earphones.

FCC Radiation Exposure Statement:
The transmitter must not be colocated or operated in conjunction with any other antenna or transmitter. This equipment complies with the FCC RF radiation exposure limits set forth for an uncontrolled environment. This equipment should be installed and operated with a minimum distance of 20cm between the radiator and any part of your body.

Information to Users

According to the FCC Part 15.19, 15.21, and 15.105 rules, for this EUT, the instructions or operation manual furnished the user shall include the following or similar statement, placed in a prominent location in the text of the manual:

FCC Warning

This device complies with Part 15 of the FCC Rules. Operation is subject to the following two conditions:
(1) This device may not cause harmful interference, and (2) This device must accept any interference received, including interference that may cause undesired operation.

NOTE 1: This equipment has been tested and found to comply with the limits for a Class B digital device, pursuant to part 15 of the FCC Rules. These limits are designed to provide reasonable protection against harmful interference in a residential installation. This equipment generates, uses and can radiate radio frequency energy and, if not installed and used in accordance with the instructions, may cause harmful interference to radio communications. However, there is no guarantee that interference will not occur in a particular installation. If this equipment does cause harmful interference to radio or television reception, which can be determined by turning the equipment off and on, the user is encouraged to try to correct the interference by one or more of the following measures:
- Reorient or relocate the receiving antenna.
- Increase the separation between the equipment and receiver.
- Connect the equipment into an outlet on a circuit different from that to which the receiver is connected.
- Consult the dealer or an experienced radio/TV technician for help.

NOTE 2: Any changes or modifications to this unit not expressly approved by the party responsible for compliance could void the user's authority to operate the equipment.