RM101

UHF RFID 1 Port Module

Model: RM101 (E710 Module)

Size: 55.9mmx35.6mmx6mm

GENERAL DESCRIPTION

Based on the E710 chip design, Gen2 Extension Ready, maximizing chip potential with outstanding multi-tag anti-collision capability and advanced thermal balance design ensuring consistently high performance over time make these modules the best choice for high-performance handheld RFID devices. They are also suitable for various mainstream RFID applications, including logistics and apparel.

FEATURES

- Self-intellectual property;
- Designed with IMPINJ E710 and support ISO18000-6C (EPC C1G2) protocol tag, featuring excellent multi-tag anti-collision functionality;
- 865~868MHz/902~928MHz frequency band (frequency customization optional) with FCC and CE certificate compliant;
- FHSS
- MMCX socket for external antenna;
- Effective distance up to 12m*;
- Maximum inventory speed* up to 1000pcs/s;
- Tag buffer size up to 1000PCS@96bits EPC;
- Low power dissipation with +3.8~5.5VDC power supply;
- Support RSSI;
- Support RS232 serial communication interface (3.3V TTL level);
- High stability with air cooling and no extra heat sinking;
- Support on-the-site firmware upgrading.

**Effective reading distance and tag interrogation speed are directly related to the antenna, tags, and the working environment.*

CHARACTERISTICS

- **Absolute Maximum Ratings**

ITEM	SYMBOL	VALUE	UNIT
Power Supply	VCC	6	V
Operating Temp	T_{OPR}	-20 ~ +65	°C
Storage Temp	T_{STR}	-40 ~ +85	°C

- **Electrical and Mechanical Specification**

  Under T_A=25°C, VCC = +5.0V unless specified

ITEM	SYMBOL	MIN	TYP	MAX	UNIT
Power Supply	VCC	3.6	5	5.5	V
Current Dissipation	I_C	410	100 (standby)	1350	mA
Frequency	F_{REQ}	-	865~868 (ETSI) 902~928 (FCC)	-	MHz
Receive Sensitivity	SR		-87(using E710)		dBm

INTERFACE

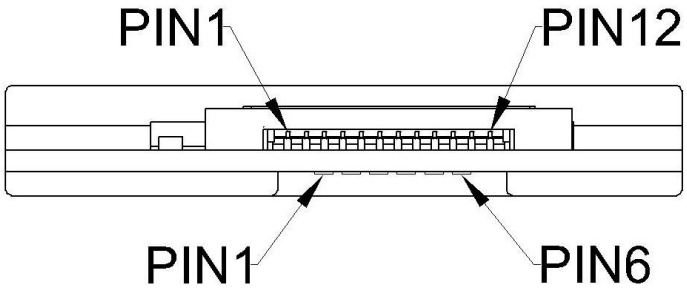

No.	Pad No.	Symbol	Comment
1	1	VCC	Power Supply
2	1	VCC	Power Supply
3	2	GND	Ground
4	2	GND	Ground
5	3	EN	Enable. High level effective with internal 10kOhm resistor pulled up to VCC
6		NC	Reserved
7		NC	Reserved
8	4	NC	Reserved
9	5	RXD	Serial data input
10	6	TXD	Serial data output
11		NC	Reserved
12		NC	Reserved

MECHANICAL DATA (UNIT: mm)

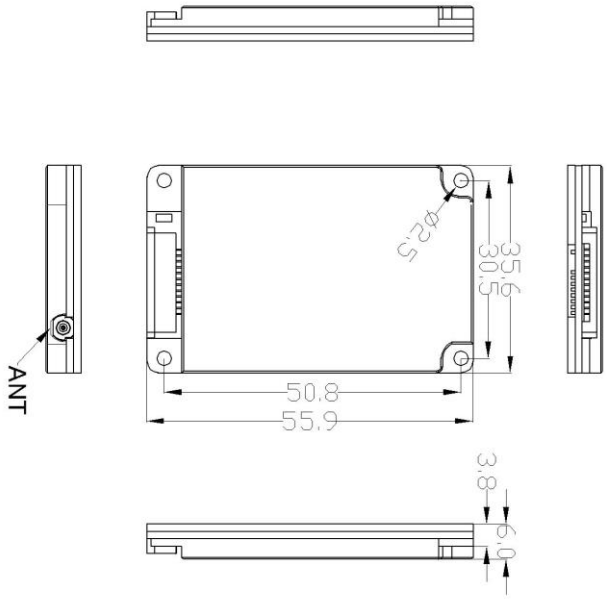

Application Information

1. When designing fixed reader, please take care of heat sinking and remember to make sure the heat sinker of the module is closely and stably attached to the reader's bottom plate;
2. Please refer to User's Manual for detailed protocol description.

Remark:

1. *Specifications are subject to change, please pay attention to our latest version.*
2. *Unitech Electronics Co., Ltd. reserves the right to the final interpretation of the above terms.*

© 2024 Unitech Electronics Co., Ltd. All rights reserved.
Unitech is a registered trademark of Unitech Electronics Co., Ltd.
All product and company names are trademarks, service marks, or registered trademarks of their respective owners.

Antenna information	
Gain	3.65dBi
Output Impedance	50Ohm
Connectors type	MMCX
Isolation requirements	Antenna isolation greater than 20dB
Layout	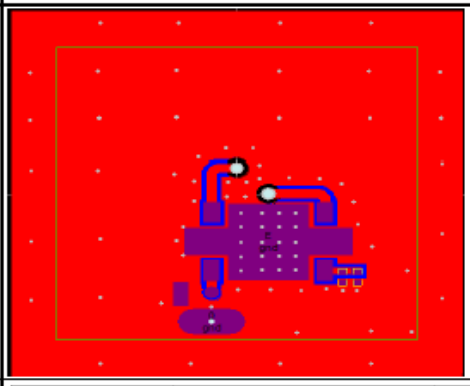
BOM	

Description	Name	Designator	Footprint	Quantity
CA504005D-US	Ceramic tiles	U1	40*40*5	1
HC0900A-03	bridge	U2	SMD	1
100Ω	resistor	R1、R2	0402M	2

FCC WARNING

FCC Caution: Any changes or modifications not expressly approved by the party responsible for compliance could void the user's authority to operate this equipment.

This device complies with Part 15 of the FCC Rules. Operation is subject to the following two conditions:

(1) This device may not cause harmful interference, and (2) this device must accept any interference received, including interference that may cause undesired operation.

This device and its antenna(s) must not be co-located or operating in conjunction with any other antenna or transmitter.

15.105 Information to the user.

(b) For a Class B digital device or peripheral, the instructions furnished the user shall include the following or similar statement, placed in a prominent location in the text of the manual:

Note: This equipment has been tested and found to comply with the limits for a Class B digital device, pursuant to part 15 of the FCC Rules.

These limits are designed to provide reasonable protection against harmful interference in a

residential installation. This equipment generates, uses and can radiate radio frequency energy and, if not installed and used in accordance with the instructions, may cause harmful interference to radio communications. However, there is no guarantee that interference will not occur in a particular installation. If this equipment does cause harmful interference to radio or television reception, which can be determined by turning the equipment off and on, the user is encouraged to try to correct the interference by one or more of the following measures:
—Reorient or relocate the receiving antenna.
—Increase the separation between the equipment and receiver.
—Connect the equipment into an outlet on a circuit different from that to which the receiver is connected.
—Consult the dealer or an experienced radio/TV technician for help.

This equipment complies with FCC radiation exposure limits set forth for an uncontrolled environment. This equipment should be installed and operated with minimum distance 20 cm between the radiator and your body.

Radiation Exposure Statement:
This equipment complies with FCC radiation exposure limits set forth for an uncontrolled environment.
This transmitter must not be co-located or operating in conjunction with any other antenna or transmitter.
The availability of some specific channels and/or operational frequency bands are country dependent and are firmware programmed at the factory to match the intended destination.
The firmware setting is not accessible by the end user.
The final end product must be labelled in a visible area with the following:
“Contains Transmitter Module HLERM101U”

Requirement per KDB996369 D03

2.2 List of applicable FCC rules

List the FCC rules that are applicable to the modular transmitter. These are the rules that specifically establish the bands of operation, the power, spurious emissions, and operating fundamental frequencies. DO NOT list compliance to unintentional-radiator rules (Part 15 Subpart B) since that is not a condition of a module grant that is extended to a host manufacturer. See also Section 2.10 below concerning the need to notify host manufacturers that further testing is required.3

Explanation: This module meets the requirements of FCC part 15C(15.247).

2.3 Summarize the specific operational use conditions

Describe use conditions that are applicable to the modular transmitter, including for example any limits on antennas, etc. For example, if point-to-point antennas are used that require reduction in

power or compensation for cable loss, then this information must be in the instructions. If the use condition limitations extend to professional users, then instructions must state that this information also extends to the host manufacturer's instruction manual. In addition, certain information may also be needed, such as peak gain per frequency band and minimum gain, specifically for master devices in 5 GHz DFS bands.

Explanation: The EUT has External antenna, The antenna gain is 3.65dBi.

2.4 Limited module procedures

If a modular transmitter is approved as a "limited module," then the module manufacturer isresponsible for approving the host environment that the limited module is used with. The manufacturer of a limited module must describe, both in the filing and in the installation instructions, the alternative means that the limited module manufacturer uses to verify that the host meets the necessary requirements to satisfy the module limiting conditions.

A limited module manufacturer has the flexibility to define its alternative method to address the conditions that limit the initial approval, such as: shielding, minimum signaling amplitude, buffered modulation/data inputs, or power supply regulation. The alternative method could include that the limited module manufacturer reviews detailed test data or host designs prior to giving the host manufacturer approval.

This limited module procedure is also applicable for RF exposure evaluation when it is necessary to demonstrate compliance in a specific host. The module manufacturer must state how control of the product into which the modular transmitter will be installed will be maintained such that full compliance of the product is always ensured. For additional hosts other than the specific host originally granted with a limited module, a Class II permissive change is required on the module grant to register the additional host as a specific host also approved with the module.

Explanation: The module is a single module.

2.5 Trace antenna designs

For a modular transmitter with trace antenna designs, see the guidance in Question 11 of KDB Publication 996369 D02 FAQ – Modules for Micro-Strip Antennas and traces. The integration information shall include for the TCB review the integration instructions for the following aspects: layout of trace design, parts list (BOM), antenna, connectors, and isolation requirements.

a) Information that includes permitted variances (e.g., trace boundary limits, thickness, length, width, shape(s), dielectric constant, and impedance as applicable for each type of antenna);

b) Each design shall be considered a different type (e.g., antenna length in multiple(s) of frequency, the wavelength, and antenna shape (traces in phase) can affect antenna gain and must be considered);

c) The parameters shall be provided in a manner permitting host manufacturers to design the printed circuit (PC) board layout;

d) Appropriate parts by manufacturer and specifications;

e) Test procedures for design verification; and

f) Production test procedures for ensuring compliance.

The module grantee shall provide a notice that any deviation(s) from the defined parameters of the antenna trace, as described by the instructions, require that the host product manufacturer must notify the module grantee that they wish to change the antenna trace design. In this case, a Class II permissive change application is required to be filed by the grantee, or the host manufacturer can take responsibility through the change in FCC ID (new application) procedure followed by a Class II permissive change application.

Explanation: Yes, The module with External antenna designs, and This manual has been shown the layout of antenna, connectors, and isolation requirements.

2.6 RF exposure considerations

It is essential for module grantees to clearly and explicitly state the RF exposure conditions that permit a host product manufacturer to use the module. Two types of instructions are required for RF exposure information: (1) to the host product manufacturer, to define the application conditions (mobile, portable – xx cm from a person's body); and (2) additional text needed for the host product manufacturer to provide to end users in their end-product manuals. If RF exposure statements and use conditions are not provided, then the host product manufacturer is required to take responsibility of the module through a change in FCC ID (new application).

Explanation: This module complies with FCC RF radiation exposure limits set forth for an uncontrolled environment, This equipment should be installed and operated with a minimum distance of 20 centimeters between the radiator and your body." This module is designed to comply with the FCC statement, FCC ID is: HLERM101U.

2.7 Antennas

A list of antennas included in the application for certification must be provided in the instructions. For modular transmitters approved as limited modules, all applicable professional installer instructions must be included as part of the information to the host product manufacturer. The antenna list shall also identify the antenna types (monopole, PIFA, dipole, etc. (note that for example an "omni-directional antenna" is not considered to be a specific "antenna type")).

For situations where the host product manufacturer is responsible for an external connector, for example with an RF pin and antenna trace design, the integration instructions shall inform the installer that unique antenna connector must be used on the Part 15 authorized transmitters used in the host product. The module manufacturers shall provide a list of acceptable unique connectors.

Explanation: The EUT use unique antenna connectors. The EUT has External antenna, antenna gain is 3.65dBi.

2.8 Label and compliance information

Grantees are responsible for the continued compliance of their modules to the FCC rules. This includes advising host product manufacturers that they need to provide a physical or e-label stating "Contains FCC ID" with their finished product. See Guidelines for Labeling and User Information for RF Devices – KDB Publication 784748.

Explanation: The host system using this module, should have label in a visible area indicated the

following texts: "Contains FCC ID: HLERM101U”

2.9 Information on test modes and additional testing requirements5

Additional guidance for testing host products is given in KDB Publication 996369 D04 Module Integration Guide. Test modes should take into consideration different operational conditions for a stand-alone modular transmitter in a host, as well as for multiple simultaneously transmitting modules or other transmitters in a host product.

The grantee should provide information on how to configure test modes for host product evaluation for different operational conditions for a stand-alone modular transmitter in a host, versus with multiple, simultaneously transmitting modules or other transmitters in a host.

Grantees can increase the utility of their modular transmitters by providing special means, modes, or instructions that simulates or characterizes a connection by enabling a transmitter. This can greatly simplify a host manufacturer’s determination that a module as installed in a host complies with FCC requirements.

Explanation: Can increase the utility of our modular transmitters by providing instructions that simulates or characterizes a connection by enabling a transmitter.

2.10 Additional testing, Part 15 Subpart B disclaimer

The grantee should include a statement that the modular transmitter is only FCC authorized for the specific rule parts (i.e., FCC transmitter rules) listed on the grant, and that the host product manufacturer is responsible for compliance to any other FCC rules that apply to the host not covered by the modular transmitter grant of certification. If the grantee markets their product as being Part 15

Subpart B compliant (when it also contains unintentional-radiator digital circuity), then the grantee shall provide a notice stating that the final host product still requires Part 15 Subpart B compliance testing with the modular transmitter installed.

Explanation: The module without unintentional-radiator digital circuity, so the module does not require an evaluation by FCC Part 15 Subpart B. The host shoule be evaluated by the FCC Subpart B.