UHF RFID Mobile Reader

- RP300 –

User Manual

Version 1.1

Revision History

Date	Change Description	Version
20250825	Initial Version	1.0
20250827	Update Specification and Warning Information	1.1

Preface

About This Manual

Thank you for purchasing the Unitech product.
This manual explains how to install, operate and maintain our product.
No part of this publication may be reproduced or used in any form, or by any electrical or mechanical means, such as photocopying, recording, or information storage and retrieval systems, without permission in writing from the manufacturer. The material in this manual is subject to change without notice.

Regulatory Compliance Statements

FCC Warning Statement

This device has been tested and found to comply with the limits for a Class B digital device, pursuant to part 15 of the FCC rules. These limits are designed to provide reasonable protection against harmful interference in a residential installation. This equipment generates, uses and can radiate radio frequency energy and, if not installed and used in accordance with the instructions, may cause harmful interference with radio communications. However, there is no guarantee that interference will not occur in a particular installation. If this equipment does cause harmful interference with radio or television reception, which can be determined by turning the equipment off and on, the user is encouraged to try to correct the interference by one or more of the following measures:

–Reorient or relocate the receiving antenna.
–Increase the separation between the equipment and receiver.
–Connect the equipment into an outlet on a circuit different from that to which the receiver is connected.
–Consult the dealer or an experienced radio/TV technician for help.

1. This transmitter must not be co-located or operating in conjunction with any other antenna or transmitter.

© 2025 unitech Electronics Co., Ltd. All rights reserved.
unitech is a registered trademark of unitech Electronics Co., Ltd.
All product and company names are trademarks, service marks, or registered trademarks of their respective owners

2. This device complies with FCC RF radiation exposure limits set forth for an uncontrolled environment. To maintain compliance with FCC RF exposure requirements, avoid direct contact to the transmitting antenna during transmitting.
3. Any changes or modifications (including the antennas) made to this device that are not expressly approved by the manufacturer may void the user's authority to operate the equipment.

FCC Label Statement

This device complies with part 15 of the FCC rules. Operation is subject to the following two conditions:

1. This device may not cause harmful interference.
2. This device must accept any interference received, including interference that may cause undesired operation.

RF Radiation Exposure Statement

For body contact during operation, this device has been tested and meets FCC RF exposure guidelines when used with an accessory that contains no metal and that positions the handset a minimum of 1.0 cm from the body.
Use of other accessories may not ensure compliance with FCC RF exposure guidelines.

Canadian Compliance Statement

This device complies with Canada licence-exempt RSS standard(s).
Operation is subject to the following two conditions: (1) this device may not cause interference, and (2) this device must accept any interference, including interference that may cause undesired operation of the device.

(i) the device for operation in the band 5150–5250 MHz is only for indoor use to reduce the potential for harmful interference to co-channel mobile satellite systems;
(ii) for devices with detachable antenna(s), the maximum antenna gain permitted for devices in the bands 5250-5350 MHz and 5470-5725 MHz shall be such that the equipment still complies with the e.i.r.p. limit;
(iii) for devices with detachable antenna(s), the maximum antenna gain permitted for devices in the band 5725-5850 MHz shall be such that the equipment still complies with the e.i.r.p. limits as appropriate; and
(iv) where applicable, antenna type(s), antenna models(s), and worst-case tilt angle(s) necessary to remain compliant with the e.i.r.p. elevation mask requirement set forth in section 6.2.2.3 shall be clearly indicated.

© 2025 unitech Electronics Co., Ltd. All rights reserved.
unitech is a registered trademark of unitech Electronics Co., Ltd.
All product and company names are trademarks, service marks, or registered trademarks of their respective owners

Canada, avis d'Industry Canada (IC)

Cet appareil est conforme avec Industrie Canada exemptes de licence RSS standard(s). Son fonctionnement est soumis aux deux conditions suivantes: (1) cet appareil ne doit pas causer d'interférence et (2) cet appareil doit accepter toute interférence, notamment les interférences qui peuvent affecter son fonctionnement.

(i) les dispositifs fonctionnant dans la bande de 5 150 à 5 250 MHz sont réservés uniquement pour une utilisation à l'intérieur afin de réduire les risques de brouillage préjudiciable aux systèmes de satellites mobiles utilisant les mêmes canaux;

(ii) ii.pour les dispositifs munis d'antennes amovibles, le gain maximal d'antenne permis pour les dispositifs utilisant les bandes de 5 250 à 5 350 MHz et de 5 470 à 5 725 MHz doit être conforme à la limite de la p.i.r.e;

(iii) iii.pour les dispositifs munis d'antennes amovibles, le gain maximal d'antenne permis (pour les dispositifs utilisant la bande de 5 725 à 5 850 MHz) doit être conforme à la limite de la p.i.r.e. spécifiée, selon le cas;

(iv) lorsqu'il y a lieu, les types d'antennes (s'il y en a plusieurs), les numéros de modèle de l'antenne et les pires angles d'inclinaison nécessaires pour rester conforme à l'exigence de la p.i.r.e. applicable au masque d'élévation, énoncée à la section 6.2.2.3, doivent être clairement indiqués.

RF Radio Frequency Exposure Information

The radiated output power of the Wireless Device is below the Industry Canada (IC) radio frequency exposure limits. The Wireless Device should be used in such a manner such that the potential for human contact during normal operation is minimized.
This device has been evaluated for and shown compliant with the IC Specific Absorption Rate ("SAR") limits when operated in portable exposure conditions.

Informations concernant l'exposition aux fréquences radio (RF)

La puissance de sortie émise par l'appareil de sans fil est inférieure à la limite d'exposition aux fréquences radio d'Industry Canada (IC). Utilisez l'appareil de sans fil de façon à minimiser les contacts humains lors du fonctionnement normal.
Ce dispositif a été évalué pour et démontré conforme à la Taux IC d'absorption spécifique ("SAR") des limites lorsqu'il est utilisé dans des conditions d'exposition portatifs.

© 2025 unitech Electronics Co., Ltd. All rights reserved.
unitech is a registered trademark of unitech Electronics Co., Ltd.
All product and company names are trademarks, service marks, or registered trademarks of their respective owners

European Conformity Statement

Unitech Electronics co., Ltd herewith declares that the Unitech product is in compliance with the essential requirements and all other provisions of the RED 2014/53/EU directive.
The declaration of conformity is available for download at:
https://portal.Unitech.eu/public/Safetyregulatorystatement

UK Declaration of Conformity (DoC)

Hereby, Unitech Electronics co., Ltd. declares that the radio equipment type Rugged Handheld Computer is in compliance with UK Radio Equipment Regulations 2017(RER 2017 (SI 2017/1206)).
The full text of the UK declaration of conformity is available at the following internet address:
https://www.ute.com

UKCA Mark Warning

CE RF Exposure Compliance

For body-worn operation, this device has been tested and meets the ICNIRP guidelines and the European Standard EN 62209-2, for use with dedicated accessories, SAR is measured with this device at a separation of 0.5 cm to the body, while transmitting at the highest certified output power level in all frequency bands of this device. Use of other accessories which contain metals may not ensure compliance with ICNIRP exposure guidelines.

CE Mark Warning

© 2025 unitech Electronics Co., Ltd. All rights reserved.
unitech is a registered trademark of unitech Electronics Co., Ltd.
All product and company names are trademarks, service marks, or registered trademarks of their respective owners

RoHS Statement

This device conforms to RoHS (Restriction Of Hazardous Substances) European Union regulations that set maximum concentration limits on hazardous materials used in electrical and electronic equipment.

Waste electrical and electronic equipment (WEEE)

Unitech has set up a policy and process to meet the 2012/19/EU concerning electronic waste disposal.

For more detailed information of the electronic waste disposal of the products you have purchased from Unitech directly or via Unitech's resellers, you shall either contact your local supplier or visit us at: https://portal.Unitech.eu/public/WEEE

© 2025 unitech Electronics Co., Ltd. All rights reserved.
unitech is a registered trademark of unitech Electronics Co., Ltd.
All product and company names are trademarks, service marks, or registered trademarks of their respective owners

Taiwan NCC Warning Statement

低功率射頻器材技術規範

取得審驗證明之低功率射頻器材，非經核准，公司、商號或使用者均不得擅自變更頻率、加大功率或變更原設計之特性及功能。低功率射頻器材之使用不得影響飛航安全及干擾合法通信；經發現有干擾現象時，應立即停用，並改善至無干擾時方得繼續使用。前述合法通信，指依電信管理法規定作業之無線電通信。低功率射頻器材須忍受合法通信或工業、科學及醫療用電波輻射性電機設備之干擾。應避免影響附近雷達系統之操作。高增益指向性天線只得應用於固定式點對點系統。

SAR標準值2.0W/KG, 送測產品實測值為:　　(W/KG)

注意事項:

1. 使用過度恐傷害視力。
2. 使用30分鐘請休息10分鐘；未滿2歲以下幼兒不看螢幕，2歲以上每天看螢幕不要超過1小時。減少電磁波影響，請妥適使用

Note:

Within the 5.25-5.35 GHz band, U-NII devices will be restricted to indoor operations to reduce any potential for harmful interference to co-channel MSS operations.

© 2025 unitech Electronics Co., Ltd. All rights reserved.
unitech is a registered trademark of unitech Electronics Co., Ltd.
All product and company names are trademarks, service marks, or registered trademarks of their respective owners

Laser Information

The Unitech product is certified in the U.S. to conform to the requirements of DHHS/CDRH 21CFR Subchapter J and to the requirements of IEC 60825-1. Class II and Class 2 products are not considered to be hazardous. The Unitech product contains internally a Visible Laser Diode (VLD) whose emissions do not exceed the maximum limits as set forth in the above regulations. The scanner is designed so that there is no human access to harmful laser light during normal operation, user maintenance or prescribed service operations.

The laser safety warning label required by the DHHS/IEC for the Unitech product's optional laser scanner module is located on the memory compartment cover, on the back of the unit.

* Laser information only applies to the products with laser components.

CAUTION! Use of controls or adjustments or performance of procedures other than those specified herein may result in hazardous laser light. Use of optical instruments with the scanner, including binoculars, microscopes, and magnifying glasses, with will increase eye damage. This does not include eyeglasses worn by the user.

LED Information

The Unitech product contains LED indicator(s) or LED ring whose luminance is not harmful to human eyes during normal operation, user maintenance or prescribed service operations.

*LED information only applies to the products with LED components.

© 2025 unitech Electronics Co., Ltd. All rights reserved.
unitech is a registered trademark of unitech Electronics Co., Ltd.
All product and company names are trademarks, service marks, or registered trademarks of their respective owners

Battery Notice

Performance and Replacement

- For optimal performance, it is recommended to replace rechargeable batteries annually or after 500 charging cycles.
- It's normal for the battery to swell or expand slightly after a year or 500 cycles. This doesn't cause damage but indicates the battery should be replaced and disposed of properly according to local regulations.
- If battery performance drops by more than 20%, it has reached its end of life and should be replaced and disposed of properly.

Battery Life and Conservation

- Battery life depends on the battery type and device usage.
- Avoid fully discharging the battery as this puts stress on it. Several partial charges are better than one full discharge.
- Do NOT expose the battery or device to high temperatures for extended periods, such as in a parked car on a hot day or under direct sunlight. High temperatures can damage the battery. Keep the device within acceptable operating temperatures (refer to the specifications).
- For long-term storage, charge the battery to at least 50% every six months. Leaving the battery uncharged for extended periods will reduce its lifespan.
- If the battery cannot be charged after a long idle period and starts to heat up, do not attempt to charge it. It may be damaged.

Important Cautions

- **Use original batteries only from Unitech.** Using third-party batteries can damage the device and void the warranty.
- **Risk of explosion if the battery is replaced incorrectly.** Dispose of used batteries according to instructions.
- RISK OF EXPLOSION IF BATTERY IS REPLACED INCORRECTLY.
  DISPOSE OF USED BATTERIES ACCORDING TO THE INSTRUCTIONS.
- 電池若未正確更換，可能會爆炸。請用原廠建議之同款或同等級的電池來更換，請依原廠指示處理廢電池。

© 2025 unitech Electronics Co., Ltd. All rights reserved.
unitech is a registered trademark of unitech Electronics Co., Ltd.
All product and company names are trademarks, service marks, or registered trademarks of their respective owners

- 请依制造商说明书处理用过之电池，如果更换不正确之电池行事会有爆炸的风险，请依制造商说明书处理用过之电池。

Charging

- Consider temperature when charging. Charging is most efficient at room temperature or slightly cooler.
- Charge batteries within the specified range of 0°C to 40°C (32°F to 104°F). Charging outside this range can damage the battery and shorten its lifespan.
- **Do not charge batteries below 0°C.** This is dangerous and can make the batteries unstable. Use a battery temperature detecting device to ensure safe charging temperatures.

Maintenance and Safety

- Keep all connectors free of contaminants like dust, grease, mud, and water to ensure proper device operation. Neglecting this can cause communication issues, short circuits, or overheating.
- **To clean the battery connectors:**
  - Remove the main battery from the mobile computer.
  - Dip the cotton part of a cotton-tipped applicator in isopropyl alcohol.
  - Gently rub the cotton part of the applicator back and forth across the connectors on both the battery and the device to remove any grease or dirt. Ensure no cotton residue is left on the connectors.
  - Repeat this process at least three times.
  - Use a dry cotton-tipped applicator and repeat steps 3 and 4.
  - Inspect the area for any remaining grease or dirt and repeat the cleaning if needed.
- **To clean the cradle connectors:**
  - Disconnect the DC power cable from the cradle.
  - Dip the cotton part of a cotton-tipped applicator in isopropyl alcohol.
  - Rub the cotton part of the applicator along the pins of the connector, moving it back and forth gently from one side to the other. Do not leave any cotton residue on the connector
  - Rub all sides of the connector with the applicator
  - Remove any lint left by the applicator
  - If there is grease or dirt on other areas of the cradle, use a lint-free cloth and alcohol to clean them

© 2025 unitech Electronics Co., Ltd. All rights reserved.
unitech is a registered trademark of unitech Electronics Co., Ltd.
All product and company names are trademarks, service marks, or registered trademarks of their respective owners

- Allow the alcohol to air dry for at least 10 to 30 minutes (depending on the ambient temperature and humidity) before powering on the cradle

CAUTION! *If you clean the battery or cradle connectors with bleach-based chemicals, follow the instructions above to remove any bleach residue from the connectors.*

- If a connector is damaged, have it repaired before using the device to avoid short circuits.
- While charged batteries can be left unused for several months, their capacity may decrease due to internal resistance buildup. They may need recharging before use.
- Store batteries at temperatures between -20°C to 60°C. Higher temperatures can cause faster depletion. Room temperature storage is recommended.
- The above storage information applies only to removable batteries. For devices with non-removable batteries, refer to the product specifications.

Battery Safety Guidelines

- Charge the device in a clean area, away from debris, flammable materials, or chemicals. Take extra care when charging in non-commercial environments.
- Improper battery use can lead to fire, explosion, or other hazards.
- Do not disassemble, open, crush, bend, deform, puncture, or shred the battery.
- Dropping the device can cause the battery to overheat.
- Do not short-circuit the battery or allow metal or conductive objects to touch the battery terminals.
- Do not modify the battery, insert foreign objects, expose it to water or other liquids, or expose it to fire, explosion, or other hazards.
- Do not leave or store the device in hot areas, like parked cars or near heat sources. Do not put the battery in a microwave or dryer.
- Supervise battery usage by children.
- If swallowed, seek medical advice immediately.
- In case of leakage, avoid contact with skin and eyes. If contact occurs, flush the affected area with water for 15 minutes and seek medical advice.
- If you suspect damage to the equipment or battery, contact your service provider for inspection.

© 2025 unitech Electronics Co., Ltd. All rights reserved.
unitech is a registered trademark of unitech Electronics Co., Ltd.
All product and company names are trademarks, service marks, or registered trademarks of their respective owners

Product Operation and Storage Notice

The Unitech product has applicable operation and storage temperature conditions. Please follow the limitation of suggested temperature conditions to avoid failure, damage or malfunction.

**For applicable temperature conditions, please refer to the specification of each product.*

Adapter Notice

1. Please do not leave the power adapter in the socket when it is not connected to your Unitech product for charging.
2. Please remove the power adapter when the battery is fully recharged.
3. The bundled power adapter that comes with your Unitech product is not meant to be used outdoors. An adapter exposed to water or rain, or a very humid environment can cause damage to both the adapter and the product.
4. Please only use the bundled power adapter or same specification of adapter to charge your Unitech product. Using the wrong power adapter can damage your Unitech product.

**The message above only applies to the product connected to the adapter.*
For the products without using the adapters, please refer to the specification of each product.

© 2025 unitech Electronics Co., Ltd. All rights reserved.
unitech is a registered trademark of unitech Electronics Co., Ltd.
All product and company names are trademarks, service marks, or registered trademarks of their respective owners

Hearing Damage Warning

To prevent possible hearing damage, do not listen at high volume levels for long periods.

Figure 1 – Warning label (IEC 60417-6044)

© 2025 unitech Electronics Co., Ltd. All rights reserved.
unitech is a registered trademark of unitech Electronics Co., Ltd.
All product and company names are trademarks, service marks, or registered trademarks of their respective owners

Worldwide Support

Unitech's professional support team is available to quickly answer questions or assist with technical-related issues. Should an equipment problem occur, please contact the nearest Unitech regional service representative.

For complete contact information please visit the Web sites listed below:

Taipei, Taiwan – Headquarters	Europe & Africa
Tel: +886-2-89121122 **E-mail:** info@hq.ute.com **Address:** 5F, No. 136, Lane 235, Baoqiao Road, Xindian District, New Taipei City 231, Taiwan (R.O.C.) **Website:** http://www.ute.com	**Tel:** +31-13-4609292 **E-mail:** info@eu.ute.com **Address:** Kapitein Hatterasstraat 19, 5015 BB, Tilburg, the Netherlands **Website:** http://eu.ute.com
Mainland China	**Japan**
Tel: +86-59-2310-9966 **E-mail:** info@cn.ute.com **Address:** Room401C, 4F, RIHUA International Mansion, Xinfeng 3nd Road, Huoju Hi-tech District, Xiamen, Fujan, China **Website:** http://cn.ute.com	**Tel:** +81-3-62310896 **E-mail:** info@unitech-japan.co.jp **Address:** 3F Tosei Building, 18-10, Nihonbashi-Hakozakicho, Cyuouku, Tokyo 103-0015, Japan **Website:** https://jp.ute.com
Asia & Pacific / Middle East	**Latin America**
Tel: +886-2-27911556 **E-mail:** info@tw.ute.com **Address:** 4F., No. 236, ShinHu 2nd Rd., NeiHu Chiu, 114, Taipei,Taiwan **Website:** http://apac.ute.com	**Tel:** +52-55-5171-0528 **E-mail:** info@latin.ute.com **Address:** Av Insurgentes Sur Nro. 859-Segundo Piso Colonia Nápoles - Delegación Benito Juárez - CP03810 CDMX **Website:** http://latin.ute.com
North America	**Please scan QRCode to visit us:**
Tel: +1-714-8916400 **E-mail:** info@us.ute.com / info@can.ute.com **Address:** 6182 Katella Ave, Cypress, CA 90630, USA **Website:** http://us.ute.com	

© 2025 unitech Electronics Co., Ltd. All rights reserved.
unitech is a registered trademark of unitech Electronics Co., Ltd.
All product and company names are trademarks, service marks, or registered trademarks of their respective owners

Warranty Policy

The following items covered under the Unitech Limited Warranty are free from defects during normal use:

The warranty period is varied from each country. Please consult with your supplier or Unitech local office for actual length of warranty period to your purchased product.

Warranty becomes void if equipment is modified, improperly installed or used, damaged by accident or neglect, or if any parts are improperly installed or replaced by the user.

© 2025 unitech Electronics Co., Ltd. All rights reserved.
unitech is a registered trademark of unitech Electronics Co., Ltd.
All product and company names are trademarks, service marks, or registered trademarks of their respective owners

Privacy Policy

This policy is developed in accordance with EN 18031 and the GDPR and applies to all Unitech products and services, including but not limited to rugged mobile devices, barcode scanners, mobile applications, and backend platform systems. Unitech respects your privacy and is committed to processing personal data in accordance with the principles of lawfulness, fairness, transparency, and data minimization.

Data Controller

Company Name: Unitech Electronics Co., LTD

Address: 8F, No. 122, Ln. 235, Baoqiao Rd., Xindian Dist., New Taipei City 231, Taiwan

Email: info@hq.ute.com

Website: https://www.ute.com

A. Lawful Basis of Processing

We collect and process your personal data only when there is a lawful basis to do so. These bases include:

1. To fulfill contractual obligations (e.g., account registration, device activation, after-sales support)
2. To comply with legal obligations (e.g., tax compliance, security incident reporting)
3. Based on your explicit consent (e.g., enabling location or integrating with third-party platforms)
4. To pursue legitimate interests of Unitech or third parties (e.g., abuse detection, service security)

© 2025 unitech Electronics Co., Ltd. All rights reserved.
unitech is a registered trademark of unitech Electronics Co., Ltd.
All product and company names are trademarks, service marks, or registered trademarks of their respective owners

B. Categories of Personal Data Collected

We may collect your information through:

1. Information you voluntarily provide (e.g., repair requests, registration, technical support)
2. Data automatically generated during your use of our products or services
3. Information lawfully obtained from authorized third parties

Types of data include:

- Device Information: such as serial number, IMEI, MAC address, OS, and model name
- Application and Log Data: including installed application lists, usage records, error logs, and crash reports
- Operational Data: such as scanned barcode content, photos, GPS information, Wi-Fi or mobile IP address, and usage timestamps
- Account Data: including system login username and email address (as configured by authorization)
- Biometric Data: such as facial or fingerprint recognition (stored locally on the device and not uploaded)
- Location Information: GPS, Wi-Fi, or cell tower data collected when location services are enabled
- Configuration Parameters: system and application settings stored locally or on cloud service servers
- Mobile Network Information: such as ICCID, IMSI, carrier name, mobile network type, SIM slot usage, and phone number (if available). This data is primarily used for mobile communication features, device identification, and diagnostic analysis

© 2025 unitech Electronics Co., Ltd. All rights reserved.
unitech is a registered trademark of unitech Electronics Co., Ltd.
All product and company names are trademarks, service marks, or registered trademarks of their respective owners

C. Use of Personal Data

When you use our products or services, we may process your personal data for the following purposes:

1. Providing core product functions, such as login, barcode scanning, data synchronization, and location services
2. Assisting with account registration, preference settings, and device activation
3. Delivering system notifications and update alerts (e.g., firmware upgrades)
4. Analyzing error data for device diagnostics and maintenance support
5. Integrating third-party enterprise management platforms (e.g., MDM or cloud systems), based on your consent
6. Enabling security authentication and device identification
7. Enhancing the overall user experience and optimizing our products and services, including statistical analysis and usage trend research

Unitech does not use your personal data for targeted advertising or profiling, nor do we sell your data to any third parties.

D. Delegated Processing, Sharing, Transfers, and Disclosures of Personal Data

We may process or share your personal data under the following circumstances:

1. Delegated Processing: We may engage trusted third-party service providers to assist with device operations, remote support, or related services. In such cases, we will enter into data protection agreements with those vendors and require that they process personal data in accordance with this policy.
2. Data Sharing: We do not share your personal data with third parties without your prior consent, unless required by law or when the service you use integrates with third-party platforms (e.g., MoboLink, device management systems).
3. Data Transfers: In the event of a corporate merger, acquisition, or bankruptcy that results in data transfer, we will notify you and ensure that the recipient continues to comply with this privacy policy.
4. Public Disclosure: Your data may be disclosed only when required by applicable law or with your explicit authorization, such as during regulatory investigations or legal proceedings.

© 2025 unitech Electronics Co., Ltd. All rights reserved.
unitech is a registered trademark of unitech Electronics Co., Ltd.
All product and company names are trademarks, service marks, or registered trademarks of their respective owners

E. Protection of Children's Personal Data

This product and its associated services are not intended for children under the age of 13, and we do not knowingly collect personal data from children. If we become aware that personal data from a child has been inadvertently collected, we will take prompt steps to delete the data and cease any further processing. Parents or legal guardians may contact us to request deletion.

F. Security Measures for Personal Data Protection

We are committed to ensuring the security of your personal data and have implemented a range of measures, including but not limited to, the following:

1. Use of encrypted communication and secure storage technologies
2. Implementation of user authentication and access control mechanisms
3. Logging of data access and monitoring of abnormal behavior
4. Restriction of access to personal data to authorized personnel only, all of whom are bound by confidentiality obligations
5. Regular vulnerability scanning, patching, and risk assessments

In the event of a data breach, we will take appropriate action and notify the relevant authorities in accordance with applicable laws and regulations.

G. Data Accuracy and Integrity

We collect and process personal data solely for specified and legitimate purposes. Measures such as data validation, user authorization, and system controls are implemented to ensure the accuracy, integrity, and timeliness of the information.

© 2025 unitech Electronics Co., Ltd. All rights reserved.
unitech is a registered trademark of unitech Electronics Co., Ltd.
All product and company names are trademarks, service marks, or registered trademarks of their respective owners

H. Cross-Border Transfer of Personal Data

Some of our servers or services may be located outside your jurisdiction. Where cross-border transfer of personal data is necessary, we will comply with applicable local laws and implement appropriate safeguards, such as Standard Contractual Clauses (SCCs), encryption measures, or security assessments, to ensure the confidentiality and integrity of your information.

I. Data Retention

We retain your personal data only for as long as necessary to fulfill the purposes for which it was collected. Once the retention period has expired, we will delete, anonymize, or de-identify the data in accordance with its nature and applicable legal requirements, ensuring that it can no longer be identified or reconstructed.
Certain types of data—such as transaction records, customer support logs, and error reports—may be retained for longer periods to comply with legal obligations, auditing requirements, information security policies, dispute resolution needs, or service improvement purposes. We regularly review the necessity of such retention in accordance with data minimization and security principles.

J. Personal Data Rights

You have the following rights regarding your personal data:

- To request access to the personal data we hold about you
- To request rectification, supplementation, or erasure of inaccurate or outdated data
- To withdraw your consent to data processing (where applicable)
- To request data portability or the deletion of your account

To exercise any of the above rights, please contact us at info@hq.ute.com. In accordance with the GDPR, we will respond to your request within 30 days of receipt. If your request is particularly complex or numerous, we may extend this period by up to an additional two months and will inform you of the reason for the extension within the first month.

© 2025 unitech Electronics Co., Ltd. All rights reserved.
unitech is a registered trademark of unitech Electronics Co., Ltd.
All product and company names are trademarks, service marks, or registered trademarks of their respective owners

K. Privacy Policy Updates

This Privacy Policy may be updated from time to time to reflect changes in our business practices or legal obligations. If any material changes are made to the purposes or scope of personal data usage, we will notify you in accordance with applicable legal requirements. The latest version will be incorporated into the product user manual.

L. Disclaimer

While we implement reasonable and appropriate security measures to protect your personal data, you acknowledge that no system can eliminate all risks inherent in operating over open networks. Unitech shall not be held liable for any unauthorized access, use, disclosure, or destruction of personal data caused by third parties beyond our control. You are responsible for safeguarding your account credentials, and Unitech will not be held liable for any data breach or damages resulting from user negligence.

M. Contact Us

If you have any questions, suggestions, or requests regarding this Privacy Policy or the protection of your personal data, please contact us using the information below:
Email: info@hq.ute.com
Website: https://www.ute.com/en/contact

Note:

Please read this Privacy Policy carefully before using this product. You may choose whether to enable certain features (such as location services or network synchronization). By enabling such features, you consent to the collection and processing of your personal data as necessary for the operation of those features.

© 2025 unitech Electronics Co., Ltd. All rights reserved.
unitech is a registered trademark of unitech Electronics Co., Ltd.
All product and company names are trademarks, service marks, or registered trademarks of their respective owners

Table of Contents

Preface i

Regulatory Compliance Statements i
Laser Information vii
LED Information vii
Battery Notice viii
Adapter Notice xi
Hearing Damage Warning xii
Worldwide Support xiii
Warranty Policy xiv
Privacy Policy xv

Chapter 1 - Overview 1

1.1 Package 1
1.2 Product Detail 2
1.3 Specifications 3
1.4 Getting Started 5

© 2025 unitech Electronics Co., Ltd. All rights reserved.
unitech is a registered trademark of unitech Electronics Co., Ltd.
All product and company names are trademarks, service marks, or registered trademarks of their respective owners

Chapter 1 - Overview

1.1 Package

Please make sure the following contents are in the RP300 gift box. If something is missing or damaged, please contact your Unitech representative.

The Package Contents

- RP300
- Battery
- Wrist Lanyard
- RFID Tag*5
- RFID Device QR Code Card

Optional accessories

- RP300 Gun Battery (7000 mAh)
- USB-C Adapter (45W)
- 1-Slot Charging Cradle
- 3-Pin Power Cord (EU / US / UK)
- Holder for EA660

© 2025 unitech Electronics Co., Ltd. All rights reserved.
unitech is a registered trademark of unitech Electronics Co., Ltd.
All product and company names are trademarks, service marks, or registered trademarks of their respective owners

1.2 Product Detail

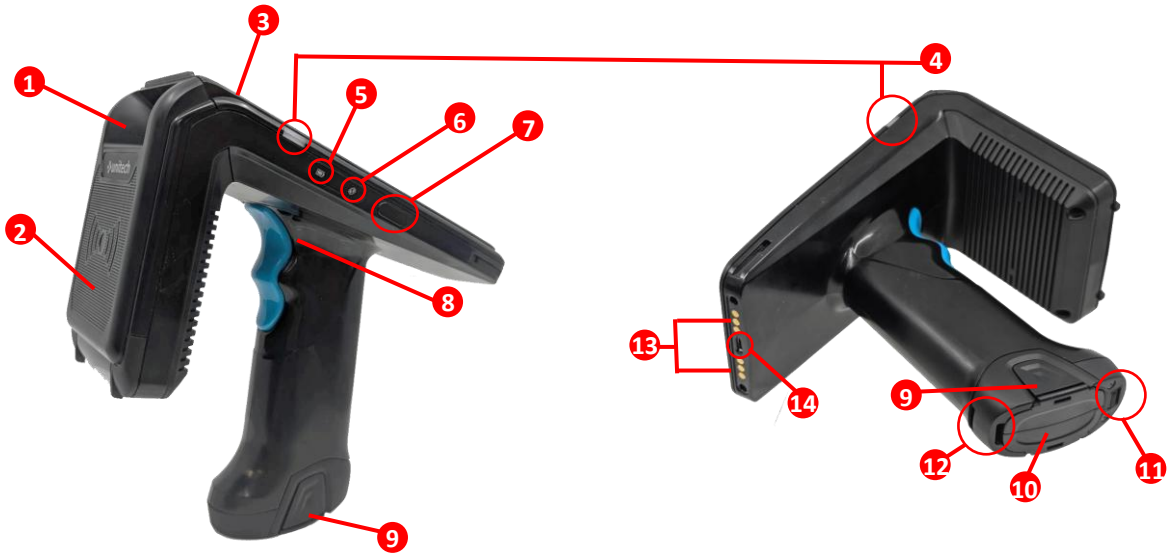

1. Scan Window
2. Antenna Area
3. Top Cover
4. Status LED
5. Power LED
6. Communication LED
7. Communication Key (BT / USB)
8. Trigger Key (RFID / Barcode)
9. Battery Release Key
10. Battery
11. Battery Lock
12. Hand Strap Attachment Point
13. POGO Pin
14. USB-C Port

© 2025 unitech Electronics Co., Ltd. All rights reserved.
unitech is a registered trademark of unitech Electronics Co., Ltd.
All product and company names are trademarks, service marks, or registered trademarks of their respective owners

1.3 Specifications

RFID Performance	
RF Chip	Impinj E710
Max. Output Power	5 ~ 33 dBm (Adjustable)
Max. Read Range	25M
Max. Read Rate	Over 1,000 tags per second
Symbologies	
2D	Zebra SE4107 (option)
RFID	
UHF	EPCglobal Class1 Gen2 V2; Gen2X 865MHz ~ 928MHz (US/EU/JP/TW/CN)
Communication	
Host Connection	USB-C Bluetooth 5.3 (SPP / HID / iAP2) Pogo Pin NFC quick pairing Customized holder (for unitech EA660 & EA530; for iOS devices) OtterBox uniVERSE Case System
Indicator	
4 LEDs: Status LED * 2 / Power LED * 1 / Communication LED * 1 / Buzzer	
Software	
TagAccess, RFID SDK	
Power Source	
Main Battery	7,000 mAh, Quick-Release
Charging	Able to charge host device simultaneously (EA530 & EA660)
Push Button	1 Multi-Function Trigger 1 communication (BT / USB)
Regulatory Approvals	
MFi (Coming Soon) TELEC, NCC, FCC, CE, BSMI, VCCI	
Enclosure	
Dimensions	172.02 x 81.00 x 156.36 mm (W x H x D)
Weight	564g (with 2D engine)

© 2025 unitech Electronics Co., Ltd. All rights reserved.
unitech is a registered trademark of unitech Electronics Co., Ltd.
All product and company names are trademarks, service marks, or registered trademarks of their respective owners

Environmental	
Operating Temperature	With iOS: 0°C to 35°C With EA530, EA660: -20°C to 50°C
Storage Temperature	-40°C to 70°C
Humidity	5% to 95% RH (non-condensing)
Electrostatic Discharge	+/-15kV air discharge +/-8kV contact discharge
Durability	
Drop Specification	1.5M

	AT	BE	BG	HR	CY	CZ	DK
	EE	FI	FR	DE	EL	HU	IE
	IT	LV	LT	LU	MT	NL	PL
	PT	RO	SK	SI	ES	SE	UK
	IS	LI	NO	CH	TR		

© 2025 unitech Electronics Co., Ltd. All rights reserved.
unitech is a registered trademark of unitech Electronics Co., Ltd.
All product and company names are trademarks, service marks, or registered trademarks of their respective owners

1.4 Getting Started

Replacing the Battery

This section describes how to replace the battery.

CAUTION! *The battery is designed to be removed by hand. Do not use tools to remove the battery.*

NOTE: *Do not put labels, asset tags, engravings, stickers, or other objects in the battery slot, as this might compromise the performance of the device or accessories. Performance levels, such as sealing [Ingress Protection (IP)], impact performance (drop and tumble), functionality, or temperature resistance could be affected.*

NOTE: *If the hand strap is attached, remove the hand strap clip first.*

1.4.1 Install the Battery

Align the battery into the battery slot from the bottom, then press down until you hear a **"CLICK"** sound.

1.4.2 Remove the Battery

Unlock and hold the battery latch, then grasp both sides of the battery release keys and pull out the battery to remove it.

© 2025 unitech Electronics Co., Ltd. All rights reserved.
unitech is a registered trademark of unitech Electronics Co., Ltd.
All product and company names are trademarks, service marks, or registered trademarks of their respective owners

1.4.3 How to Attach the Wrist Lanyard

1. Insert one end of the wrist lanyard through the hand strap attachment point on the bottom of the RP300.

2. Pull the other end through the top opening to secure.

Note:

If you need to attach the wrist lanyard, it is recommended to do so before installing the battery

© 2025 unitech Electronics Co., Ltd. All rights reserved.
unitech is a registered trademark of unitech Electronics Co., Ltd.
All product and company names are trademarks, service marks, or registered trademarks of their respective owners

1.4.4 Holders Setup

RP300 supports multi-platform applications: Standalone Use, Android Compatibility, and iOS Compatibility.

Standalone Use	Android Compatibility (Requires optional holder accessories)	iOS Compatibility (Requires optional holder accessories)

Upper Trigger Key: Scan Barcodes

Lower Trigger Key: Read RFID tags

Both Triggers: Scan barcode or read RFID depending on the target

© 2025 unitech Electronics Co., Ltd. All rights reserved.
unitech is a registered trademark of unitech Electronics Co., Ltd.
All product and company names are trademarks, service marks, or registered trademarks of their respective owners

1.4.5 How to Mount the Device (EA660)

1. Remove the Top Cover.

2. Align the holder's POGO Pin with the center POGO Pin slot and press it firmly into place.

Mount the Holder

3. Use a screwdriver to secure the four large screws at each corner.

© 2025 unitech Electronics Co., Ltd. All rights reserved.
unitech is a registered trademark of unitech Electronics Co., Ltd.
All product and company names are trademarks, service marks, or registered trademarks of their respective owners

4. Slide the EA660 into the holder and insert the bottom USB-C port into the holder's USB-C connector.

Remove the EA660

The EA660 can be easily removed by sliding it upward.

5. Attach the bumper and tighten the small screws on both sides using a screwdriver.

© 2025 unitech Electronics Co., Ltd. All rights reserved.
unitech is a registered trademark of unitech Electronics Co., Ltd.
All product and company names are trademarks, service marks, or registered trademarks of their respective owners

1.4.3 Charging the Battery

We highly recommend using the original adapter. If you use a different adapter, please ensure that you follow the guidelines below before charging:

a. Use a PD Fast Charging Adapter
b. Recommended to use 45W Adapter (or up to 45W)

1. Insert one end of the USB-C cable into the port on the RP300, and plug the other end into a socket.
2. When mounting an iOS device, charging is not supported; Android devices can be charged simultaneously.
3. Supports PD charging to fully charge the RP300 within 2 hours. (depending on the specific adapter)

Before starting to use the device, we would like to suggest you follow the illustrations below to begin to use the RP300.

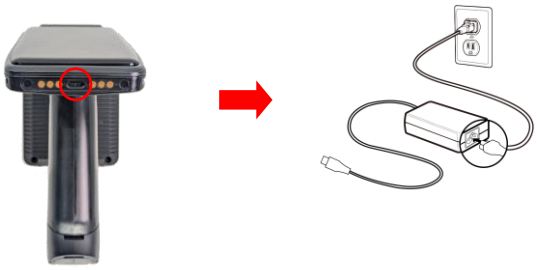

WARNING! *There is a risk of fire and burns if the battery is handled improperly. DO NOT disassemble, crush, puncture, short external contacts, or dispose the battery pack in fire or water. DO NOT attempt to open or service the battery. Dispose of used batteries according to local recycling guidelines in your area.*

WARNING! *To ensure the unit working properly, please keep all connectors away from the contaminants such as dust, grease, mud, and water. Negligence may cause the unit to lose communication, short circuit, or overheated. If the connector is damaged, please ensure the connector is fully repaired before using the unit to avoid short-circuit.*

DO *charge between 20% and 80% to protect your battery.*
Avoid *full discharges (<0%) or charging all the time (always 100%) to reduce stress on the battery.*

© 2025 unitech Electronics Co., Ltd. All rights reserved.
unitech is a registered trademark of unitech Electronics Co., Ltd.
All product and company names are trademarks, service marks, or registered trademarks of their respective owners

1.5.4 Checking the LED Status

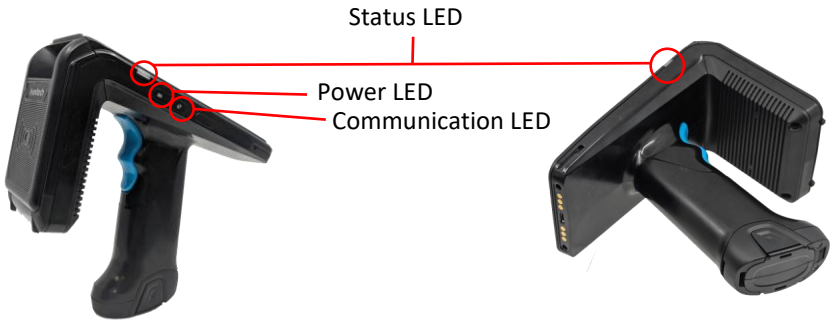

Status LED			
Status	**LED**	**Beeper**	**Description**
Barcode Scan Decode / RFID Decode	Green	One Short Beep	Decode Successfully
Scan Error / RFID Error	Red for 2 Sec.	High-Low-High-Low-High	When any of the following occurs: ・Battery Level Below 5% ・Internal Buffer Full ・Data Transmission Failure

Power LED			
Status	**LED**	**Beeper**	**Description**
Battery Level **(No external power supply connected)**	Green	-	Battery Level over 50%
	Green Blinks Once Every 2 Sec.	-	Battery Level over 20%
	Red	-	Battery Level over 5%-20%
	-	One Beep	Battery Level Below 5% (Enter Low Power Mode)
	-	-	Suspend or Low Power Mode
Charging **(External power supply connected)**	Green Blinks Once Every Sec.	One Beep	Battery Charging
	Red Blinks Once Every Sec.	High-Low-High-Low-High	Battery Charging Error
	Green	One Beep	Battery Fully Charged (100%)

Communication LED			
Status	**LED**	**Beeper**	**Description**
BT SPP Mode	Green Blinks Once Every Sec.	-	Waiting for BT Connection
	Blue	- Connection: Ascending triplet - Disconnection: Descending triplet	BT Connected
BT HID Mode	Green Blinks Twice Shortly Every 2 Sec.	-	Waiting for BT Connection
	Blue	- Connection: Ascending triplet - Disconnection: Descending triplet	BT Connected

© 2025 unitech Electronics Co., Ltd. All rights reserved.
unitech is a registered trademark of unitech Electronics Co., Ltd.
All product and company names are trademarks, service marks, or registered trademarks of their respective owners

Communication LED			
Status	**LED**	**Beeper**	**Description**
USB Mode	Red Blinks Once Every Sec.	-	Waiting for USB Connection
	Red	- Connection: Ascending triplet - Disconnection: Descending triplet	USB Connected
FW Update	Blue & Red Flash Alternately at High Speed	- Success: One Long Beep - Fail: High-Low-High-Low-High	FW Update in Progress

Note:

When not connected to a host device, the RP300 automatically switches to Batch Mode and stores data locally. Once connected to an Android or iOS device, Batch Mode is disabled and the data is transferred to the host.

© 2025 unitech Electronics Co., Ltd. All rights reserved.
unitech is a registered trademark of unitech Electronics Co., Ltd.
All product and company names are trademarks, service marks, or registered trademarks of their respective owners