Smart Environmental Monitor & Controller

Air Monitor MATE

Fan Speed Timer

Touch Button Description-I

Fan Speed

Short Touch: Manual Speed 1 > Manual Speed 2 > Manual Speed 3 > Automatic Control
Long Touch: Stop

When switching to manual speed, the timer will be set to 30 minutes by default.
After 30 minutes, the controller will switch to automatic mode.

Timer

In manual mode, each press on the button corresponds to 1hr increment. Once the time exceeds 6hr, the decide would be in always on mode, and the device would display 24hr.

Touch Button Description-II

Main Page Switch Button

There are 5 main pages. Press this button to switch main page sequentially.
Default Main Page > Sensor Page > Ventilation Equipment Page > Settings > About

Sub Page Switch Button

Press the button to display detailed information related to the Main page.

Setting Button

In the settings page, press the button to switch and configure options.

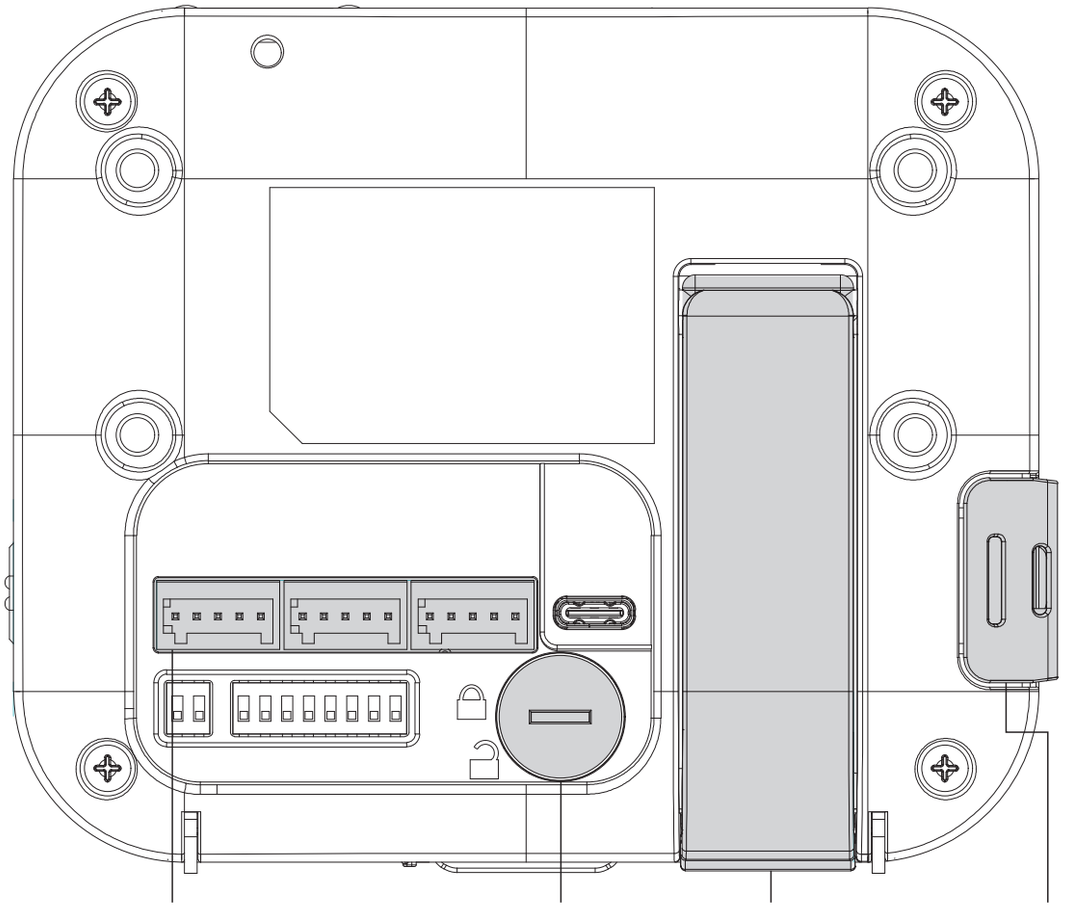

Phoneix Connectors

Normal Open						Slave		Master		Ain		Power		
1	2	3	4	AO	GND	A^+	B^-	A^+	B^-	1	2	GND	DC_{in}	DC_{out}

※ NO1-NO3 can be used for controlling fan speed in order. Only one of NO1-NO3 can be switched on at a time.

※ NO4 can be used to turn on a relay switch for further controlling a dehumidifier, compressor, or valve.

※ AO: Analog Output

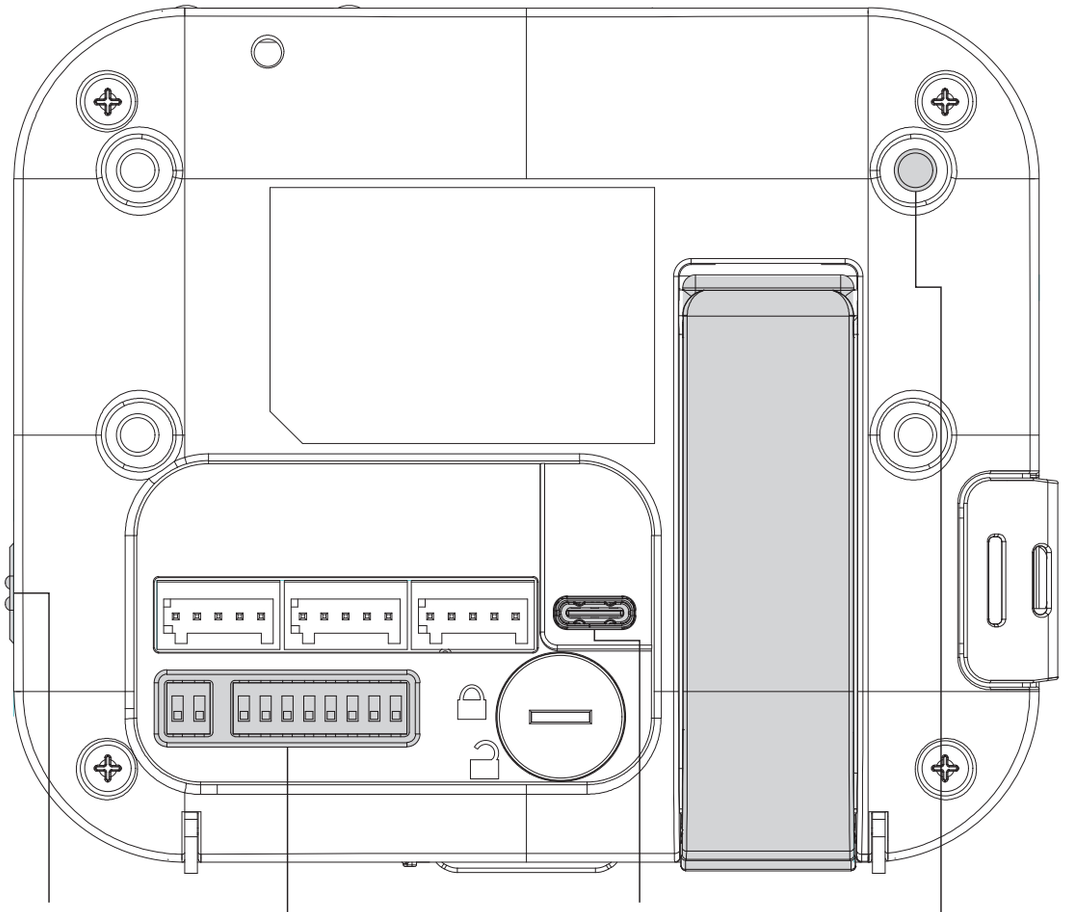
Switch for
touch lock
Dip switch
USB Type C
Power Connnector
Screw hole for
Wall Mount Plate

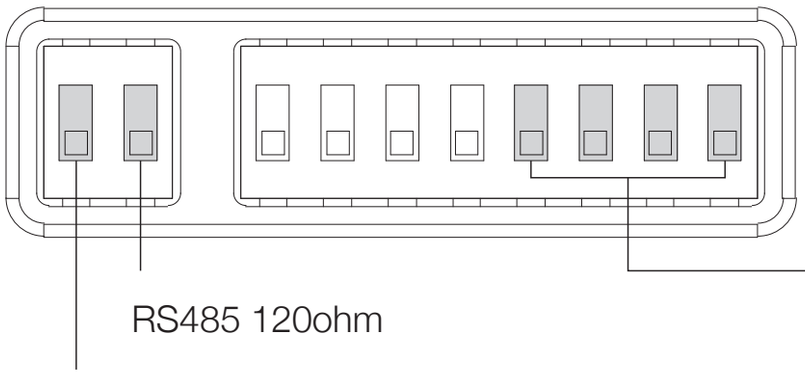
MODBUS ID: A0-AF
RS485 120ohm
LORA Version
ON: Turn on LORA communication and turn off RS485 slave function.

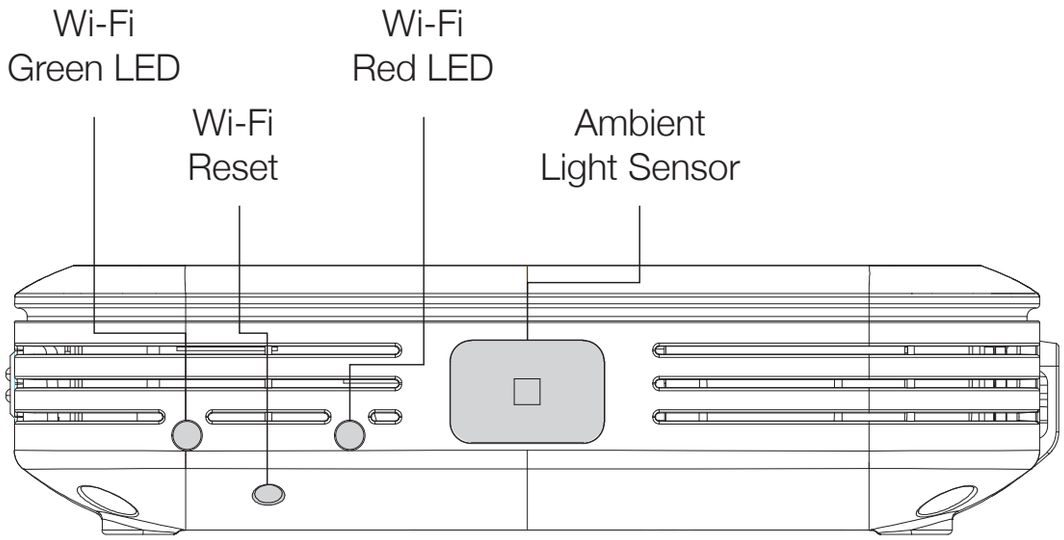

Description of Wi-Fi LED Light

Wi-Fi Status	Red	Green
Waiting for provisioning	ON	OFF
Connecting to access point	OFF	Slow flashing
Connecting to cloud server	OFF	Fast flashing
Connected to cloud server	OFF	ON
Communication Error to Sensor	Slow flashing	Slow flashing

※ Wi-Fi Reset: Long press reset button to switch Wi-Fi to provision waiting mode.

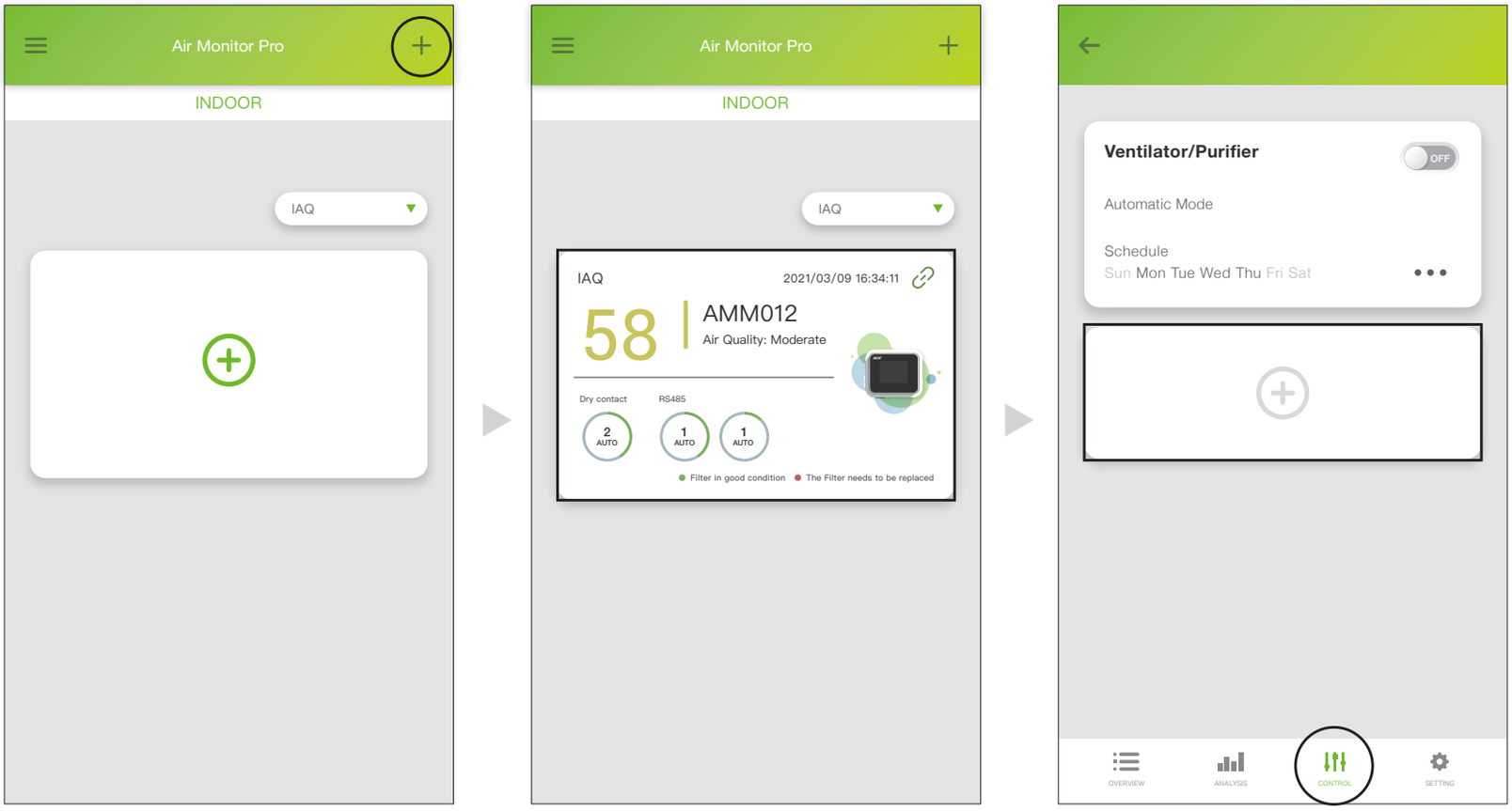

Set up cloud connection and connect to ventilation equipment

※ Launch Acer Air Monitor Pro APP

※ Click "+" to add Acer AMM Smart Environmental Monitor and Controller. Follow the steps indicated on APP to complete the settings.

※ To connect to a ventilation equipment, please click an AMM device then click "+" to select an equipment. Follow the steps indicated on APP to complete the settings.

<Notice> Scan right QR Code to download the APP.

Available on the App Store

GET IT ON Google Play

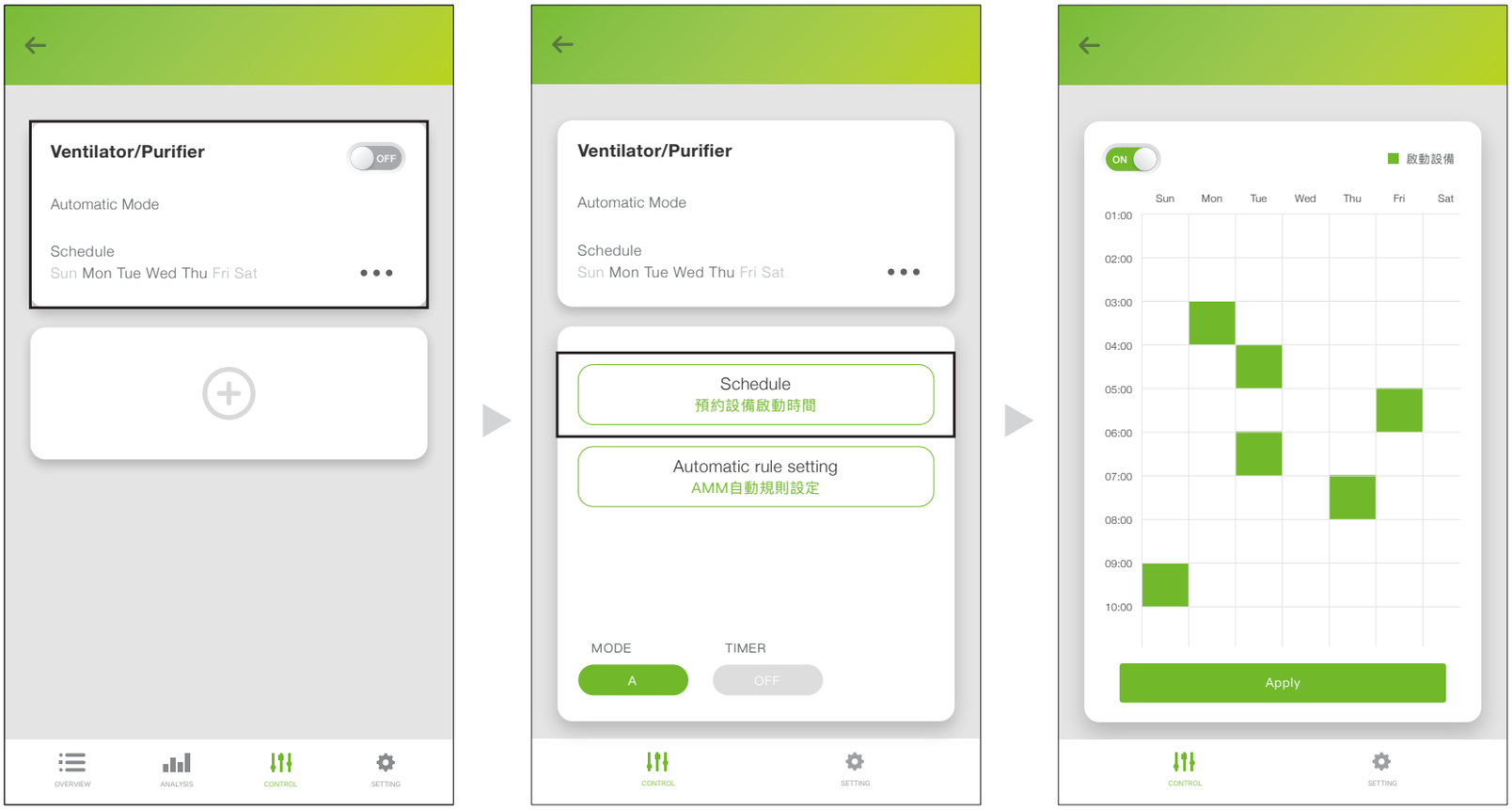

Schedule setting

※ Click a AMM device, click Control, then click "Ventilator/Purifier".

※ Click "Schedule"

※ On schedule setting page,
click on the table column corresponding to each hour to turn it on or off.

<Notice>

When the schedule control is enabled, AMM will switch to automatic control mode over time.

When the schedule is set to ON, the automatic control is started.

When the schedule is set to OFF, it turns to the off mode.

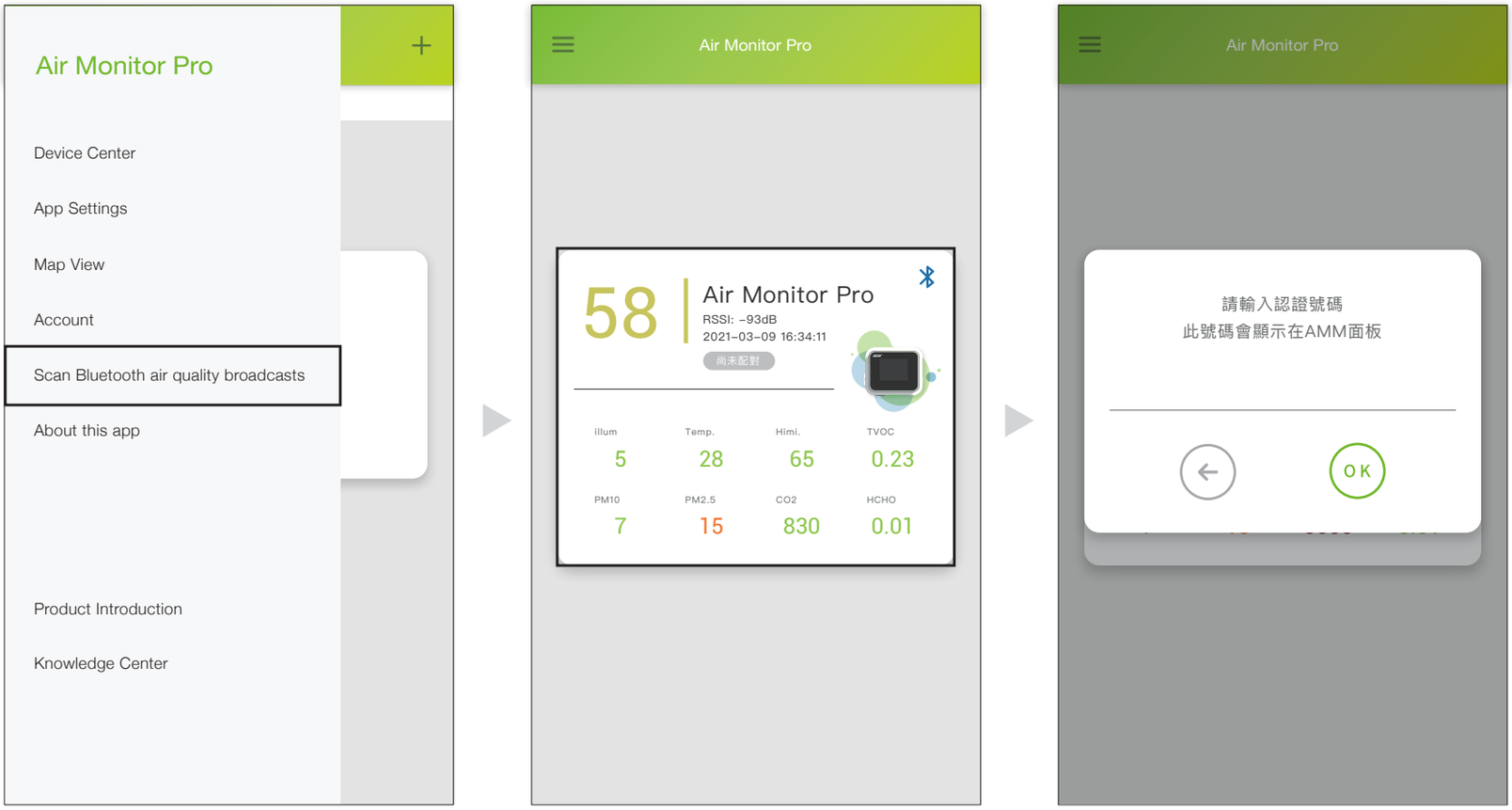

Bluetooth Remote Control

※ Launch APP

※ Click manual icon then click "Scan Bluetooth air quality broadcasts"

※ Select the AMM that has strongest signal. The LCD display on the corresponding AMM device will show a 4-digit number.

※ Input the 4-digit number on APP to complete paring process, and then you can perform remote control functions.

<Notice>

Please turn on Bluetooth on your smartphone.

The 4-digit number will disappear after 5 seconds automatically. Please complete the pairing process in time.

LORA Configuration

※ Please login the cloud account into LoRa Master device for setting the connection.

※ Once the setting is completed, you can use the APP to access the AMM.

<Notice>

Please contact business window for LORA relative functions.

FEDERAL COMMUNICATIONS COMMISSION INTERFERENCE STATEMENT

This equipment has been tested and found to comply with the limits for a Class B digital device, pursuant to part 15 of the FCC Rules. These limits are designed to provide reasonable protection against harmful interference in a residential installation. This equipment generates, uses and can radiate radio frequency energy and, if not installed and used in accordance with the instructions, may cause harmful interference to radio communications.

However, there is no guarantee that interference will not occur in a particular installation. If this equipment does cause harmful interference to radio or television reception, which can be determined by turning the equipment off and on, the user is encouraged to try to correct the interference by one or more of the following measures:

-Reorient or relocate the receiving antenna.

-Increase the separation between the equipment and receiver.

-Connect the equipment into an outlet on a circuit different from that to which the receiver is connected.

-Consult the dealer or an experienced radio/ TV technician for help.

CAUTION:
Any changes or modifications not expressly approved by the grantee of this device could void the user's authority to operate the equipment.This device complies with Part 15 of the FCC Rules. Operation is subject to the following two conditions: (1) this device may not cause harmful interference, and (2) this device must accept any interference received, including interference that may cause undesired operation.

RF exposure warning This equipment must be installed and operated in accordance with provided instructions and the antenna (s) used for this transmitter must be installed to provide a separation distance of at least 20 cm from all persons and must not be co-located or operating in conjunction with any other antenna or transmitter. End-users and installers must be provide with antenna installation instructions and transmitter operating conditions for satisfying RF exposure compliance.

Category	Item	Specification
Power	USB Type C Power Input	DC 5V 2A
	DC-in Power Input	DC 9-24V 2A
	DC-Out Power Output	DC 5V
	RTC Backup Battery	CR1220 3V Coin Battery
Human-Machine Interface	Display	TFT LCD 320x240 16bit color display
	Touch Button	5 x Capacitive Touch Button
	Air Quality Light	**Full color breathing light** **Green:** Good；**Yellow:** Moderate； **Orange:** Unhealthy for Sensitive Group **Red:** Unhealthy；**Purple:** Very Unhealthy
Sensor <Note 1>	CO_2	**Method:** NDIR (Non-Dispersion Infrared) **Range:** 0-10,000ppm **Resolution:** 1ppm
	Temperature	**Method:** Semiconductor **Range:** 0-100°C **Resolution:** 0.1°C
	Relative Humidity	**Method:** Semiconductor **Range:** 0-100% **Resolution:** 0.1%
	Particulate Matter	**Method:** Laser Scattering **Range:** 0-1,000μg/m^3

Category	Item	Specification
Sensor <Note 1>	Formaldehyde Sensor	**Method:** Electrochemical Sensor **Range:** 0-1.600ppm
	Total Volatile Organic Compound Sensor	**Method:** Semiconductor **Range:** 0-10ppm **Resolution:** 0.1°C
	Ambient Light Sensor	**Method:** Dual Diode Semiconductor **Range:** 0-10,000Lux **Resolution:** 1Lux
Communication <Note 2>	Wireless Network	2.4GHz, IEEE802.11 b, g, n
	Low Power Bluetooth	BLE 2.4GHz
	Wired Communication	MODBUS-RTU protocol over RS-485 ; 9600bps 8n1
	LORA	920MHz Peer to Peer Communication
Storage	SD-Card Slot	Micro SDCARD 32GB, FAT32 File System
Control	RS-485	MODBUS-RTU protocol over RS-485 Master 9600bps 8n1
	Analog	0-10V output control
	Digital	4 port Normal Open Control Point

<Note 1> The sensor is equipped according to the product model, and the sensor needs to be calibrated regularly.

<Note 2> The communication function is optional according to the product model.

1

Lock the barb rack to the back cover with salad head screws.

2

Lock the wall mount plate on the double box with self-tapping screws.

※ Self-tapping screws are placed in the gecko screw group.

3

Align the barb hanger with the rectangular hole on the wall mount. Past down fixed and lock with hexagon socket screws.

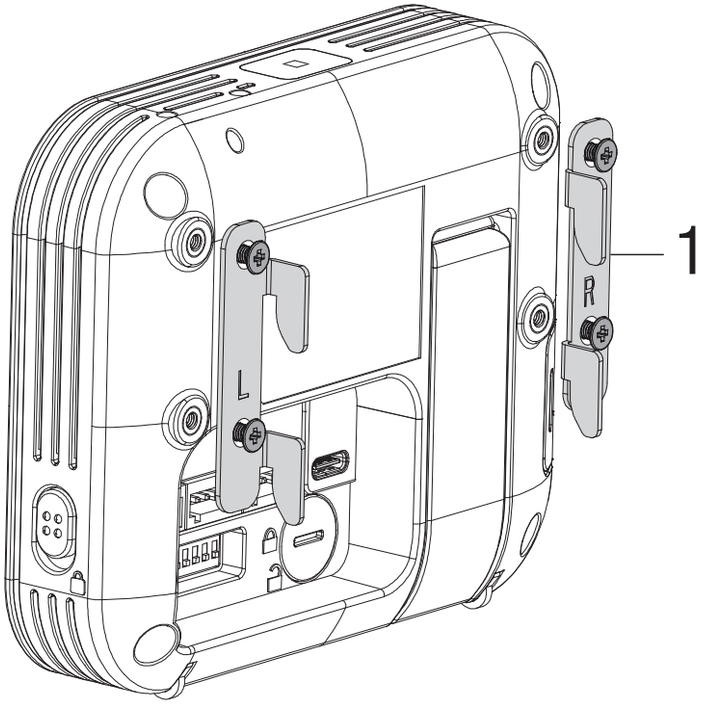

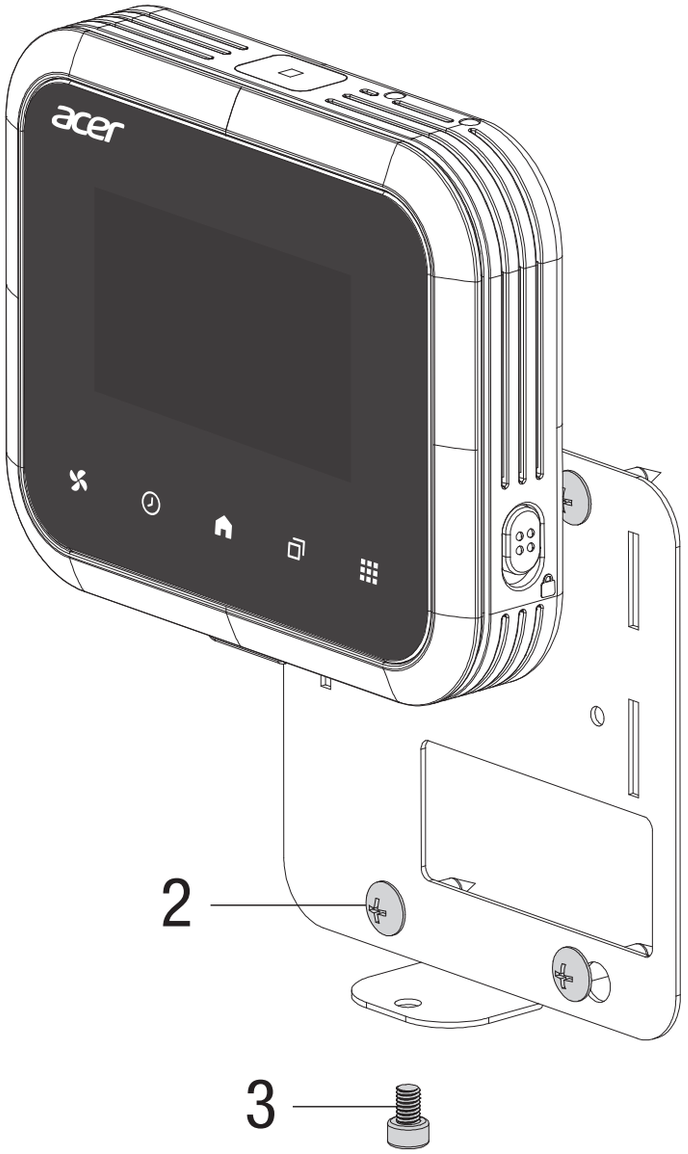

Barb hanger (L)	1	Salad head screws	4
Barb hanger (R)	1	Gecko screw group	2
Double box wall mount plate	1	Hexagon socket screws	1

<Notice>

※ This product contains a coin / button cell battery. If the coin / button cell battery is swallowed, it can cause severe internal burns in just 2 hours and can lead to death.

※ Keep new and used batteries away from children.

※ If the battery compartment does not close securely, stop using the product and keep it away from children.

※ If you think batteries might have been swallowed or placed inside any part of the body, seek immediate medical attention.

© 2021 Acer Inc. All Rights Reserved.