acer

explore beyond limits™

Liquid Z410

Your smartphone

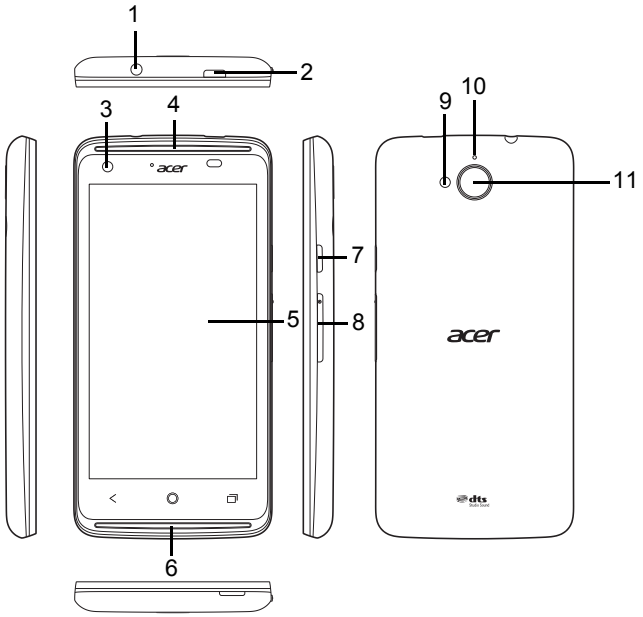

No.	Item	Description
1	3.5 mm headphone jack	Connects to stereo headphones.
2	Micro USB connector	Connects to a USB cable/ charger.
3	Front camera	Front-facing camera suitable for video chats and self-portraits.
4	Phone speaker	Emits audio from your smartphone; suitable for holding to your ear.
5	Touchscreen	Touchscreen to display data, phone content and enter information.

No.	Item	Description
6	Handsfree speaker	Emits audio from your smartphone; suitable for handsfree use.
7	Power button	Press to turn the screen on/off or enter sleep mode; press and hold to turn the smartphone on or off.
8	Volume up/ down button	Increases or decreases the phone volume.
9	Flash	LED flash for taking photos in low-light environments.
10	Microphone	Internal microphone.
11	Camera	A camera for taking high-resolution images.

Note:

For more on how your computer can help you to be more productive, please refer to the User's Manual. The User's Manual can be downloaded from the Acer support website by going to: http://go.acer.com/?id=17883

Setting up for the first time

Inserting the SIM cards and microSD card

1

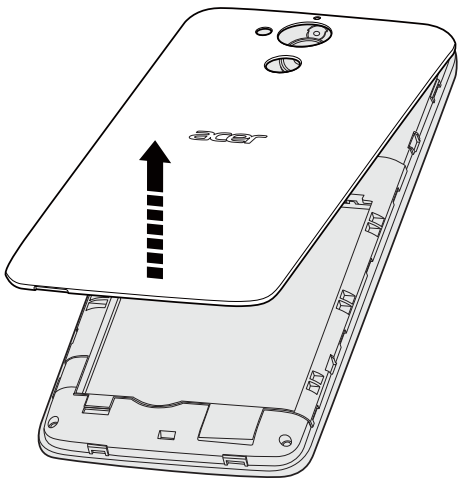

2

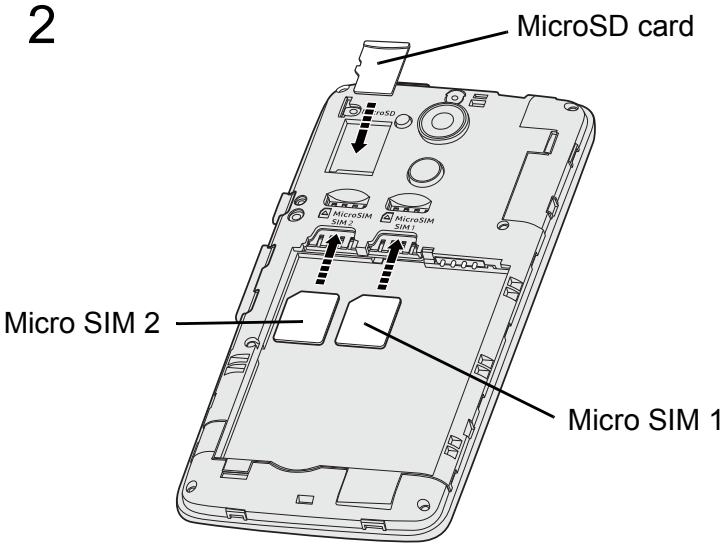

1. Remove the the cover and remove the battery.
2. Insert the micro SD card and micro SIMs as illustrated.

3

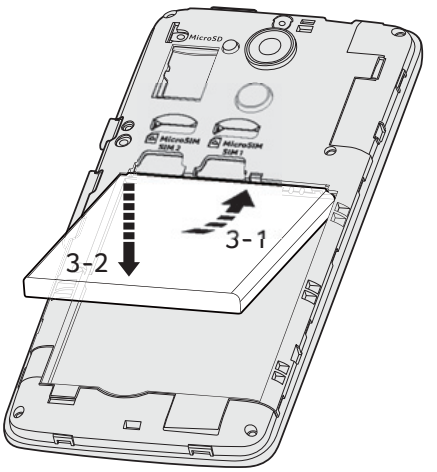

4

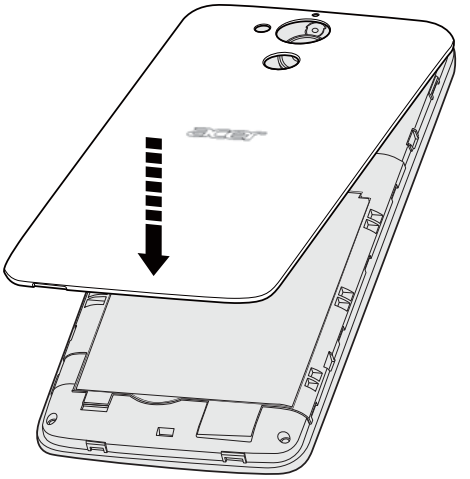

3. Align the gold-colored connectors on the battery with the connectors at the top of the battery compartment and insert the battery.
4. Replace the cover and push down until it clicks in place.

Charging your phone

For initial use, you need to charge your smartphone for eight hours. After that you can recharge the battery as needed.

Connect the AC adapter cord to the micro USB connector on your smartphone. Plug the AC adapter into any AC outlet and charge the device.

It is normal for the phone to heat up when charging or during long periods of use.

All phones are factory tested before release.

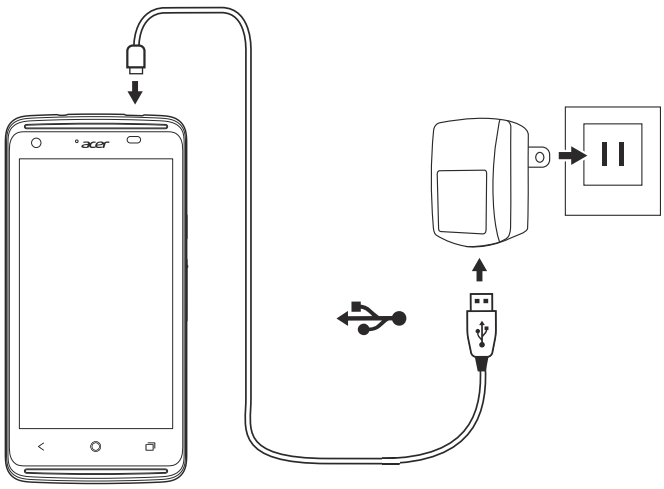

Resetting and restarting the phone

Open **Settings** from the Applications menu, then tap **Backup & reset**. Tap **Factory data reset** and then tap **Reset phone**. Tap **Erase everything** to format your phone.

If your phone is no longer responding, press and hold the power button for 15 seconds to shut the phone down. Press and hold the power button for more than 15 seconds to reboot it.

> ***Note**: Do not perform this operation if the phone is charging. Unplug the charger first.*

Making your first call

1. On the Home screen tap the **Phone** icon.
2. Enter the number you wish to dial.
3. Tap to make the call.
4. To end the call, tap .

Connecting with Wi-Fi

To connect to a Wi-Fi network, open the Application menu and then tap **Settings**. Under **WIRELESS & NETWORKS**, make sure **Wi-Fi** is on, then select a network; if necessary, enter a password to access the network.

After connecting to the internet, you can:

- Update your phone's operating system

To check for updates, open the Application menu and tap **Settings** > **About phone** > **System updates** > **Check now**.

- Create a Google account

Some apps (such as Gmail and Play Store) require a Google account. If you do not have a Google account, open the Application menu and tap **Settings** > **Add account**, select Google and then follow the instructions.

Specifications

Note
Specifications may vary depending on region and configuration.

Performance

- 1.3 GHz quad-core processor
- System memory:
  - 1 GB or 8 GB of ROM
- Android 4.4.4 KitKat operating system

Display

- 4.5" IPS qHD LCD,960 x 540 resolution (EU)
- 4.5" IPS TFT FWVGA LCD,854 x 480 resolution (US)

Multimedia

Formats supported:

Type	Formats
Image	JPEG, GIF, PNG, BMP
Audio playback	MP3, AMR, AAC LC, AAC+, eAAC+, Vorbis, FLAC, MIDI, WAVE
Ringtone	MP3, AMR, AAC LC, AAC+, eAAC+, Vorbis, FLAC, MIDI, WAVE
Video recording	H.263, H.264, MPEG4
Video playback	H.263, H.264, MPEG4, VP8

USB connector

- Micro USB connector
- USB client
- DC power-in (5 V, 2 A)

Connectivity

- Bluetooth 4.0
- IEEE 802.11b/g/n
- LTE Band 2, 4, 7, 17
- * GSM 850 / 900 / 1800 / 1900 MHz
- * WCDMA: 850 / 900 / 1900 / 2100 MHz
- HSPA+ / GPRS / EDGE
- GPS

* Frequencies depend on model.

Camera

- 5 MP rear camera
  - Auto-focus
  - LED flash
- 2 MP front camera
  - Fixed focus

Expansion

- microSD memory card slot (up to 32 GB)

Battery

- 2000 mAh Li-Polymer battery (replaceable)

Note

Length of battery operation will depend on power consumption which is based on system resource use. For example, constantly using the backlight or using power-demanding apps will shorten battery life between charges.

Dimensions

Height	136 mm
Width	66.7 mm
Thickness	9.9 mm
Weight	145 g (with battery)

Replacing the battery

Replace the battery with the same type as that which came bundled with your product. Use of another battery may present a risk of fire or explosion.

Warning! Batteries may explode if not handled properly. Do not disassemble or dispose of them in fire. Keep them away from children. Follow local regulations when disposing of used batteries.

Disposal and recycling information

Do not throw this electronic device into the trash when discarding. To minimize pollution and ensure utmost protection of the global environment, please recycle. For more information on the Waste from Electrical and Electronics Equipment (WEEE) regulations, visit

www.acer- group.com/public/Sustainability

It is compliant with WEEE regulation

RoHS compliance

This product is in compliance with Directive 2011/65/EU of the European Parliament and of the Council of 8 June 2011, on the restriction of the use of certain hazardous substances (RoHS) in electrical and electronic equipment and its amendments.

FCC regulations

This device complies with part 15 of the FCC Rules. Operation is subject to the following two conditions: (1) This device may not cause harmful interference, and (2) this device must accept any interference received, including interference that may cause undesired operation.

This device has been tested and found to comply with the limits for a Class

B digital device, pursuant to Part 15 of the FCC Rules. These limits are designed to provide reasonable protection against harmful interference in a residential installation. This equipment generates, uses and can radiated radio frequency energy and, if not installed and used in accordance with the instructions, may cause harmful interference to radio communications. However, there is no guarantee that interference will not occur in a particular installation If this equipment does cause harmful interference to radio or television reception, which can be determined by turning the equipment off and on, the user is encouraged to try to correct the interference by one or more of the following measures:

- Reorient or relocate the receiving antenna.
- Increase the separation between the equipment and receiver.
- Connect the equipment into an outlet on a circuit different from that to which the receiver is connected.
- Consult the dealer or an experienced radio/TV technician for help.

Changes or modifications not expressly approved by the party responsible for compliance could void the user's authority to operate the equipment.

IC regulations

This device complies with Industry Canada license-exempt RSS standard(s). Operation is subject to the following two conditions:

(1) this device may not cause interference, and

(2) this device must accept any interference, including interference that may cause undesired operation of the device.

Le présent appareil est conforme aux CNR d'Industrie Canada applicables aux appareils radio exempts de licence. L'exploitation est autorisée aux deux conditions suivantes:

(1) l'appareil ne doit pas produire de brouillage, et

(2) l'utilisateur de l'appareil doit accepter tout brouillage radioélectrique subi, même si le brouillage est susceptible d'en compromettre le fonctionnement."

CAN ICES-3(B)/NMB-3(B)

RF exposure information (SAR)

This device meets the FCC/IC requirements on the limitation of exposure of the general public to electromagnetic fields by way of health protection.

The unit of measurement for the FCC/IC limit is the "Specific Absorption Rate" (SAR). The SAR limit set by the FCC/IC is 1.6 W/kg, averaged over 1 g of tissue. The FCC and IC have granted an Equipment Authorization for this device with all reported SAR levels evaluated as in compliance with the FCC and IC RF exposure guidelines. SAR information on this device is on file with the FCC and can be found under the Display Grant section of www.fcc.gov/oet/ea/fccid after searching on the FCC ID for your device, which can be found on the product labeling of your device.

For body-worn operation, this device has been tested use with accessories that contain no metal and that position the handset a minimum of 1.0 cm from the body. Use of other accessories may not ensure compliance with RF exposure. If you do not use a body-worn accessory and are not holding the device at the ear, position the handset a minimum of 1.0 cm from your body when the device is switched on.

During use, the actual SAR level is usually much lower than the maximum value. In general, the closer you are to a base station, the lower the transmission output of your device. To reduce exposure to RF energy, use a hands-free accessory or other similar option to keep this device away from your head and body.

This phone meets the FCC and IC requirements on the limitation of exposure of the general public to electromagnetic fields by way of health

protection.

The highest SAR value of this device is listed below:

	FCC (W/kg @1g)	IC (W/kg @1g)
Head	0.85	0.85
Body	1.18	1.18