Test Laboratory: Compliance Certification Services Inc.

D2450V2 SN 728

DUT: Dipole 2450 MHz; Type: D2450V2; Serial: D2450V2 - SN:728

Communication System: CW2450; Frequency: 2450 MHz;Duty Cycle: 1:1
Medium parameters used: f = 2450 MHz; σ = 1.99 mho/m; ε_r = 50.3; ρ = 1000 kg/m^3
Phantom section: Flat Section
Air Temperature:25.5 deg C;Liquid Temperature:24.5 deg C
Area Scan Find Secondary Maximum Within 2dB and with a peak SAR value greater than 0.0012W/kg

DASY4 Configuration:

- Probe: EX3DV4 - SN3554; ConvF(6.14, 6.14, 6.14);
- Sensor-Surface: 2.5mm (Mechanical Surface Detection)
- Electronics: DAE3 Sn558; Calibrated: 8/24/2004
- Phantom: SAM 34; Type: SAM V4.0; Serial: TP-1150
- Measurement SW: DASY4, V4.5 Build 19; Postprocessing SW: SEMCAD, V1.8 Build 146

Pin=250mW,d=10mm/Area Scan (6x6x1): Measurement grid: dx=15mm, dy=15mm

Maximum value of SAR (measured) = 9.76 mW/g

Pin=250mW,d=10mm/Z Scan (1x1x21): Measurement grid: dx=20mm, dy=20mm, dz=5mm

Maximum value of SAR (measured) = 22.1 mW/g

Pin=250mW,d=10mm/Zoom Scan (5x5x7)/Cube 0: Measurement grid: dx=7.5mm, dy=7.5mm, dz=5mm

Reference Value = 89.3 V/m; Power Drift = -0.054 dB
Peak SAR (extrapolated) = 31.2 W/kg
SAR(1 g) = 13.7 mW/g; SAR(10 g) = 5.98 mW/g
Maximum value of SAR (measured) = 15.5 mW/g

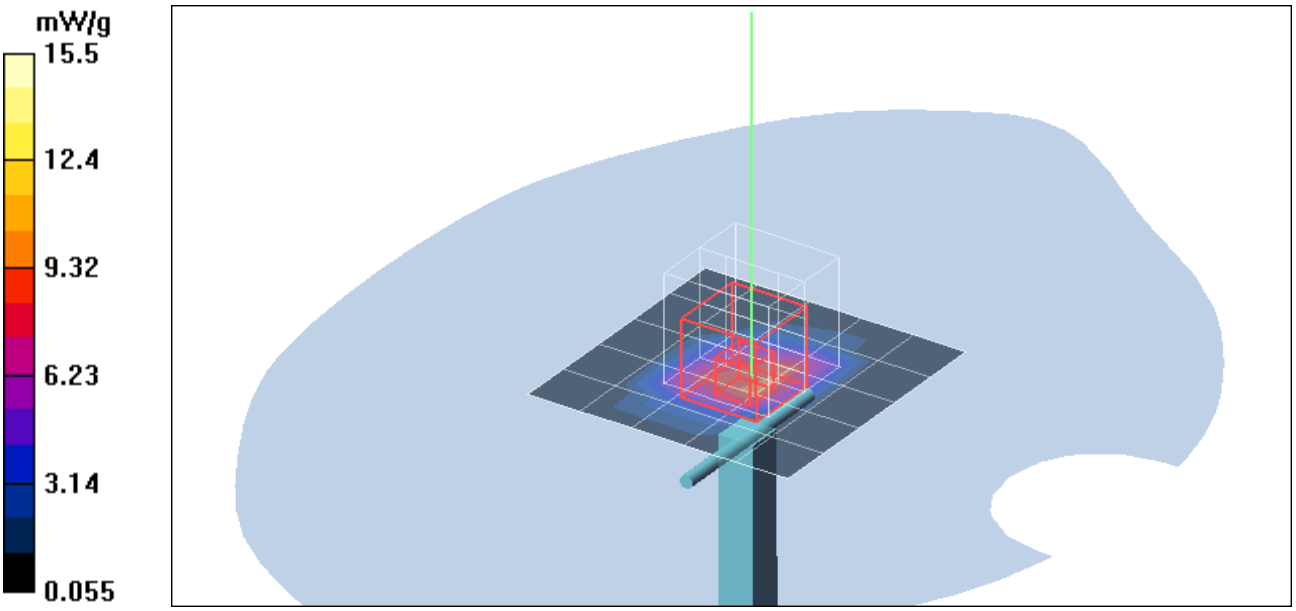
mW/g
15.5
12.4
9.32
6.23
3.14
0.055

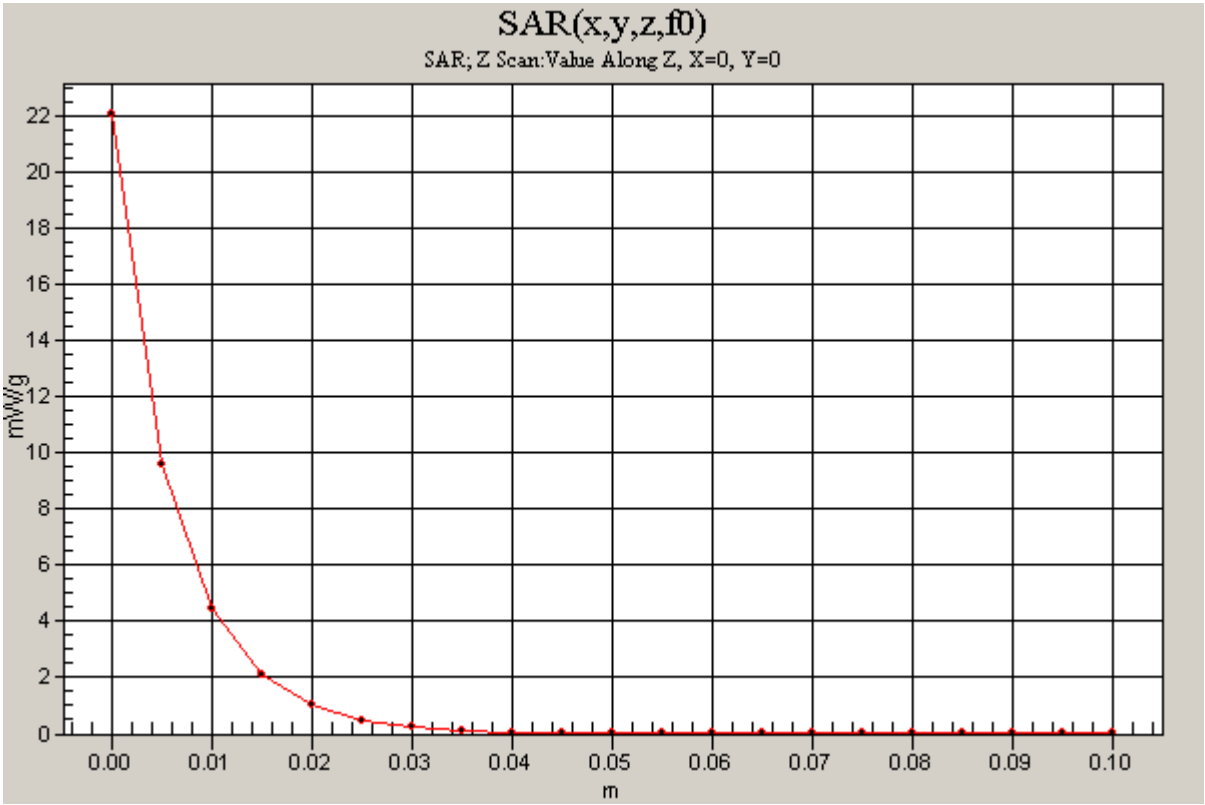
SAR(x,y,z,f0)
SAR; Z Scan:Value Along Z, X=0, Y=0
mW/g
0
2
4
6
8
10
12
14
16
18
20
22
0.00
0.01
0.02
0.03
0.04
0.05
0.06
0.07
0.08
0.09
0.10
m

Test Laboratory: Compliance Certification Services Inc.

802.11b Side Touch mode Main ant

DUT: ZE1; Type: TABLE PC; Serial: N/A

Communication System: IEEE 802.11b WLAN; Frequency: 2412 MHz;Duty Cycle: 1:1
Medium parameters used: f = 2412 MHz; σ = 1.99 mho/m; ε_r = 50.3; ρ = 1000 kg/m^3
Phantom section: Flat Section
Air Temperature:25.5 deg C;Liquid Temperature:24.5 deg C
Area Scan Find Secondary Maximum Within 2dB and with a peak SAR value greater than 0.0012W/kg

DASY4 Configuration:

- Probe: EX3DV4 - SN3554; ConvF(6.14, 6.14, 6.14);
- Sensor-Surface: 2.5mm (Mechanical Surface Detection)
- Electronics: DAE3 Sn558; Calibrated: 8/24/2004
- Phantom: SAM 34; Type: SAM V4.0; Serial: TP-1150
- Measurement SW: DASY4, V4.5 Build 19; Postprocessing SW: SEMCAD, V1.8 Build 146

Middle CH Rate=1M bit/Area Scan (7x13x1): Measurement grid: dx=15mm, dy=15mm

Maximum value of SAR (measured) = 0.378 mW/g

Middle CH Rate=1M bit/Zoom Scan (5x5x7)/Cube 0: Measurement grid: dx=7.5mm, dy=7.5mm, dz=5mm

Reference Value = 10.2 V/m; Power Drift = -0.035 dB
Peak SAR (extrapolated) = 0.962 W/kg
SAR(1 g) = 0.390 mW/g; SAR(10 g) = 0.165 mW/g
Maximum value of SAR (measured) = 0.411 mW/g

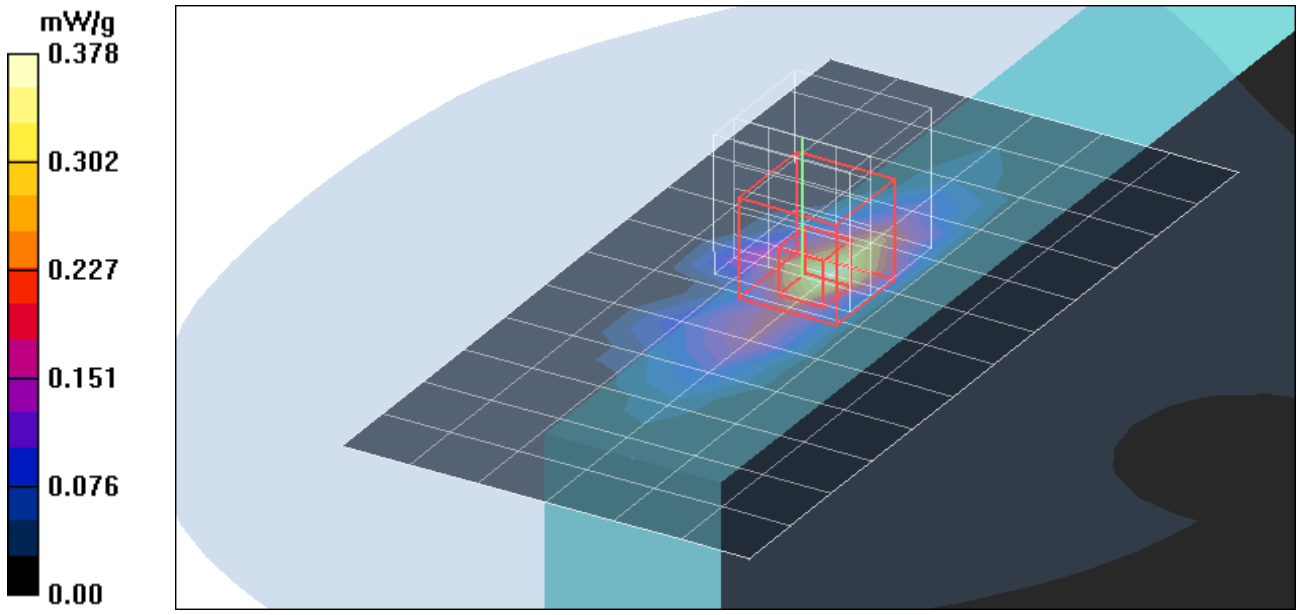

Test Laboratory: Compliance Certification Services Inc.

802.11b Side Touch mode Main ant

DUT: ZE1; Type: TABLE PC; Serial: N/A

Communication System: IEEE 802.11b WLAN; Frequency: 2412 MHz; Duty Cycle: 1:1
Medium parameters used: f = 2412 MHz; σ = 1.99 mho/m; ε_r = 50.3; ρ = 1000 kg/m^3
Phantom section: Flat Section
Air Temperature:25.5 deg C;Liquid Temperature:24.5 deg C
Area Scan Find Secondary Maximum Within 2dB and with a peak SAR value greater than 0.0012W/kg

DASY4 Configuration:

- Probe: EX3DV4 - SN3554; ConvF(6.14, 6.14, 6.14);
- Sensor-Surface: 2.5mm (Mechanical Surface Detection)
- Electronics: DAE3 Sn558; Calibrated: 8/24/2004
- Phantom: SAM 34; Type: SAM V4.0; Serial: TP-1150
- Measurement SW: DASY4, V4.5 Build 19; Postprocessing SW: SEMCAD, V1.8 Build 146

Low CH Rate=11M bit/Area Scan (7x13x1): Measurement grid: dx=15mm, dy=15mm

Maximum value of SAR (measured) = 0.363 mW/g

Low CH Rate=11M bit/Zoom Scan (5x5x7)/Cube 0: Measurement grid: dx=7.5mm, dy=7.5mm, dz=5mm

Reference Value = 9.8 V/m; Power Drift = -0.028 dB
Peak SAR (extrapolated) = 0.823 W/kg
SAR(1 g) = 0.359 mW/g; SAR(10 g) = 0.155 mW/g
Maximum value of SAR (measured) = 0.406 mW/g

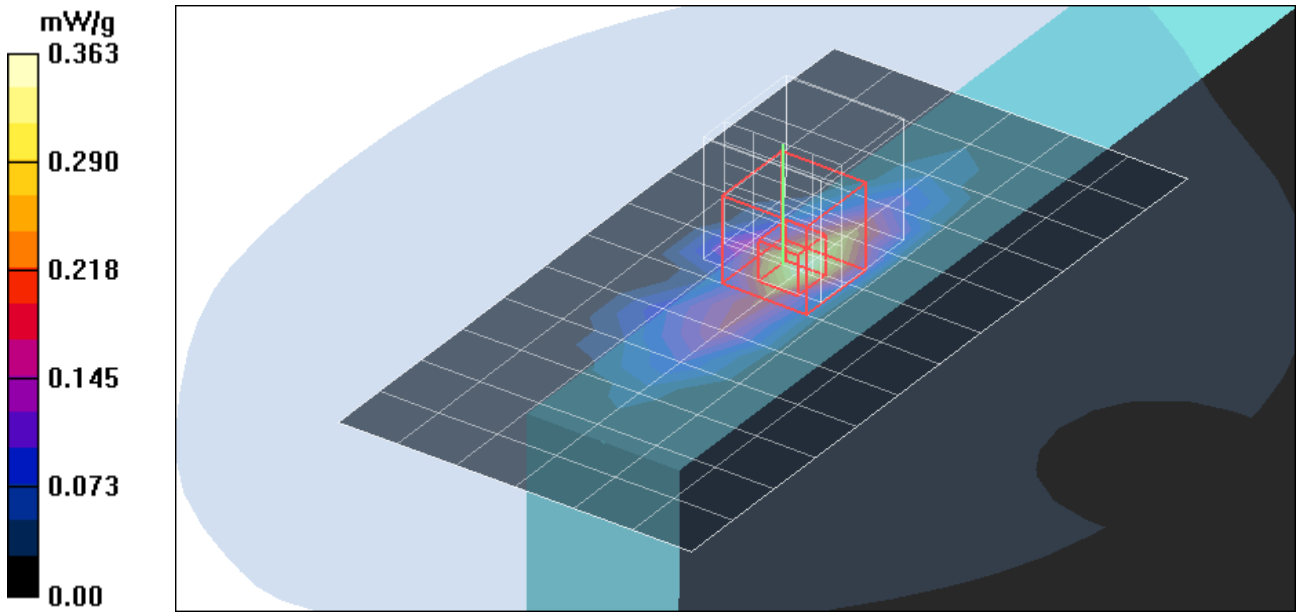

Test Laboratory: Compliance Certification Services Inc.

802.11b Side Touch mode Aux ant

DUT: ZE1; Type: TABLE PC; Serial: N/A

Communication System: IEEE 802.11b WLAN; Frequency: 2412 MHz;Duty Cycle: 1:1
Medium parameters used: f = 2412 MHz; σ = 1.99 mho/m; ε_r = 50.3; ρ = 1000 kg/m^3
Phantom section: Flat Section
Air Temperature:25.5 deg C;Liquid Temperature:24.5 deg C
Area Scan Find Secondary Maximum Within 2dB and with a peak SAR value greater than 0.0012W/kg

DASY4 Configuration:

- Probe: EX3DV4 - SN3554; ConvF(6.14, 6.14, 6.14);
- Sensor-Surface: 2.5mm (Mechanical Surface Detection)Sensor-Surface: 0mm (Fix Surface)
- Electronics: DAE3 Sn558; Calibrated: 8/24/2004
- Phantom: SAM 34; Type: SAM V4.0; Serial: TP-1150
- Measurement SW: DASY4, V4.5 Build 19; Postprocessing SW: SEMCAD, V1.8 Build 146

Low CH Rate=1M bit/Area Scan (7x11x1): Measurement grid: dx=15mm, dy=15mm

Maximum value of SAR (measured) = 0.464 mW/g

Low CH Rate=1M bit/Zoom Scan (5x5x7)/Cube 0: Measurement grid: dx=7.5mm, dy=7.5mm, dz=5mm

Reference Value = 15.0 V/m; Power Drift = -0.074 dB
Peak SAR (extrapolated) = 1.51 W/kg
SAR(1 g) = 0.556 mW/g; SAR(10 g) = 0.230 mW/g
Maximum value of SAR (measured) = 0.921 mW/g

Low CH Rate=1M bit/Z Scan (1x1x101): Measurement grid: dx=20mm, dy=20mm, dz=1mm

Maximum value of SAR (measured) = 1.88 mW/g

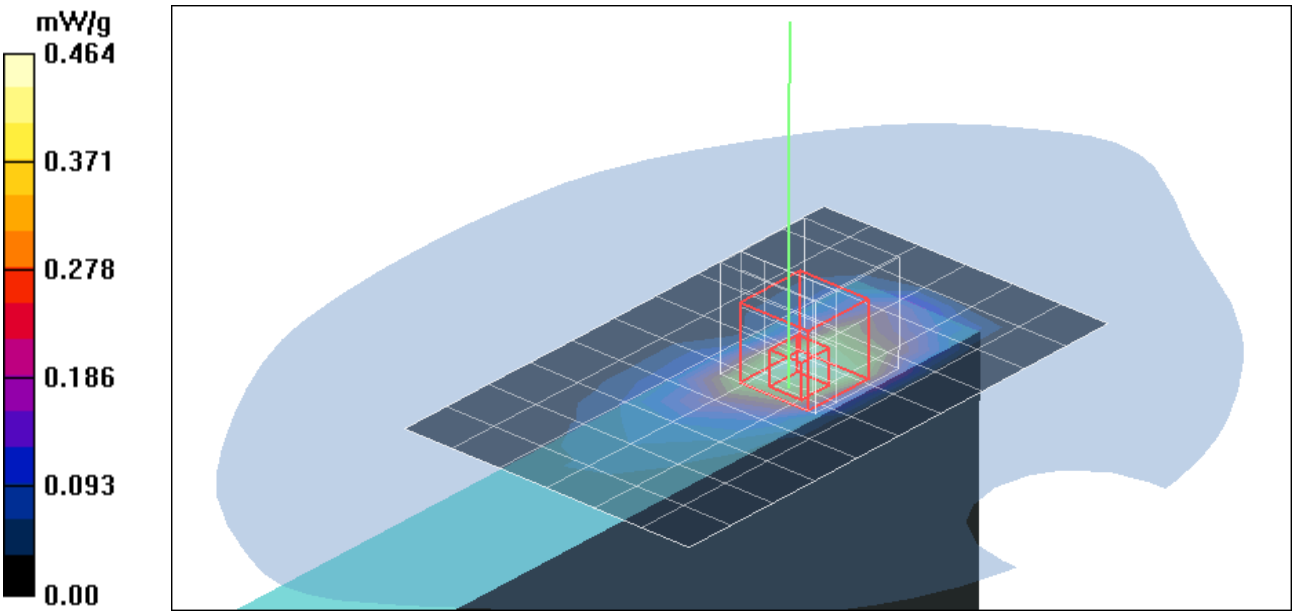
mW/g
0.464
0.371
0.278
0.186
0.093
0.00

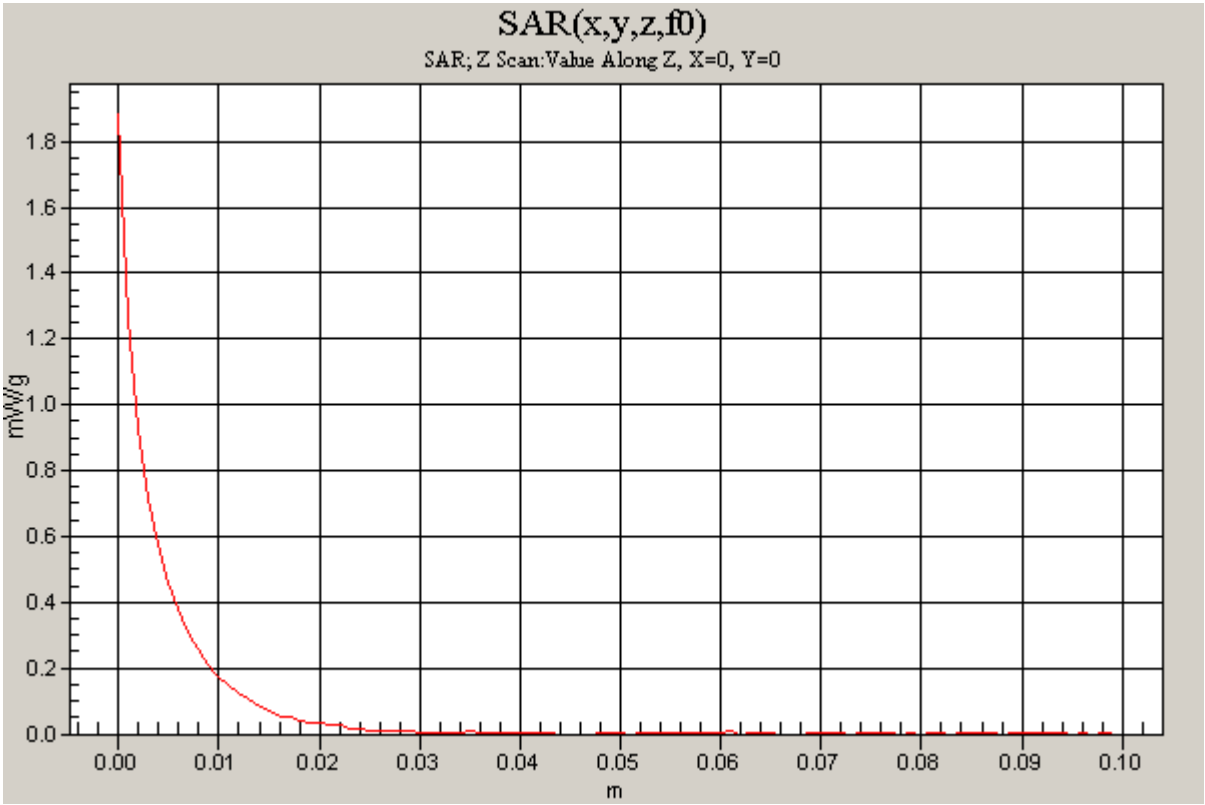
SAR(x,y,z,f0)
SAR; Z Scan:Value Along Z, X=0, Y=0
mW/g
1.8
1.6
1.4
1.2
1.0
0.8
0.6
0.4
0.2
0.0
0.00
0.01
0.02
0.03
0.04
0.05
0.06
0.07
0.08
0.09
0.10
m

Test Laboratory: Compliance Certification Services Inc.

802.11b Side Touch mode Aux ant

DUT: ZE1; Type: TABLE PC; Serial: N/A

Communication System: IEEE 802.11b WLAN; Frequency: 2412 MHz;Duty Cycle: 1:1
Medium parameters used: f = 2412 MHz; σ = 1.99 mho/m; ε_r = 50.3; ρ = 1000 kg/m^3
Phantom section: Flat Section
Air Temperature:25.5 deg C;Liquid Temperature:24.5 deg C
Area Scan Find Secondary Maximum Within 2dB and with a peak SAR value greater than 0.0012W/kg

DASY4 Configuration:

- Probe: EX3DV4 - SN3554; ConvF(6.14, 6.14, 6.14);
- Sensor-Surface: 2.5mm (Mechanical Surface Detection)
- Electronics: DAE3 Sn558; Calibrated: 8/24/2004
- Phantom: SAM 34; Type: SAM V4.0; Serial: TP-1150
- Measurement SW: DASY4, V4.5 Build 19; Postprocessing SW: SEMCAD, V1.8 Build 146

Low CH Rate=11M bit/Area Scan (9x15x1): Measurement grid: dx=15mm, dy=15mm

Maximum value of SAR (measured) = 0.432 mW/g

Low CH Rate=11M bit/Zoom Scan (5x5x7)/Cube 0: Measurement grid: dx=7.5mm, dy=7.5mm, dz=5mm

Reference Value = 12.3 V/m; Power Drift = -0.062 dB
Peak SAR (extrapolated) = 1.37 W/kg
SAR(1 g) = 0.511 mW/g; SAR(10 g) = 0.206 mW/g
Maximum value of SAR (measured) = 0.801 mW/g

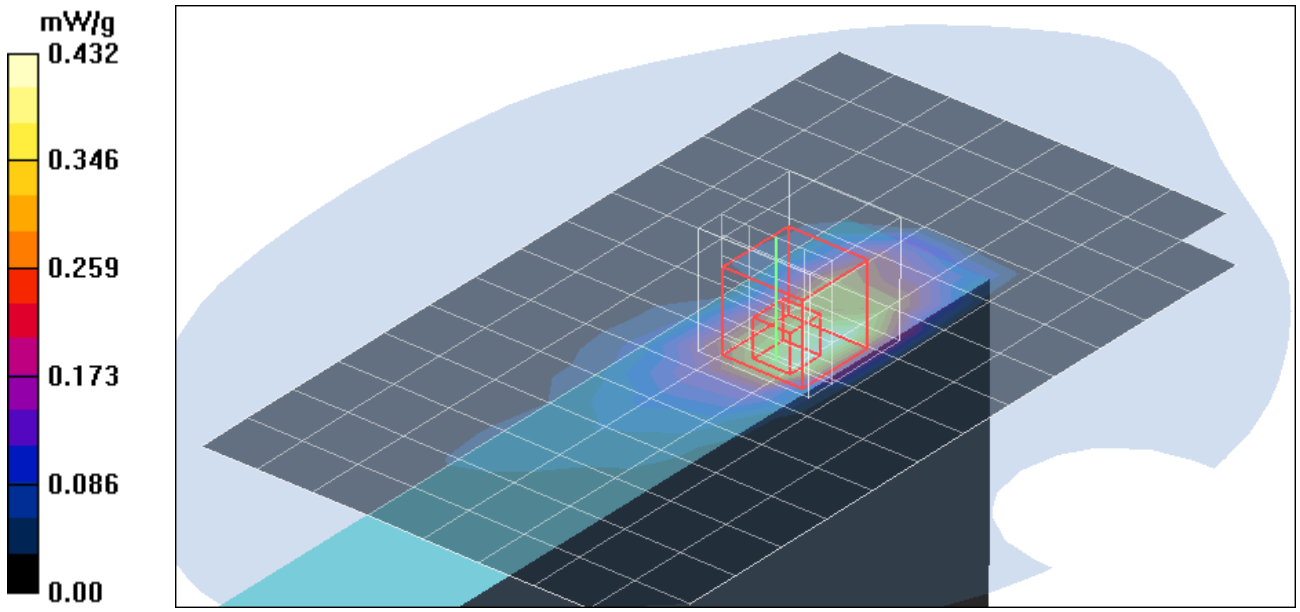

Test Laboratory: Compliance Certification Services Inc.

802.11g Side Touch mode Aux ant

DUT: ZE1; Type: TABLE PC; Serial: N/A

Communication System: IEEE 802.11g WLAN; Frequency: 2412 MHz;Duty Cycle: 1:1
Medium parameters used: f = 2412 MHz; σ = 1.99 mho/m; ε_r = 50.3; ρ = 1000 kg/m^3
Phantom section: Flat Section
Air Temperature:25.5 deg C;Liquid Temperature:24.5 deg C
Area Scan Find Secondary Maximum Within 2dB and with a peak SAR value greater than 0.0012W/kg

DASY4 Configuration:

- Probe: EX3DV4 - SN3554; ConvF(6.14, 6.14, 6.14);
- Sensor-Surface: 2.5mm (Mechanical Surface Detection)Sensor-Surface: 0mm (Fix Surface)
- Electronics: DAE3 Sn558; Calibrated: 8/24/2004
- Phantom: SAM 34; Type: SAM V4.0; Serial: TP-1150
- Measurement SW: DASY4, V4.5 Build 19; Postprocessing SW: SEMCAD, V1.8 Build 146

Low CH Rate=6M bit/Area Scan (7x11x1): Measurement grid: dx=15mm, dy=15mm

Maximum value of SAR (measured) = 0.499 mW/g

Low CH Rate=6M bit/Zoom Scan (5x5x7)/Cube 0: Measurement grid: dx=7.5mm, dy=7.5mm, dz=5mm

Reference Value = 13.0 V/m; Power Drift = -0.073 dB
Peak SAR (extrapolated) = 1.55 W/kg
SAR(1 g) = 0.565 mW/g; SAR(10 g) = 0.229 mW/g
Maximum value of SAR (measured) = 0.939 mW/g

Low CH Rate=6M bit/Z Scan (1x1x101): Measurement grid: dx=20mm, dy=20mm, dz=1mm

Maximum value of SAR (measured) = 2.10 mW/g

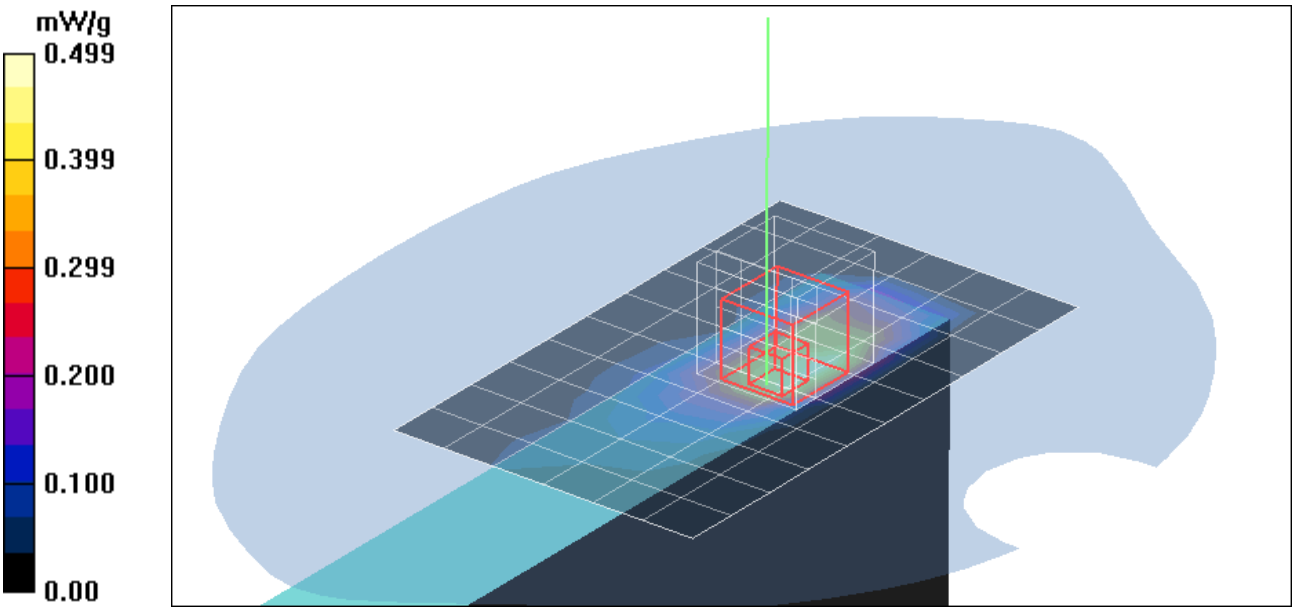
mW/g
0.499
0.399
0.299
0.200
0.100
0.00

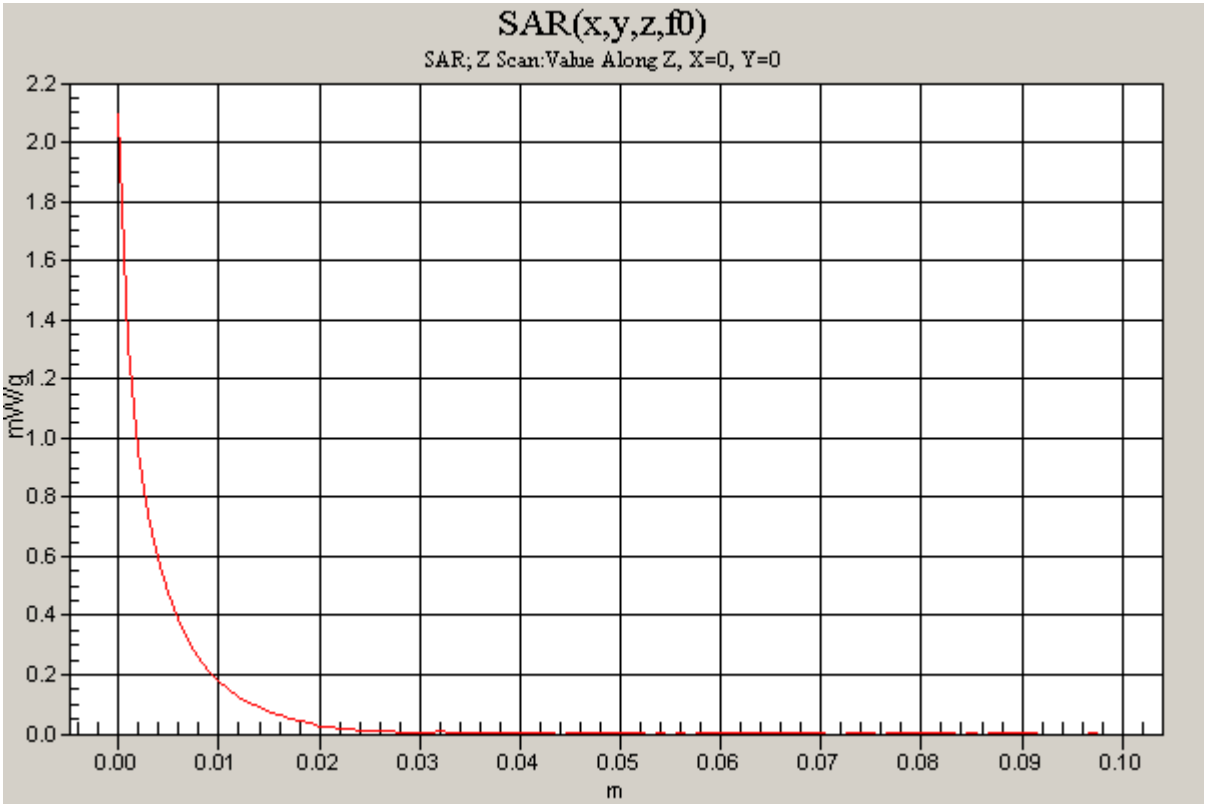
SAR(x,y,z,f0)
SAR; Z Scan:Value Along Z, X=0, Y=0
mW/g
2.2
2.0
1.8
1.6
1.4
1.2
1.0
0.8
0.6
0.4
0.2
0.0
0.00
0.01
0.02
0.03
0.04
0.05
0.06
0.07
0.08
0.09
0.10
m

Test Laboratory: Compliance Certification Services Inc.

802.11g Side Touch mode Aux ant

DUT: ZE1; Type: TABLE PC; Serial: N/A

Communication System: IEEE 802.11g WLAN; Frequency: 2412 MHz;Duty Cycle: 1:1
Medium parameters used: f = 2412 MHz; σ = 1.99 mho/m; ε_r = 50.3; ρ = 1000 kg/m^3
Phantom section: Flat Section
Air Temperature:25.5 deg C;Liquid Temperature:24.5 deg C
Area Scan Find Secondary Maximum Within 2dB and with a peak SAR value greater than 0.0012W/kg

DASY4 Configuration:

- Probe: EX3DV4 - SN3554; ConvF(6.14, 6.14, 6.14);
- Sensor-Surface: 2.5mm (Mechanical Surface Detection)
- Electronics: DAE3 Sn558; Calibrated: 8/24/2004
- Phantom: SAM 34; Type: SAM V4.0; Serial: TP-1150
- Measurement SW: DASY4, V4.5 Build 19; Postprocessing SW: SEMCAD, V1.8 Build 146

Low CH Rate=54M bit/Area Scan (7x11x1): Measurement grid: dx=15mm, dy=15mm

Maximum value of SAR (measured) = 0.330 mW/g

Low CH Rate=54M bit/Zoom Scan (5x5x7)/Cube 0: Measurement grid: dx=7.5mm, dy=7.5mm, dz=5mm

Reference Value = 10.5 V/m; Power Drift = -0.113 dB
Peak SAR (extrapolated) = 1.04 W/kg
SAR(1 g) = 0.380 mW/g; SAR(10 g) = 0.154 mW/g
Maximum value of SAR (measured) = 0.647 mW/g

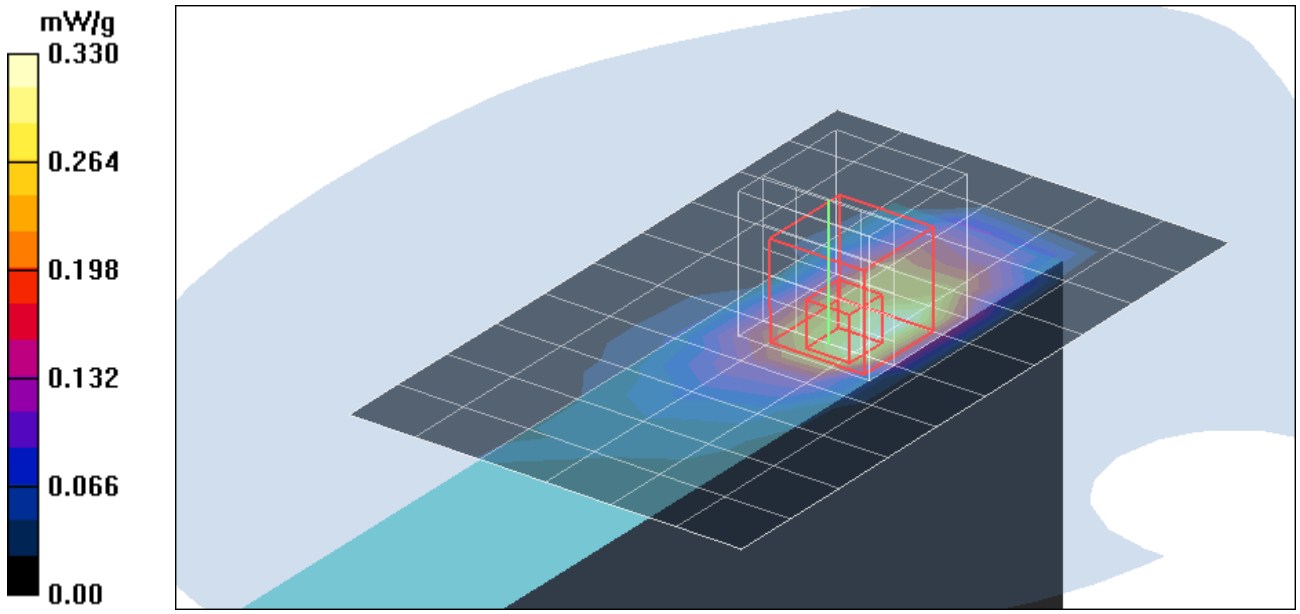

Test Laboratory: Compliance Certification Services Inc.

802.11b Parallel Touch mode Aux ant

DUT: ZE1; Type: TABLE PC; Serial: N/A

Communication System: IEEE 802.11b WLAN; Frequency: 2412 MHz;Duty Cycle: 1:1
Medium parameters used: f = 2412 MHz; σ = 1.99 mho/m; ε_r = 50.3; ρ = 1000 kg/m^3
Phantom section: Flat Section
Air Temperature:25.5 deg C;Liquid Temperature:24.5 deg C
Area Scan Find Secondary Maximum Within 2dB and with a peak SAR value greater than 0.0012W/kg

DASY4 Configuration:

- Probe: EX3DV4 - SN3554; ConvF(6.14, 6.14, 6.14);
- Sensor-Surface: 2.5mm (Mechanical Surface Detection)Sensor-Surface: 0mm (Fix Surface)
- Electronics: DAE3 Sn558; Calibrated: 8/24/2004
- Phantom: SAM 34; Type: SAM V4.0; Serial: TP-1150
- Measurement SW: DASY4, V4.5 Build 19; Postprocessing SW: SEMCAD, V1.8 Build 146

Low CH Rate=1M bit/Area Scan (11x17x1): Measurement grid: dx=15mm, dy=15mm

Maximum value of SAR (measured) = 0.041 mW/g

Low CH Rate=1M bit/Zoom Scan (5x5x7)/Cube 0: Measurement grid: dx=7.5mm, dy=7.5mm, dz=5mm

Reference Value = 3.41 V/m; Power Drift = -0.103 dB
Peak SAR (extrapolated) = 0.064 W/kg
SAR(1 g) = 0.033 mW/g; SAR(10 g) = 0.015 mW/g
Maximum value of SAR (measured) = 0.042 mW/g

Low CH Rate=1M bit/Zoom Scan (5x5x7)/Cube 1: Measurement grid: dx=7.5mm, dy=7.5mm, dz=5mm

Reference Value = 3.41 V/m; Power Drift = -0.103 dB
Peak SAR (extrapolated) = 0.110 W/kg
SAR(1 g) = 0.034 mW/g; SAR(10 g) = 0.014 mW/g
Maximum value of SAR (measured) = 0.049 mW/g

Low CH Rate=1M bit/Z Scan (1x1x101): Measurement grid: dx=20mm, dy=20mm, dz=1mm

Maximum value of SAR (measured) = 0.063 mW/g

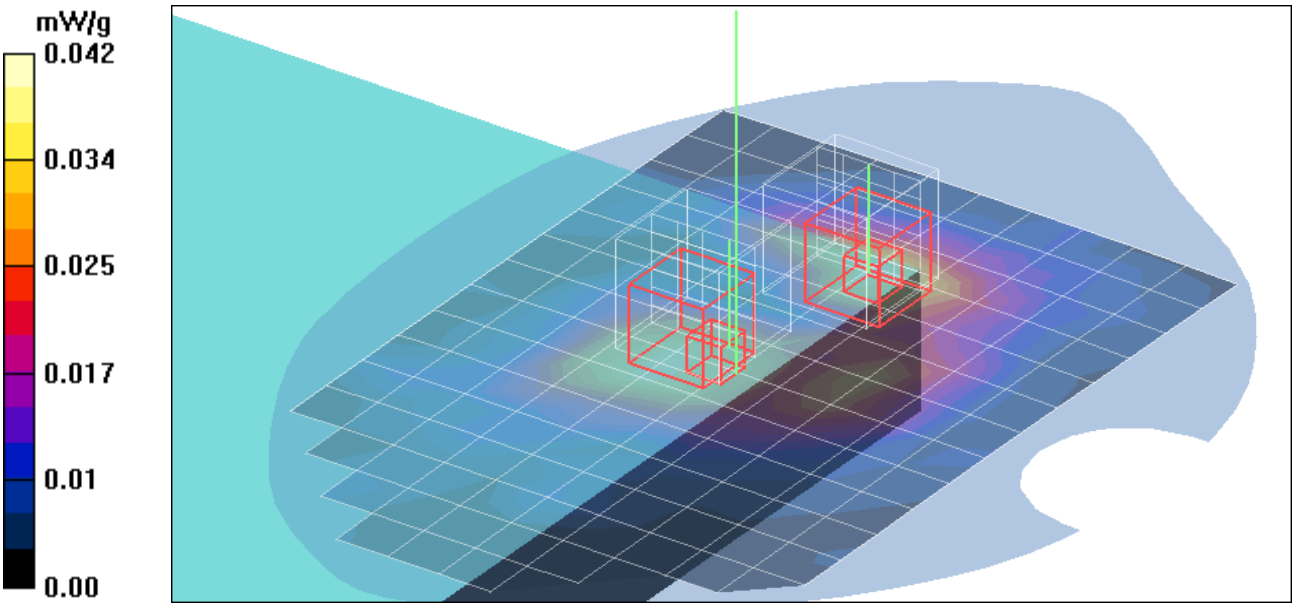
mW/g
0.042
0.034
0.025
0.017
0.01
0.00

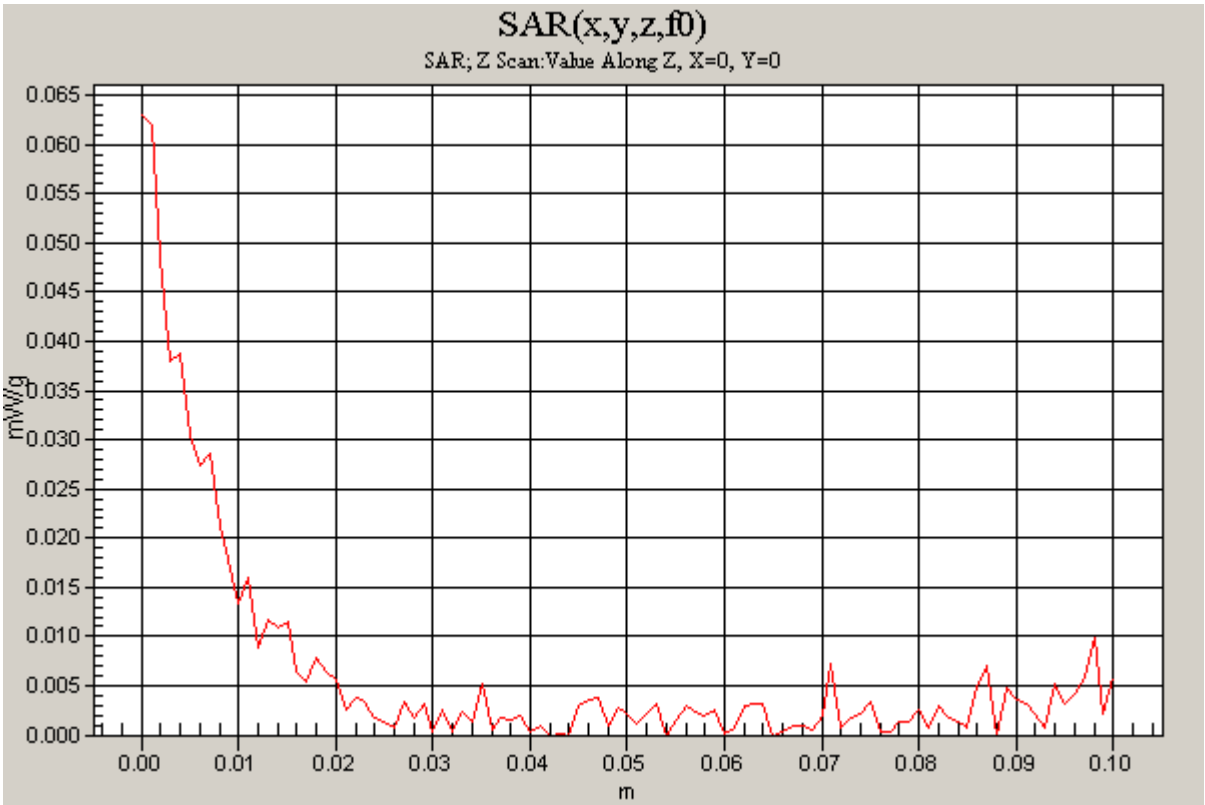
SAR(x,y,z,f0)
SAR; Z Scan:Value Along Z, X=0, Y=0
mW/g
0.065
0.060
0.055
0.050
0.045
0.040
0.035
0.030
0.025
0.020
0.015
0.010
0.005
0.000
0.00
0.01
0.02
0.03
0.04
0.05
0.06
0.07
0.08
0.09
0.10
m

Test Laboratory: Compliance Certification Services Inc.

802.11g Parallel Touch mode Aux ant

DUT: ZE1; Type: TABLE PC; Serial: N/A

Communication System: IEEE 802.11g WLAN; Frequency: 2412 MHz;Duty Cycle: 1:1
Medium parameters used: f = 2412 MHz; σ = 1.99 mho/m; ε_r = 50.3; ρ = 1000 kg/m^3
Phantom section: Flat Section
Air Temperature:25.5 deg C;Liquid Temperature:24.5 deg C
Area Scan Find Secondary Maximum Within 2dB and with a peak SAR value greater than 0.0012W/kg

DASY4 Configuration:

- Probe: EX3DV4 - SN3554; ConvF(6.14, 6.14, 6.14);
- Sensor-Surface: 2.5mm (Mechanical Surface Detection)Sensor-Surface: 0mm (Fix Surface)
- Electronics: DAE3 Sn558; Calibrated: 8/24/2004
- Phantom: SAM 34; Type: SAM V4.0; Serial: TP-1150
- Measurement SW: DASY4, V4.5 Build 19; Postprocessing SW: SEMCAD, V1.8 Build 146

Low CH Rate=6M bit/Area Scan (11x14x1): Measurement grid: dx=15mm, dy=15mm

Maximum value of SAR (measured) = 0.049 mW/g

Low CH Rate=6M bit/Zoom Scan (5x5x7)/Cube 0: Measurement grid: dx=7.5mm, dy=7.5mm, dz=5mm

Reference Value = 3.69 V/m; Power Drift = -0.051 dB
Peak SAR (extrapolated) = 0.134 W/kg
SAR(1 g) = 0.042 mW/g; SAR(10 g) = 0.018 mW/g
Maximum value of SAR (measured) = 0.051 mW/g

Low CH Rate=6M bit/Zoom Scan (5x5x7)/Cube 1: Measurement grid: dx=7.5mm, dy=7.5mm, dz=5mm

Reference Value = 3.69 V/m; Power Drift = -0.051 dB
Peak SAR (extrapolated) = 0.067 W/kg
SAR(1 g) = 0.032 mW/g; SAR(10 g) = 0.013 mW/g
Maximum value of SAR (measured) = 0.046 mW/g

Low CH Rate=6M bit/Z Scan (1x1x101): Measurement grid: dx=20mm, dy=20mm, dz=1mm

Maximum value of SAR (measured) = 0.074 mW/g

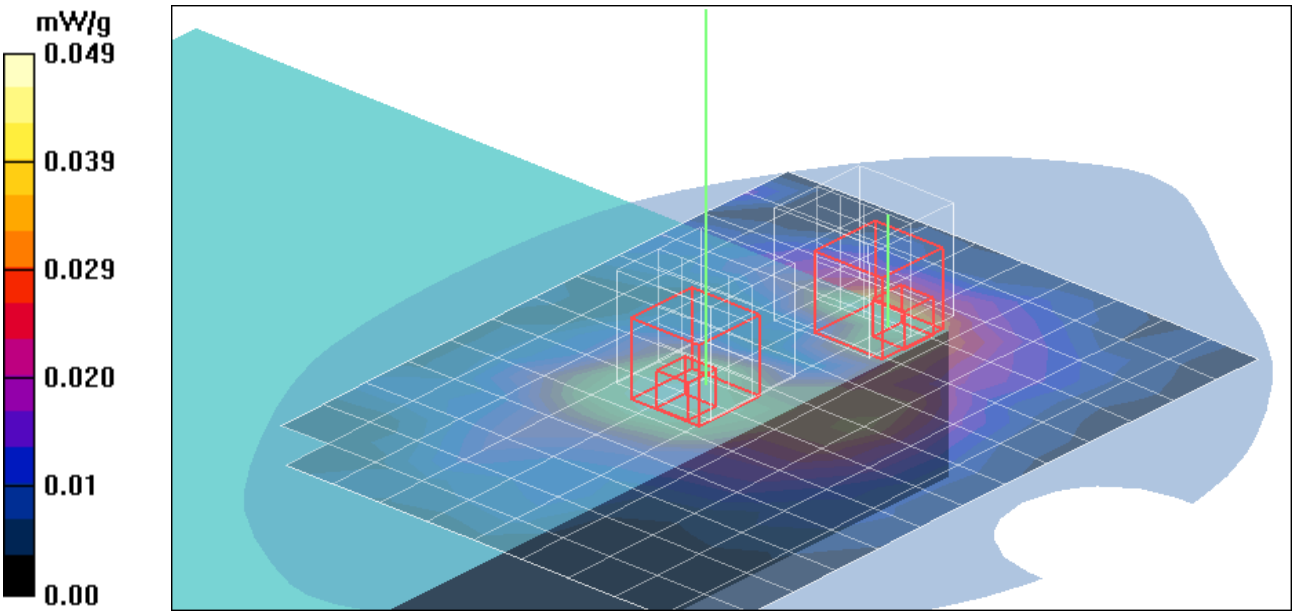
mW/g
0.049
0.039
0.029
0.020
0.01
0.00

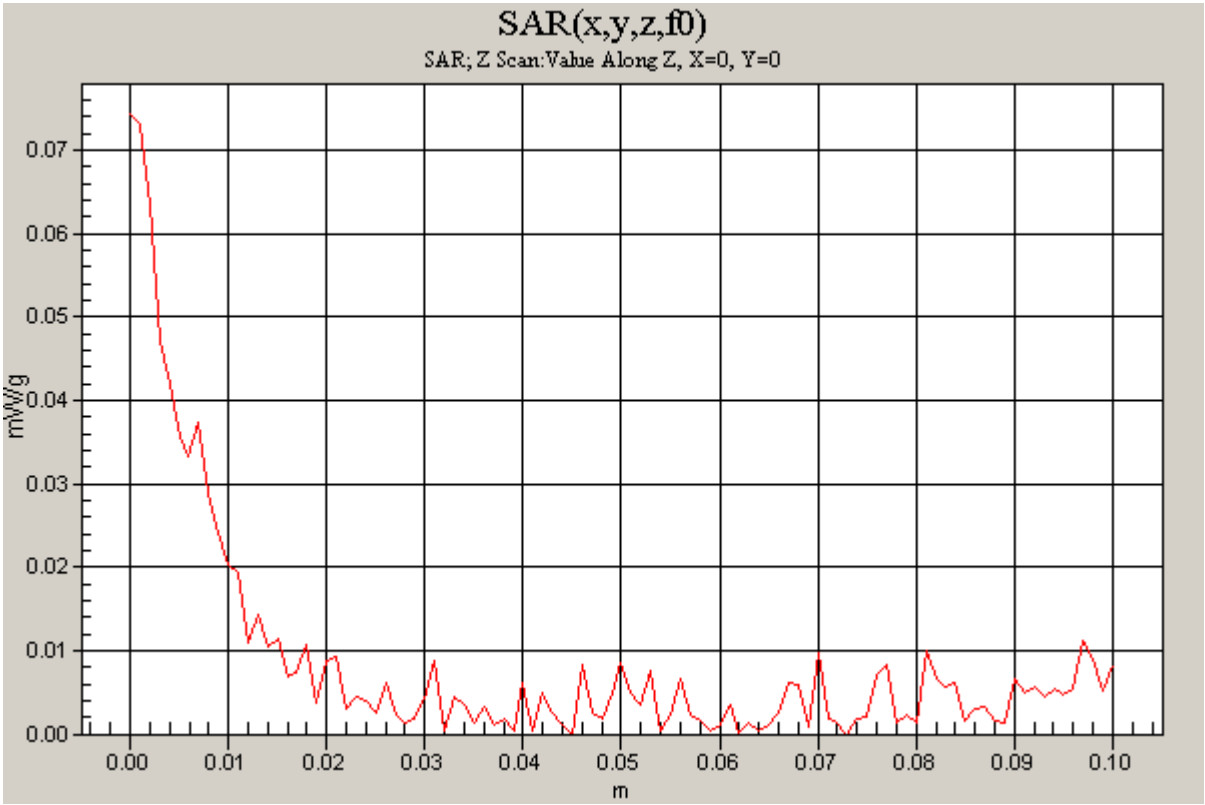
SAR(x,y,z,f0)
SAR; Z Scan:Value Along Z, X=0, Y=0
mW/g
0.07
0.06
0.05
0.04
0.03
0.02
0.01
0.00
0.00
0.01
0.02
0.03
0.04
0.05
0.06
0.07
0.08
0.09
0.10
m

Test Laboratory: Compliance Certification Services Inc.

802.11b Right Side Touch mode Aux ant

DUT: ZE1; Type: TABLE PC; Serial: N/A

Communication System: IEEE 802.11b WLAN; Frequency: 2412 MHz;Duty Cycle: 1:1
Medium parameters used: f = 2412 MHz; σ = 1.99 mho/m; ε_r = 50.3; ρ = 1000 kg/m^3
Phantom section: Flat Section
Air Temperature:25.5 deg C;Liquid Temperature:24.5 deg C
Area Scan Find Secondary Maximum Within 2dB and with a peak SAR value greater than 0.0012W/kg

DASY4 Configuration:

- Probe: EX3DV4 - SN3554; ConvF(6.14, 6.14, 6.14);
- Sensor-Surface: 2.5mm (Mechanical Surface Detection)
- Electronics: DAE3 Sn558; Calibrated: 8/24/2004
- Phantom: SAM 34; Type: SAM V4.0; Serial: TP-1150
- Measurement SW: DASY4, V4.5 Build 19; Postprocessing SW: SEMCAD, V1.8 Build 146

Low CH Rate=1M bit/Area Scan (10x15x1): Measurement grid: dx=15mm, dy=15mm

Maximum value of SAR (measured) = 0.200 mW/g

Low CH Rate=1M bit/Zoom Scan (5x5x7)/Cube 0: Measurement grid: dx=7.5mm, dy=7.5mm, dz=5mm

Reference Value = 8.75 V/m; Power Drift = -0.096 dB
Peak SAR (extrapolated) = 0.424 W/kg
SAR(1 g) = 0.145 mW/g; SAR(10 g) = 0.074 mW/g
Maximum value of SAR (measured) = 0.235 mW/g

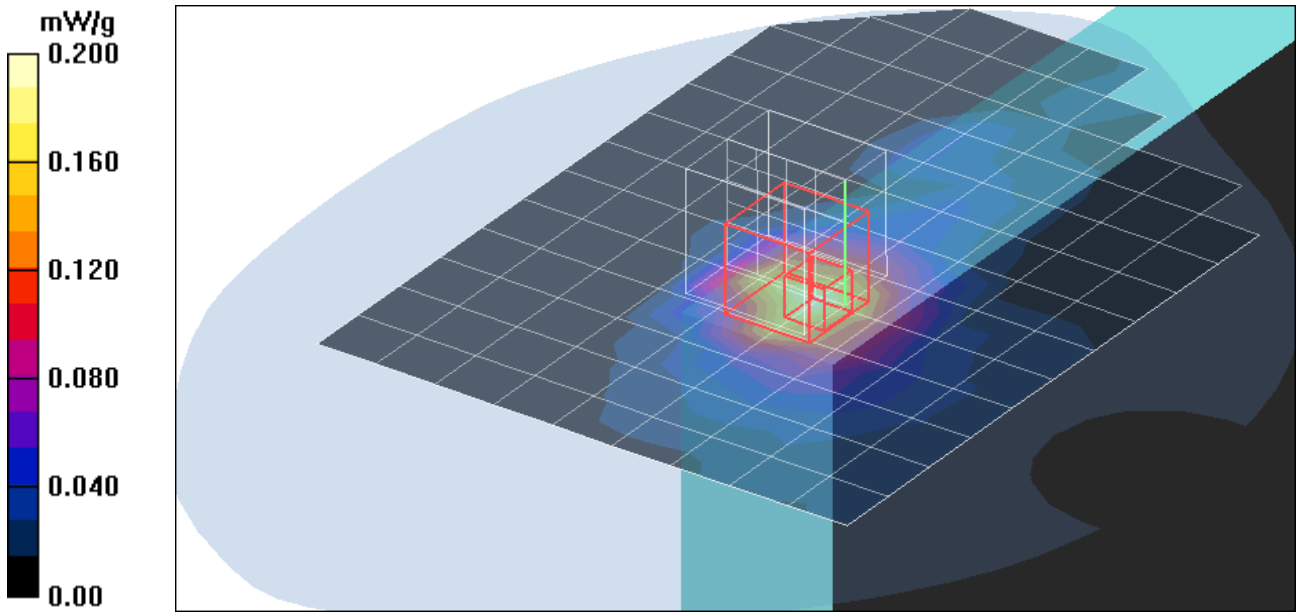

Test Laboratory: Compliance Certification Services Inc.

802.11g Right Side Touch mode Aux ant

DUT: ZE1; Type: TABLE PC; Serial: N/A

Communication System: IEEE 802.11g WLAN; Frequency: 2412 MHz;Duty Cycle: 1:1
Medium parameters used: f = 2412 MHz; σ = 1.99 mho/m; ε_r = 50.3; ρ = 1000 kg/m^3
Phantom section: Flat Section
Air Temperature:25.5 deg C;Liquid Temperature:24.5 deg C
Area Scan Find Secondary Maximum Within 2dB and with a peak SAR value greater than 0.0012W/kg

DASY4 Configuration:

- Probe: EX3DV4 - SN3554; ConvF(6.14, 6.14, 6.14);
- Sensor-Surface: 2.5mm (Mechanical Surface Detection)Sensor-Surface: 0mm (Fix Surface)
- Electronics: DAE3 Sn558; Calibrated: 8/24/2004
- Phantom: SAM 34; Type: SAM V4.0; Serial: TP-1150
- Measurement SW: DASY4, V4.5 Build 19; Postprocessing SW: SEMCAD, V1.8 Build 146

Low CH Rate=6M bit/Area Scan (9x13x1): Measurement grid: dx=15mm, dy=15mm

Maximum value of SAR (measured) = 0.189 mW/g

Low CH Rate=6M bit/Zoom Scan (5x5x7)/Cube 0: Measurement grid: dx=7.5mm, dy=7.5mm, dz=5mm

Reference Value = 8.30 V/m; Power Drift = -0.00 dB
Peak SAR (extrapolated) = 0.442 W/kg
SAR(1 g) = 0.168 mW/g; SAR(10 g) = 0.080 mW/g
Maximum value of SAR (measured) = 0.262 mW/g

Low CH Rate=6M bit/Z Scan (1x1x101): Measurement grid: dx=20mm, dy=20mm, dz=1mm

Maximum value of SAR (measured) = 0.590 mW/g

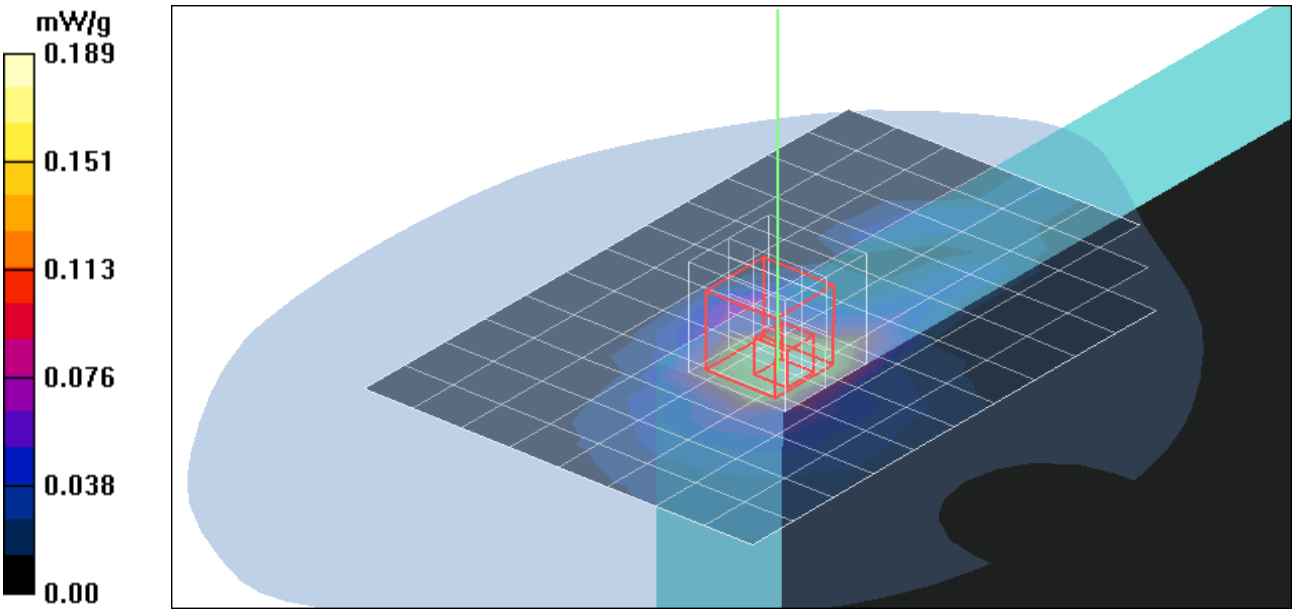
mW/g
0.189
0.151
0.113
0.076
0.038
0.00

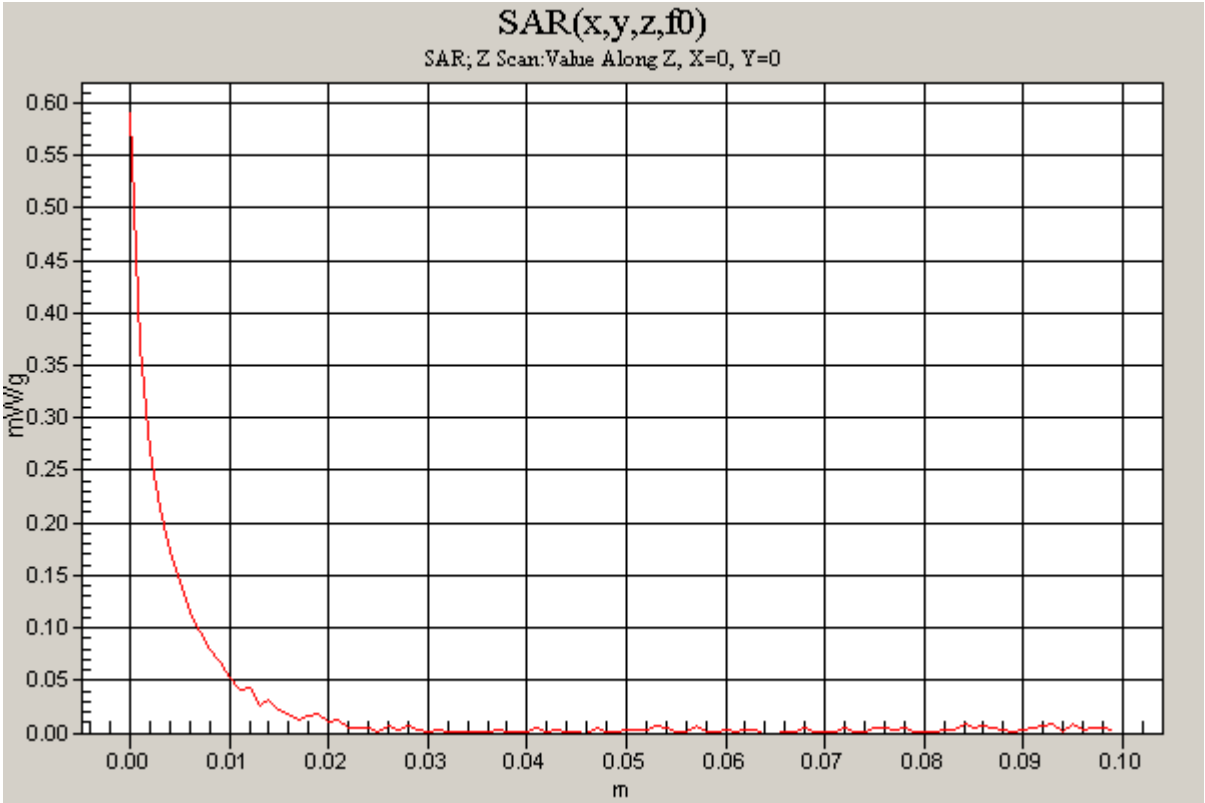
SAR(x,y,z,f0)
SAR; Z Scan:Value Along Z, X=0, Y=0
mW/g
0.60
0.55
0.50
0.45
0.40
0.35
0.30
0.25
0.20
0.15
0.10
0.05
0.00
0.00
0.01
0.02
0.03
0.04
0.05
0.06
0.07
0.08
0.09
0.10
m

Test Laboratory: Compliance Certification Services Inc.

802.11b Left Side Touch mode Main ant

DUT: ZE1; Type: TABLE PC; Serial: N/A

Communication System: IEEE 802.11b WLAN; Frequency: 2412 MHz;Duty Cycle: 1:1
Medium parameters used: f = 2412 MHz; σ = 1.99 mho/m; ε_r = 50.3; ρ = 1000 kg/m^3
Phantom section: Flat Section
Air Temperature:25.5 deg C;Liquid Temperature:24.5 deg C
Area Scan Find Secondary Maximum Within 2dB and with a peak SAR value greater than 0.0012W/kg

DASY4 Configuration:

- Probe: EX3DV4 - SN3554; ConvF(6.14, 6.14, 6.14);
- Sensor-Surface: 2.5mm (Mechanical Surface Detection)
- Electronics: DAE3 Sn558; Calibrated: 8/24/2004
- Phantom: SAM 34; Type: SAM V4.0; Serial: TP-1150
- Measurement SW: DASY4, V4.5 Build 19; Postprocessing SW: SEMCAD, V1.8 Build 146

Low CH Rate=1M bit/Area Scan (7x15x1): Measurement grid: dx=15mm, dy=15mm

Maximum value of SAR (measured) = 0.00 mW/g

Low CH Rate=1M bit/Zoom Scan (5x5x7)/Cube 0: Measurement grid: dx=7.5mm, dy=7.5mm, dz=5mm

Reference Value = 0.00 V/m; Power Drift = -0.026dB
Peak SAR (extrapolated) = 0.01 W/kg
SAR(1 g) = 0.00025 mW/g; SAR(10 g) = 2.58e-005 mW/g
Maximum value of SAR (measured) = 0.01 mW/g

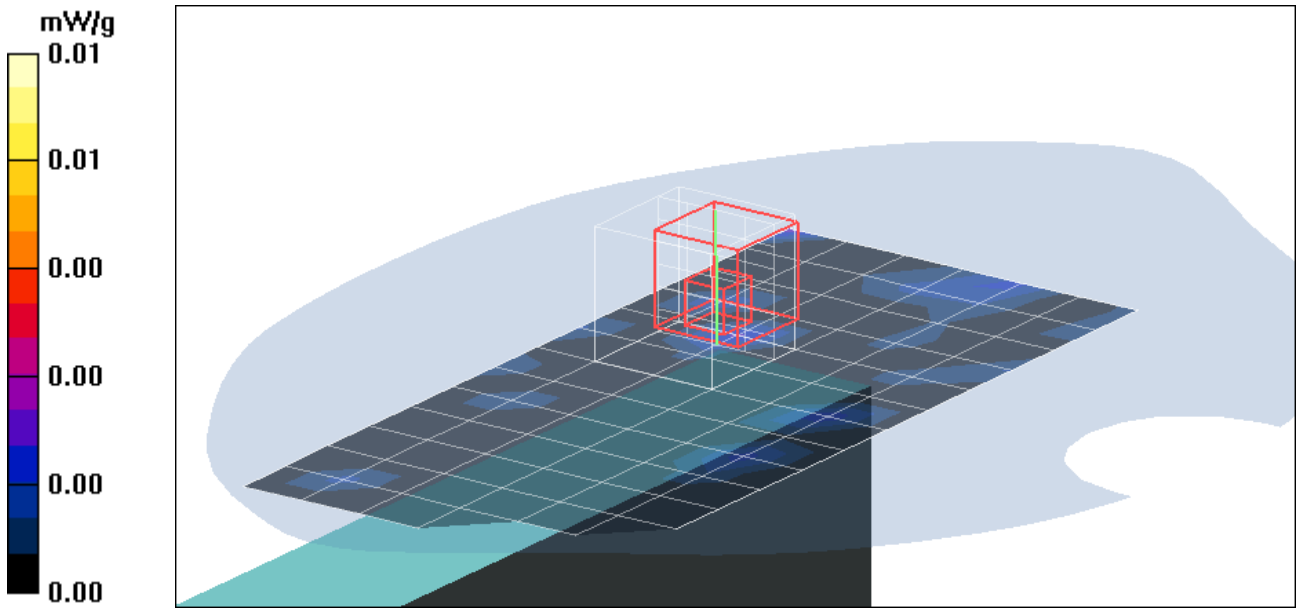

Test Laboratory: Compliance Certification Services Inc.

802.11g Left Side Touch mode Main ant

DUT: ZE1; Type: TABLE PC; Serial: N/A

Communication System: IEEE 802.11g WLAN; Frequency: 2412 MHz;Duty Cycle: 1:1
Medium parameters used: f = 2412 MHz; σ = 1.99 mho/m; ε_r = 50.3; ρ = 1000 kg/m^3
Phantom section: Flat Section
Air Temperature:25.5 deg C;Liquid Temperature:24.5 deg C
Area Scan Find Secondary Maximum Within 2dB and with a peak SAR value greater than 0.0012W/kg

DASY4 Configuration:

- Probe: EX3DV4 - SN3554; ConvF(6.14, 6.14, 6.14);
- Sensor-Surface: 2.5mm (Mechanical Surface Detection)
- Electronics: DAE3 Sn558; Calibrated: 8/24/2004
- Phantom: SAM 34; Type: SAM V4.0; Serial: TP-1150
- Measurement SW: DASY4, V4.5 Build 19; Postprocessing SW: SEMCAD, V1.8 Build 146

Low CH Rate=6M bit/Area Scan (7x15x1): Measurement grid: dx=15mm, dy=15mm

Maximum value of SAR (measured) = 0.00 mW/g

Low CH Rate=6M bit/Zoom Scan (5x5x7)/Cube 0: Measurement grid: dx=7.5mm, dy=7.5mm, dz=5mm
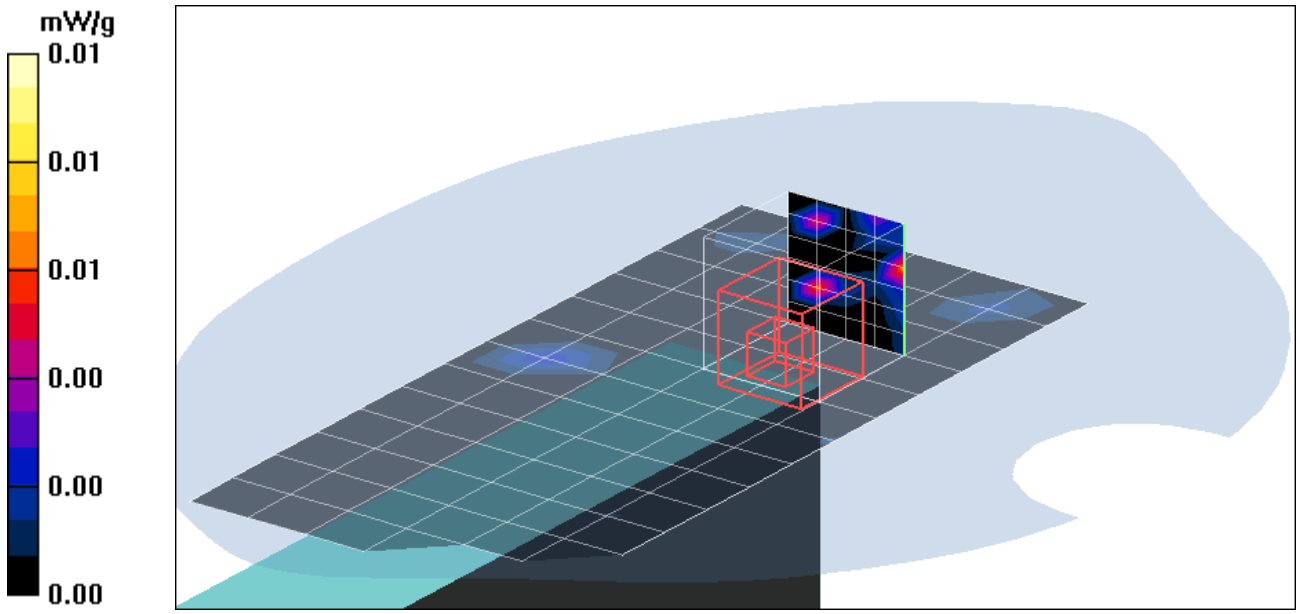
Reference Value = 0.00 V/m; Power Drift = -0.00 dB
Peak SAR (extrapolated) = 0.00 W/kg
SAR(1 g) = 0.0000212 mW/g; SAR(10 g) = 2.23e-006 mW/g
Maximum value of SAR (measured) = 0.01 mW/g