Ameritron Engineering
371 Dean Rd. Barnesville, GA 30204
Ph 770-358-3335
Cell 770-596-3514
Email W8JI@W8JI.com

Exhibit VIII Manual ALS-606
HO82WUALS606

Ameritron ALS-606

600-Watt 160-6 Meter

T-MOSFET AMPLIFIER

The Ameritron ALS-606 is 600-watt nominal output, 160- through 6-meter amateur radio band, solid-state amplifier. The ALS-606 uses four 50-volt linear RF MOSFETS. These MOSFET's are specifically designed for linear power amplifier applications, rather than non-linear or pulse service. They provide lower SSB distortion when compared to non-linear application solid-state devices in SSB service. Fan speed is regulated by temperature sensors; assuring conservative cooling with minimal noise.

Nominal driving power is 75-watts for 600-watts output (approximately 9 dB gain) on most bands. The compact 9-1/2" wide by 7" high amplifier package (depth only 14") fits nearly any station configuration. This attractive desktop amplifier unit weighs approximately 14 pounds.

An external 50-volt 25-ampere CCS power supply powers the ALS-606. Two different supplies are available, the ALS-600SPS switching regulated supply and the ALS-600PS unregulated supply. These supplies operate on all standard residential powerline voltages.

Quick Start

Thank you for purchasing this amplifier system.

The ALS606 is a compact 600-watt nominal PEP output amplifier. It uses an external power supply system. This amplifier covers 160-6 meters. Nominal drive power is 75-watts or less. NOTE: **This amplifier excludes all operation between 25 and 28 MHz.**

The ALS606 interfaces with most modern amateur radio transceivers. Supported band data input includes ICOM compatible analog voltage, Elecraft and Yaesu BCD band data, and Kenwood serial data. With proper interface cables and data, this amplifier will automatically change bands in step with transceiver band changes. Automatic band selection using a band data port or band decoded bus requires purchasing an Ameritron interface cable for your radio.

Carefully unpack this amplifier and power supply. Please inspect everything for physical shipping damage; this includes cabinets and chassis. Ameritron does ***not*** package dented or damaged units. Cabinets and controls can be broken, bent, or dented with rough handling. If a new unit arrives mechanically damaged, including broken knobs or switches, it is *always* from handling somewhere between Ameritron and the end user. In the event of cabinet damage or broken controls, please contact the dealer immediately. To permit claim processing, retain all boxes and packing materials.

Installation and Operation

WARNING: Do not block ventilation holes. Do not expose to moisture, water, or external heat.

This power amplifier system consists of two units, a power supply and an amplifier section. The amplifier section has metering and operator functional controls. Locate the amplifier section at a convenient place with proper space for airflow, within the operator's reach and view. The power supply can be placed anywhere within cable length limits. Do not extend the amplifier power supply dc power cable.

Power Line or Mains Connections

There are two distinctly different power supplies available for the ALS-606. The ALS-600PS is more basic unregulated choke input supply. The ALS-600SPS is a state-of-the-art regulated switching mode supply. Please read the appropriate sections below. For non-export use, each supply comes with a standard NEMA 5-15P two-blade 120V 15A plug with round safety-ground pin.

Overall amplifier operation remains similar with either supply; except the linear supply has a RTTY and Normal voltage switch. The RTTY position allows higher amplifier efficiency at reduced power. See the power supply details included with the particular power supply for details specific to each supply. This includes operation on various line voltages, power supply operation, fuse selection, location, and power supply trouble shooting.

Non-export versions of Ameritron ALS-600 series power supplies are wired and fused for 120Vac USA power mains, but all are modifiable to other standard power mains voltages.

ALS-600SPS

1.) The USA standard version ALS-600SPS is supplied wired for 95-135 Vac, 50-400 Hz, 15-ampere or larger electrical service. Reconfiguring internal jumpers on the power supply board will allow 185-260 volt operation.

2.) The ALS-600SPS is internally regulated. Beyond 120 or 240V concerns, the ALS-600SPS does not require voltage tap changes. There should be very little change in HV1 (PA voltage) with amplifier power and line voltage. Less than 3 volts change from the 50Vdc nominal voltage is acceptable

3.) Do not operate with line voltage below 95 or above 135 volts (185-260 volts when wired for “240 volts”).

4.) Unless power mains fall below 100 volts, the ALS600SPS switching supply provides the same performance on 120-volts as on 240-volts. The only function reasons for 240-volt power mains are light dimming and unintentional line breaker opening. If outlet wiring is already loaded heavily, or if house wiring is sized too small for the distance to the mains supply, you may have to use a dedicated 120-V amplifier line, or rewire the supply and use 240-volt mains

5.) With 120Vac mains at 600-watt nominal RF output, current draw is approximately 12 amperes on steady carrier. Peak line current is typically much less than 8 amperes at 600 watts PEP on SSB voice

6.) The ALS-600SPS can be located anywhere, within reach of interfacing cables, convenient to your operating setup. The location must be dry, airflow must not be restricted, and outside temperature must not be over 120F (49C). You must not extend or shorten the amplifier to power supply cable

7.) Exceeding safe power supply load current forces the switch mode supply into shutdown. Restore operation by turning the main power switch off for a brief time. If the power supply detects a permanent overload or the supply has failed, the supply will not reset

ALS-600PS

The ALS600PS uses a standard transformer with choke input filter system. It weighs significantly more than the ALS-600SPS, and is not voltage regulated.

1.) The ALS600PS requires a 100-130 Vac, 50-60 Hz, 15-ampere or larger mains supply. This supply is reconfigurable for 210-250 volts by moving internal jumpers. The line cord uses a standard USA NEMA 5-15P two-wire male plug with safety ground

2.) This supply is unregulated. Voltage range includes all typical residential power line voltages, but the internal buck-boost winding must be reconfigured if output voltage is more than 58 volts no load. Operation with no load voltages over 58 volts can compromise FET reliability

3.) With 120Vac mains, current draw with steady 600-watt carrier is typically around 12 amperes. Line current is typically less than 8 amperes at 600 watts PEP SSB voice.

4.) The ALS600PS normally provides the same performance at 120-volts as at 240-volts, unless the power mains have excessive voltage drop. If you experience light dimming or line breaker opening, move the supply to a dedicated 120-V line, or reconfigure the supply for, and use, 240-volts

5.) This supply does not have overload protection, other than standard fuses

Radio and Antenna Connections

WARNING: Forcing connector engagement can result in permanent connector damage. Solder on the outside of center pins or bent pins are primary causes of female connector damage. External solder or bent center pins can permanently damage the female.

Do ***not*** use Line Isolators on amplifier RF cables. The chassis of the amplifier should be at the same RF potential as all other desk equipment. Shield isolators allow equipment to float to different RF chassis potentials. Different chassis potentials are exactly what we do **not** want, and isolators on desk coaxial cables encourage differing enclosure RF voltages. It is better to cure RF problems outside the operating position.

1.) RF connections are through standard UHF female connectors. Use 50-ohm coaxial cables with quality, properly soldered, UHF male (PL259) connectors. The output cable must safely handle at least 600 watts

2.) Examine the RF connectors. Female SO-239 UHF connectors have notches on the outer threaded-area edge. PL259 UHF males have protruding tabs on the metal outside the center-pin insulator. These tabs and notches prevent unwanted connector rotation. The male tab or tabs must align and fit into female notches. This interlocking prevents connector rotation. It is best achieved by slightly wiggling or rotating the cable while ***hand***-tightening the male's shell to seat the male tab in the female notch.

3.) With a firm handgrip, while making sure the PL259 male connector tab interlocks with the amplifier's SO239 chassis connector notch, gradually tighten RF connectors. Do not use excessive force on connectors. Check for proper tightness and seating by wiggling and flexing the cable and watching for any male connector movement on the female. Properly seated, connectors will be solidly locked without use of pliers or tools

4.) ALC and Relay (keying or TR line) connectors are standard phono females. Phono males from external cables should push directly in with a snug, but not overly tight, fit

5.) The Relay line operates with low voltage (<12V) and low current (<20 mA). Transmit is enabled by pulling the Relay line to ground with a relay contact or transistor. Read your radio manual. Unless you have a very unusual radio, your radio should directly key this amplifier. Avoid using external interfaces with relays. Amplifier relay switching time is approximately 10-12 mS

6.) The remote and radio band data connectors are specialized connections. They are for use with Ameritron supplied cables ***only***

Operation

Before attempting operation:

1.) This amplifier is optimized for 50-ohm loads. Be sure your antenna system 50-ohm SWR is as low as possible. As SWR increases from 1:1, either heat or distortion will increase

2.) Be sure your antenna system, including any switches, baluns, matching circuits, or lighting protection devices, are in good condition and will safely handle high power

3.) Connectors, cables, and antennas must not have loose connections or insulation failure issues

4.) Your exciter must be adjustable to significantly less than 100-watts output. Start at 50 watts maximum drive power and increase or decrease drive to reach desired power. Do not exceed 25 amperes or 600 watts, and do not drive into non-linearity on SSB. A trapezoid scope pattern is recommended for drive adjustment. Overdriving results in an excessively wide signal, and overdriving can damage the amplifier

5.) Power mains should be reasonably stable and match power supply voltage wiring

6.) The low pass filters cut off just above the traditional primary amateur bands. A primary band's filter is used on the next lower WARC band. For example, the 20-meter low pass filter is used on 30 meters. Some radios do not supply enough band data to know the exact band. With these radios, amplifier band data displays the ***next higher*** primary band above the radio's WARC band. If you are using such a radio, do not be alarmed if 15 meters illuminates when the radio is on 17 meters. This is still the correct filter

7.) The amplifier will automatically attempt to reduce power if it appears thermal limits will be reached

8.) The amplifier will shut off with an incorrect band selection, high antenna SWR (even for an instant), if safe thermal limits are reached, or with catastrophic failures.

9.) The ALS-606 reads peak envelope power on forward and reflected RF power scales

Alerts

This amplifier has front panel alert codes using the SWR, PA, TX, warning LED's and bandswitch band indicators. When a fault code appears, the amplifier is disabled. When an operating problem is corrected, operation is restored and alerts canceled by moving the front panel Standby/Operate switch to **Standby**. The following table applies to faults:

Warning light Steady	Warning light Flash	Fault	Cause or Cure
SWR	TX	Antenna Reflected Power	High antenna SWR or intermittent antenna or feedline connection
SWR, PA	Band	Wrong filter Filter input SWR	Exciter or amplifier on incompatible band, filter failure
	PA, TX	PA FET too hot	Excessive power for duty cycle or SWR, lack of proper airflow
	10M, PA, TX	Illegal 11 meter	Excessive 27 MHz signal level
	REM, PA	No data or bad band data when on remote	Defective or improper remote cable, or bad radio band data information

With proper station installation, and with low antenna SWR, amplifier operation is straightforward:

1.) Set the bandswitch to the desired band. This happens automatically in the REM position with a suitable radio interface cable. Set ALC full clockwise. Turn the amplifier power switch ON, but leave the amplifier in STANDBY

2.) Set the exciter or transceiver to 50 watts carrier power. This power should show on the amplifier's FORWARD POWER meter. REFLECTED power should be very low

3.) Move the amplifier standby-operate switch to OPERATE

4.) Transmit while watching the Forward Power reading, quickly adjust exciter power for less than 25 amps Id current, or less than 600-watts power output

5.) For high duty cycle modes and long transmissions, or if linearity is a problem, reduce power. The amplifier has overload protection circuits, and will also attempt to reduce power if the FET's approach safe limits, but it is best to not rely on protection

6.) Adjust ALC to limit either forward power or amplifier PA current to a desired value at or below maximum ratings, counterclockwise reduces power and current. The ALC light should just flicker if ALC is limiting power properly. If the ALC light is on almost continuously, reduce the transmitter's power output setting

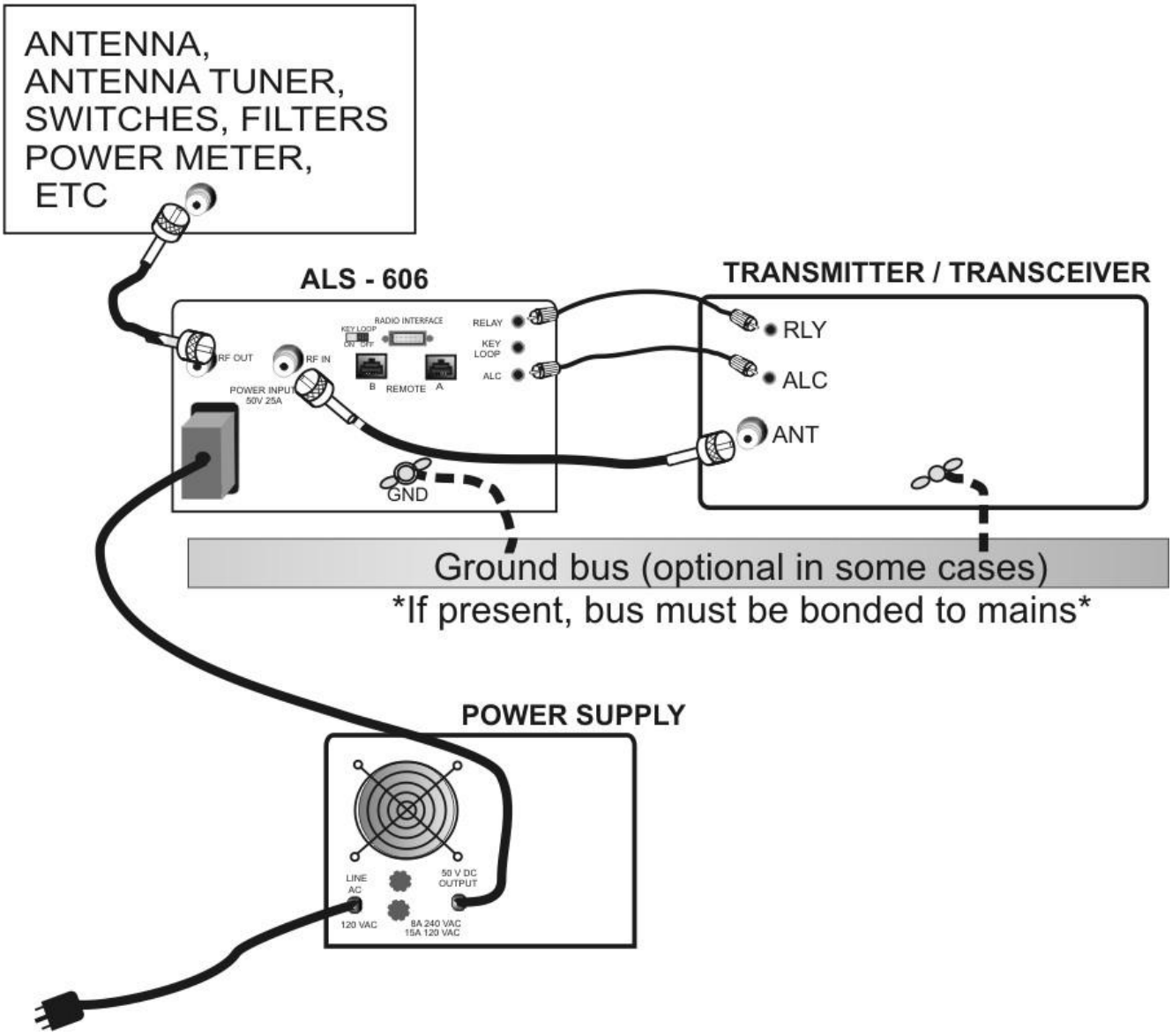

Typical Wiring

Table of Contents

TABLE OF CONTENTS **6**

AMPLIFIER FEATURES **7**

POWER SUPPLY **10**
Power Line Requirements 11
Power Supply Features 10
Power Supply Location 11

GENERAL INFORMATION **11**
Amplifier 12

INSTALLATION **12**

INTERCONNECTION WIRING **15**

AMPLIFIER REAR PANEL **17**

FRONT PANEL **19**

OPERATION **15**

MARS OR CAP OPERATION **15**

INITIAL OPERATION **20**

CIRCUIT BOARDS **22**

TECHNICAL INFORMATION **22**

Amplifier Features

This amplifier provides the following standard features:

- 160- through 6-meter operation, full-power on six meters
- Four conservative linear-service rated 50-volt MOSFET transistors
- New push-pull stripline PA layout with exceptional VHF performance
- Energy-efficient solid-state design greatly reduces heat, <100-watts power line draw on receive
- Exceptional harmonic suppression
- Operational in a few seconds, no long filament warm-up time
- Clean layout with easy-to-service modular construction
- Quiet variable-speed forced-air cooling system
- Power module current and voltage meters with LED illumination
- Accurate PEP Forward and PEP Reflected output power metering
- Reflected power protection
- Thermal overload protection
- Bandswitch error protection
- Easy to understand front panel LED indicators for rapid fault-error diagnosis
- Standard negative-going ALC output with front panel adjustment
- ALC metering and ALC LED indicator
- Fully-regulated external switch mode power supply, or linear unregulated supply
- Compact size 14” deep x 7” high x 9.5” wide
- Weight amplifier section 15 pounds

Power Supply

ALS-600PS

Power Supply Features

- Normal operating range is from 100 volts up to 130 volts 50/60Hz (12-amperes typical full carrier power) or between 200 and 250 volts, 50/60Hz (6 amperes typical at full carrier power)
- A unique "buck-boost" winding allows compensation for up to six different power line voltages centered on 115 and 230 volts. This versatile Ameritron feature maintains optimum voltages on the amplifier components for maximum performance and life
- The ALS-600PS standard power supply uses an input choke to provide low power factor loading on power lines. This reduces the peak currents drawn from the line and improves the voltage regulation of the supply. This makes the ALS-600PS generator and inverter friendly within the acceptable powerline frequency range of 50 to 60 Hz
- Step-start to limit stress on power supply components
- An illuminated cross-needle meter monitors 50V line output voltage and current
- Weight 33 lbs.

ALS-600SPS

Power Supply Features

- Efficient operation from 100-130 volts ac (12 amperes typical at full output power) or
- Low standby and receive power drain, typically less than 100-watts
- Generator and inverter friendly with acceptable powerline frequency range 40 to 400 Hz
- Fully-regulated current-limited outputs
- Excellent voltage regulation
- Exceptional filtering and RFI suppression eliminates receiver birdies common to most SMPS
- Light weight 13 lbs.
- Inrush protection
- An illuminated cross-needle meter monitors 50V line output voltage and current.

The ALS-606 external power supplies contain 14-volt positive and negative supplies, as well as a 50-volt 25-ampere continuous (30-ampere peak) main supplies. The ALS-606 PA (power amplifier) module operates from 50-volts, giving a total dc supply rating of 1250 watts average power and 1500 watts peak dc power. The 12-volt supplies are for illumination, bias, and control functions.

Power supply to amplifier interconnections are through a heavy-duty cable using reliable Cinch Jones connectors.

Power Line Requirements

This amplifier ships wired for a nominal mains voltage of 120 Vac with either supply. Maximum powerline current at full power output is 12 amperes at 120 volts. 250-volt rated 15-ampere fuses protect the power line. ***Always use 125V or 250V line fuses.*** The linear supply requires changing taps for different line voltages. The switching power supply is voltage regulated, current limited, and automatically adapts to any mains voltage between ~95 Vac and 135 Vac. The ALS-600SPS switching supply does not require adjustments or voltage tap changes.

Note: 240-volt power mains operation is possible. This will not normally increase power. Because average power is very low, SSB operation is generally unaffected by 120- or 240-volt operation. 240-V fuse size is 8-amperes maximum, fast blow only. The fuse must have a voltage rating of 250VAC

Power Supply Location

Locate the power supply in a ventilated area convenient to the amplifier location. Avoid placing the power supply next to sensitive equipment, such as audio processors, transceivers, or microphones. For safety, ground the wing nut stud on the supply rear to the station ground buss. The station ground buss should comply with National Electrical Codes. NEC safety and fire protection codes mandate direct bonding of station grounds to the home powerline entrance ground. Station ground rods not directly bonded with a low impedance connection to utility entrance grounds will increase equipment or property damage, and increase personal risk, significantly.

General Information

Alert Codes

This amplifier has front panel alert codes using the SWR, PA, TX, warning LED's and bandswitch band indicators. When a fault code appears, the amplifier is disabled. When an operating problem is corrected, operation is restored and alerts canceled by moving the front panel Standby/Operate switch to **Standby**. The following table applies to faults:

Warning light Steady	Warning light Flash	Fault	Cause or Cure
SWR	TX	Antenna Reflected Power	High antenna SWR or intermittent antenna or feedline connection
SWR, PA	Band	Wrong filter Filter input SWR	Exciter or amplifier on incompatible band, filter failure
	PA, TX	PA FET too hot	Excessive power for duty cycle or SWR, lack of proper airflow
	10M, PA, TX	Illegal 11 meter	Excessive 27 MHz signal level
	REM, PA	No data or bad band data when on remote	Defective or improper remote cable, or bad radio band data information

Amplifier Overview

The Ameritron ALS-606 is a solid-state, 600-watt nominal RF output power, 1.8-54 MHz amplifier. The ALS-606 meets or exceeds all FCC requirements governing amateur radio external power amplifiers.

The ALS-606 uses four low-distortion MRF-150 (or equivalent) SSB RF power transistors in push-pull parallel. Ameritron recommends running 600 watts or less peak power for maximum linearity and component life. It is always a good idea to use an oscilloscope to verify proper linear SSB operation.

Protection circuitry reduces power as transistors approach conservative thermal limits, and disable the amplifier before exceeding safe transistor operating temperature limits. (See warning table.) A fan speed-control system monitors heatsink temperature.

Room temperature amplifier bias is nominally 250 mA per FET, or approximately 1-ampere total. Amplifier supply voltage is nominally 50-Vdc. Maximum allowable voltage is 58 volts.

Harmonic suppression comes from push-pull operation of linear devices, followed by 5-pole low-pass filters. This amplifier uses modern multi-layer high voltage chip capacitors where applicable. Chip capacitors, due to low internal inductance and higher Q, offer significantly improved harmonic suppression. Harmonic and spurious suppression is excellent; external low-pass filters have minimal effect on TVI. The most likely cause of any RFI or TVI will be fundamental overload from inadequate consumer device RFI immunity.

Relay switching time is approximately ten milliseconds. Radio adjustable TX delay should be set to ten mS.

The T/R “Relay” control jack is well within the range of almost any transceiver or radio. The “Relay” jack has an open circuit voltage of approximately 12 volts, and closed circuit current less than 15 mA. Virtually any modern amateur radio will directly key this amplifier.

This amplifier includes full metering using large easy-to-read conventional cross-needle panel meters. The meters read all critical parameters, including Forward and Reflected peak envelope RF power.

Installation

Please look your amplifier and power supply over carefully. Observe the air inlet and outlet ventilation holes. Facing the amplifier front panel, the cooling air inlets are on the top left and lower right side, including the right hand side cabinet bottom. Warm air exits vents at the cabinet rear.

While outlet air will not be particularly hot, it is never a good idea to have warm air blow into heat sensitive equipment, such as transceivers or other power amplifiers. Have the same consideration for your new amplifier and power supply. Be sure air inlet temperature is not substantially above normal room temperature. Ideally, the air inlet temperatures should be below 32° C or 90° F, although temperatures up to 41° C or 106° F are permissible. Should ambient temperatures exceed these limits, it might become necessary to reduce duty cycle or power.

Warning: Do not block cooling air inlets and outlets!
Never expose the amplifier to excessive heat, dirt, water, or mist.

Installation Clearances

The amplifier must have a clear area to the bottom, both sides, and top for proper airflow and to the rear for exhaust air and interconnection wiring. It is especially important to avoid obstructions that block the air inlet on the top left, as well as both lower sides. One to two inches clearance is normally adequate for full ventilation. Keep any papers or loose objects that might impede airflow away from the air inlets and outlets.

Locate the amplifier and power supply away from sensitive equipment such as microphones, audio processing equipment, or low level audio or radio frequency amplifiers. Generally, the best location for the power supply is below the operating desk and away from antenna feedlines. This will minimize unwanted mechanical, acoustical, and electrical coupling.

The power supply produces very little heat, but the air inlet and outlet must remain open to normal room temperature air.

Installation Warnings

Accessory Equipment and Devices
Second to operator error, the most common amplifier failure or erratic fault protection shutdown is from antenna switches, lightning protection devices, or baluns with lightning spark gaps in high SWR coaxial lines. Do not use 50-ohm lightning protection devices on lines with high SWR, such as between and antenna and antenna tuner. Be sure any lighting protection devices are in working order.

Installation, Wiring, and Connections

The ALS-600SPS switching power supply is factory wired for 100-130 Vac. The linear ALS-600PS is prewired for 120-125 Vac nominal voltage. Both use standard NEMA-5-15P 15-ampere 120-volt plugs. The round center pin is the safety ground. Do not remove the safety ground.

CAUTION! ***Before*** connecting the power supply to an electrical outlet, always be sure you have completed the following four steps:

1. **Insert the <u>15-ampere 250V fuses</u> into the two black fuse caps.**
2. **Insert the fuse and cap assemblies into the power supply's fuse holders. The fuses lock in place with a push and slight turn.**
3. **Connect the power supply to the amplifier.**
4. **Be sure the amplifier power switch is *off*.**

Caution! Fuses have both voltage and current ratings. Use only 250V rated fuses in this device. The voltage rating is generally marked on fuses. DO NOT use automotive-type low voltage fuses in any power line application. See power supply instructions.

Warning: Never insert the power supply cord into the outlet until you have completed steps 1 through 4 above!

Position the amplifier at or near the desired location on your operating desk so you have access to the rear panel, and connect the rear panel cables. **Do not connect the power mains at this time!**

Station Ground

Common rumor is a station equipment ground reduces RFI (radio frequency interference), reduces lightning damage, or improves signal levels. Generally, changes in RFI or signal quality, with the addition or removal of a station ground, indicate an antenna or feedline installation problem. Typical problems causing desktop RF problems include the following:

1. Lack of suitable baluns
2. Improper feedline routing near antennas, or improperly designed antennas
3. Antennas too close to the operating position
4. Poor equipment cabinet design, such as non-bonded or grounded equipment covers or panels
5. Poorly designed low-level audio line shield entrances, such as shields allowed to enter cabinets instead of grounding at the enclosure entrance
6. Improper antenna feedline building entrance, lacking a properly grounded entrance panel

Rather than patching a system problem at the desk, it is much better to correct the actual problem source.

Coaxial Line Isolators

The goal of every operating position is to maintain all equipment cabinets and housings at the same RF potential. Never install coaxial line isolators between desktop radio equipment. Isolators on or near the desk are contrary to this goal, and actually promote or encourage RF potential differences between different desk equipment. If an RF problem appears at the operating position, correction, repair, or replacement of defective equipment is in order.

Proper line-isolator installation points are either just outside the operating room entrance and/or close to the problem's actual source. If the antenna system has excessive common mode current on feedlines, the desktop has defective cables or connectors, or if equipment has poor equipment cabinet design such as poor cover bonding to chassis, locate and correct the actual problem.

Safety and Lighting Grounding

The power supply cabinet grounds through a safety ground pin on the power plug. This system depends on a properly wired power outlet.

Lightning protection grounds do very little good at the operating desk. Lightning protection grounds belong at the antenna cable entrance to the building. Station ground rods ***must always*** electrically connect through low impedance and resistance conductors to the powerline entrance ground. The national electrical code in the USA prohibits isolated ground systems at dwelling entrances. ***Isolated*** ground rods or systems connected to conductors entering a dwelling increase damage likelihood during storms, and increase fire hazard and shock risk.

RF grounds generally belong at the antenna or at the feedline entrance. With the special exception of a small floating counterpoise grounds, RF grounds at or very near the dwelling should bond into the mains ground outside the dwelling. This is especially true with earth contact grounds.

There is a ground lug on the amplifier rear panel. This ground lug provides a convenient chassis connection for operating positions with ground bus on the desk. A station ground bus helps ensure desk area equipment cabinets are close to the same electrical potential for radio frequencies and lower. Equipment ground lugs are ***NOT*** for independent wires or connections to external ground rods or ground systems from each piece of equipment. They are for connection to a desktop ground bus system common to all equipment, if you prefer to use such a system.

Independent ground wire connections are counterproductive. Never use RF isolators between the amplifier and radio. Never use long independent wires to external grounds. Never connect desk equipment to ground rods that do not bond into the mains entrance ground rod.

General Operation

This amplifier covers all Amateur Radio frequencies below 54 MHz, as restricted by FCC or your local governing authority. Once you have established proper connections, please set the amplifier BAND SELECT control (Fig. 2, ref 3) to one of the following bands:

Band	Frequency Range	Notes
160	1.8 - **2.1** MHz	
80	3.2 - **4.2** MHz	
40	6.0 - **7.5** MHz	
30	7.5 - **14.5** MHz	USA 30-meter power limit currently 200-watts
20	7.5 – **14.5** MHz	
17	14.5 – **22.0** MHz	
15	14.5 – **22.0** MHz	
12	22.0 – **30.0** MHz	Amplifier automatically disables above 25 MHz
10	22.0 – **30.0** MHz	Amplifier automatically disables below 28 MHz
6	50.0 – **54.0** MHz	

Frequency Limits Table 1

Caution: This amplifier has an FCC mandated automatic disconnect and other features preventing 27-MHz operation. There is no available circuitry or control provision to circumvent this lockout.

MARS or CAP Operation

For licensed amateur radio operators participating in Military Affiliate Radio Systems or CAP, this amplifier is suitable for use on all frequencies between 1.8 and 54 MHz with some precautions. The upper frequency limits are in bold type in the table above. Do not operate above the bold-type frequency limits in the table above or PA (power amplifier) or filter damage may occur.

This amplifier has significantly cleaner output purity than FCC part 97.307 requirements (January 2016) when operated inside all ***amateur bands*** listed in the table above. Ameritron does not guarantee harmonic suppression or operation in applications outside standard amateur radio bands.

Most non-amateur services prohibit use of non-commercial radio equipment. This amplifier automatically prevents operation between 25 and 28 MHz. Operation in the 25-28 MHz range is not available with this product, irrespective of licensing or end-use.

Warning Lights

The ALS-606 has two primary warning lights in the center of the front panel, SWR and PA. When SWR or PA warnings illuminate from an operating fault, the amplifier defaults to a forced bypass mode. Operational faults and the forced bypass reset by placing the amplifier in standby.

ALC: The yellow ALC light is at the far left of the warning light cluster, next to the ALC control. The yellow ALC light is not a fault indicator. The ALC light indicates ALC output. Occasional flashing is normal with properly adjusted ALC. An almost steady ALC light generally indicates too much ALC.

TX: The TX indicator illuminates steady green when the amplifier is “keyed” or in the transmit mode.

The SWR and PA indicators serve exclusively as warnings. The SWR and PA, in conjunction with TX and Band indicators, flash in certain “codes” to indicate severe operational problems. The following table applies to faults:

Warning light Steady	Warning light Flash	Fault	Cause or Cure
SWR	TX	Antenna Reflected Power	High antenna SWR or intermittent antenna or feedline connection
SWR, PA	Band	Wrong filter Filter input SWR	Exciter or amplifier on incompatible band, filter failure
	PA, TX	PA FET too hot	Excessive power for duty cycle or SWR, lack of proper airflow
	10M, PA, TX	Illegal 11 meter	Excessive 27 MHz signal level
	REM, PA	No data or bad band data when on remote	Defective or improper remote cable, or bad radio band data information

Interconnection Wiring

Interconnections Figure 1

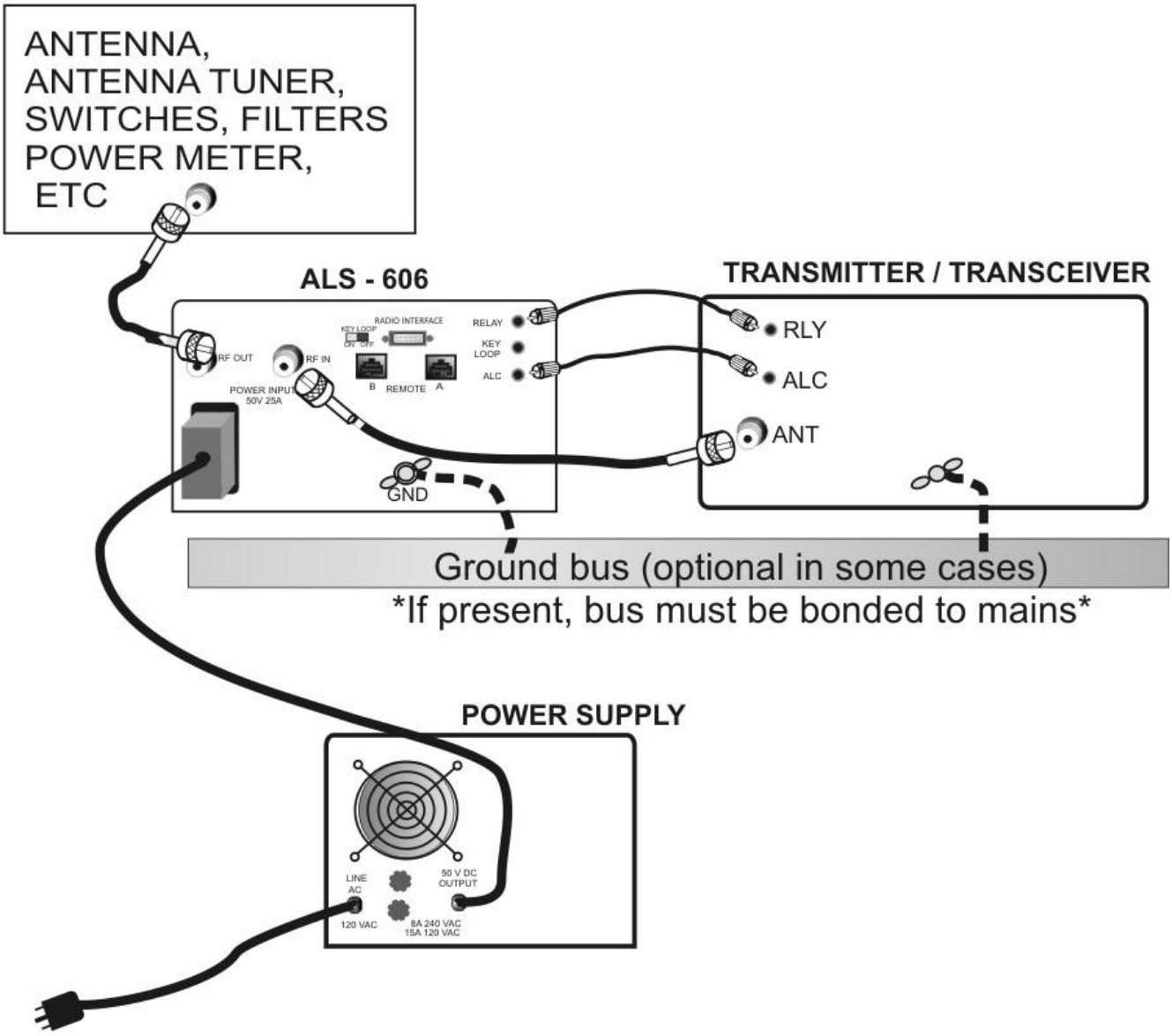

Amplifier Rear Panel

50V 25A The power supply must be unplugged from the power mains before installing or removing this connector. This connector is indexed by a slight vertical offset in the two round index pins. Observe spacing offsets to correctly mate the pins. Seat the male plug fully onto the amplifier rear panel male connector pins. After seating, the power supply can be plugged into the AC mains outlet.

ALC Optional connection. Connects to radio ALC input and provides power limiting.

RELAY Connect to radio amplifier keying line. Radio must pull this 12-volt 15mA line below 2 volts to transmit.

GND Connect to station ground bus, if available. This connection is primarily for extra safety.

RF IN Connect through good 50-ohm coaxial cable of any reasonable length to radio's antenna output connector. This can be a smaller cable, such as RG-58/U, and should not be needlessly long.

RF OUT To 50-ohm antenna, antenna tuner, or power meter. This is the high power output. 50-ohm coaxial cable and system beyond this connector must safely handle at least 600-watts.

RADIO INTERFACE This connector is for use with ***Ameritron*** radio interface cables. It allows automatic band selection (following the radio). It also provides amplifier actuation in transmit mode with some radios.

REMOTE These RJ45 connectors are for an Ameritron remote control head, or remote operation with an interface box. They provide access to controls, including most metering functions.

KEY LOOP Key loop switch and jack are for use with certain automatic antenna tuners. Instructions will be in tuner manual. Key Loop switch must be off when using remote cable unless using this jack.

1.) If you use a desktop grounding bus system, connect the station ground bus to the amplifier rear panel wing nut. National safety codes require the station ground electrically bond to the power mains safety ground at the building entrance. Do not connect the amplifier to its own isolated ground rod or ground system.

2.) Connect the power supply to the amplifier.

3.) Connect the **RELAY** line to the transceiver's amplifier control port. This port is usually described or defined in the amplifier interfacing section of the radio or transceiver manual. This port must pull low for transmit, and be open circuit when receiving. Nominal relay control voltage from the ALS-606 is 12 volts positive with only 15 mA current. You should always check your transceiver's manual, but almost any standard transceiver directly interfaces with this amplifier.

4.) Connect the **RF OUT** (output) port to the appropriate point in your station. This is the high power RF output cable. This connection would go to your (minimum) 600-watt rated Power/SWR meter, antenna, or antenna matching device. Good quality Mini-8 or RG-8X cables are acceptable for anything but RTTY use, although larger RG-8 style cables are normally preferred. ***The antenna matching system, or antenna tuner, must connect to this port.***

5.) Connect the **RF IN** connector to your transceiver. Do not install any active antenna matching devices on this port. In general, the shortest and most direct cable connection is best, although high quality cables can be very long without adverse effect on performance. RG-58/U or Mini-8 (RG-8X) style cables are acceptable. ***You should never use a tuner of any type on the amplifier input, nor should you drive this amplifier with over 100 watts peak envelope power. Never use a non-FCC accepted device with this amplifier.***

6.) The **ALC** line is often not required, but ALC is a useful last resort safety measure. The ALC system monitors the ALS-606 RF output power and reflected power, and reduces exciter power if power exceeds front panel ALC control limits.

7.) Operate the bandswitch manually during initial testing. Do not connect band decoders, band data lines, or computer interfaces until initial tests are completed and the amplifier is functioning normally.

Front Panel

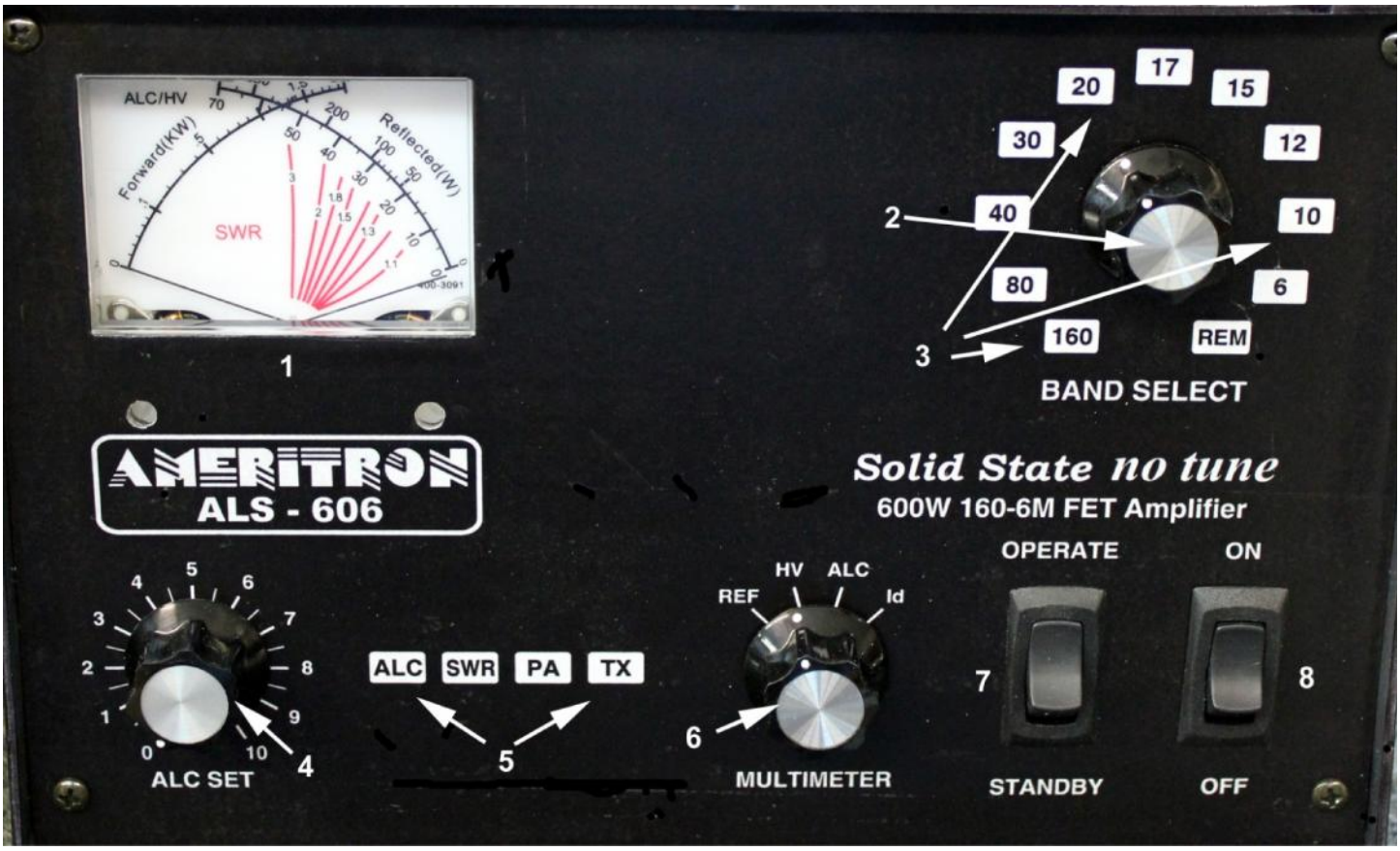

Amplifier Front Figure 2

The front panel contains the following indicators and controls. To prevent damage, become familiar with the front panel ***before*** operating the amplifier.

1.) FET module current, voltage, ALC, and reflected power right scale. Power output left scale. Multimeter (reflected power, module voltage, ALC, or module current) selected by 6

2.) BAND or REMote selector knob

3.) Backlit BAND or REMote LED indicators, also warning if flashing

4.) ALC limit adjustment

5.) Backlit Function and Fault Warning LED indicators

6.) Multimeter scale function selector knob

7.) Operate and Standby switch, also resets fault warnings

8.) Main Power, also resets power supply overload

Note: The meter's left scale-arc (fig.2 ref 1) continuously indicates forward peak envelope power (PEP) output directly in kilowatts. It is 100 watts, or 0.1 kW, per meter scale picket. PEP has no fixed relationship to long-term average power except, for constant amplitude carriers like a steady CW carrier, when PEP and average powers are equal. PEP is the highest average power during one (or more) radio frequency cycle(s) at the modulation envelope crest.

The meter's rightmost scale-arc indicates PEP reflected power in watts on the upper scale numbers and pickets. Notice power meter calibrations are not evenly spaced. Lower scale numbers and pickets are evenly spaced, and are for all other functions. The lower right scale is used for relative ALC setting, power amplifier module voltage (0-70 volts), and power amplifier current (0-70 amperes). Nominal voltage is 50 volts; maximum safe current is 25 amperes. Maximum safe output is 600 watts peak; maximum safe peak reflected power is 125 watts.

Initial Operation

For personal and equipment safety, double-check all wiring and connections (Interconnections fig.1) before turning power on. After verifying all power supply and amplifier connections, follow the procedures below:

1. Place the **MULTIMETER** switch (fig.2 ref 6) in the **HV** position. The multimeter is the right-side scale on the panel meter (fig.2 ref 1), and reads on the 0-70 right scale bottom. Find 50 on the scale. HV reading should be approximately 50 volts whenever the amplifier is ON. Any voltage above the Forward (KW) arc crossing is unsafe.

2. Place the **ALC SET** control (fig.2 ref 4) full clockwise (10 on knob scale). This sets ALC to engage at maximum possible power, which effectively will disable the ALC for initial testing.

3. With the **STANDBY/OPERATE** switch (fig.2 ref 7) on **STANDBY**, turn the power switch (ref 8) **ON**.

4. There might be a slightly delayed "click" from the power supply. **HV** (fig.2, ref 1) should immediately rise to near full scale. The meter and the appropriate **BAND** LED (fig.2, ref 3) should illuminate.

5. The multimeter's **HV scale** (fig.2, ref 1, lower right scale arc) should indicate approximately 50 volts. Any voltage above the Forward (KW) arc crossing is unsafe.

6. Rotate the **BAND** switch (fig.2 ref 2 and 3) through all positions. The appropriate **BAND** LED will illuminate, band-filter relays will audibly switch when moving between 160 and 80 meters, 80 and 40 meters, 40 and 30 meters, 20 and 17meters, 15 and 12 meters, and between 10 and 6 meter selector positions. There should be no filter change moving between 30 and 20, 17 and 15, or 12 and 10-meter selections since these band groups share a common filter in each pair.

7. Set the **BAND** switch (fig.2 ref 2) to a band where you have a good 50-ohm high-power load connected.

8. Change the meter switch (fig.2 ref 6) to **REF**. In this position, the multimeter indicates PEP reflected power.

9. The next objective is to have a steady unmodulated low-power carrier. With no modulation in the FM, AM, RTTY, or CW mode, and with the amplifier still on standby, adjust the exciter's power to about ten watts. Verify your radio is supplying reduced power, ideally around 10-20 watts carrier (not critical),

and that VSWR of ***the antenna system*** or load is low. There should be almost no deflection on the reflected power scale (fig.1 ref 1) with the **MULTIMETER** switch in the **REF** position. If the meter indicates noticeable reflected power, check the RF cables or antenna system. **Reminder: You cannot use a tuner in your radio or between your radio and this amplifier to match the antenna system. Any antenna matching must be between the amplifier and the antenna, and the antenna tuner and everything else connected beyond the amplifier must conservatively handle 600 watts of both carrier and peak envelope power.**

10. Place the amplifier in **OPERATE** position (fig.2 ref 7). Be sure the amplifier BAND SELECT (fig.2 ref 3) matches the band selected on the transceiver.

11. Place the transmitter or transceiver into transmit in FM, AM, RTTY, or CW modes. The green **TX** LED (fig.2 ref 5) should light. The Forward (KW) power scale (fig.2 ref 1) should increase to very roughly ten times the initial exciter power reading. Reflected power should remain very low, and the PA current should increase on the right meter 0-70 scale (fig.2 ref 1) when in the Id Multimeter position. Only the TX and BAND SELECT LED's should illuminate.

12. Briefly, increase exciter power until the amplifier reaches 600-watts output, ***or*** increase power until the exciter reaches maximum power without exceeding 600-watts amplifier power. Watch the Id MULTIMETER position on the right meter 0-70 scale, and never exceed 30 amperes. Target Id reading is 25 amperes or less.

13. After verifying all of this, and understanding control locations and function, the amplifier is ready to operate.

This amplifier produces approximately 600-watts PEP output power with approximately 70-watts PEP drive. This is ***nominal*** power, and can vary slightly from band-to-band.

ALC Adjustment

It is unfortunate, but radio manufacturers do not have standardized interfaces. Because of this, ALC requires some initial adjustment. If the ALC voltage is too low, the ALC will not provide good control of power levels. If the ALC loop gain is too high, the ALC can cause a "power bounce" as power attempts to settle at the desired ALC power threshold. This overshoot, dip, and recovery is caused by slow radio ALC response time. Excessive ALC control loop gain aggravates power bounce.

ALC attack bounce shows on a steady carrier (such as RTTY, CW, or FM) as a high initial peak power reading followed by a deep null. The deep null is followed by a slow settling to the desired power level. On SSB, it will show as a slow warble or modulation of power levels, especially at the very start of voice transmissions.

If ALC attack bounce is observed, the ALS-606 will require ALC gain adjustment. The ALS-606 has a small flat-blade screwdriver adjustment for setting ALC gain. This adjustment is accessible through a small hole located on the left cabinet side behind the front panel, near the panel meter.

ALS-606 Functional Overview

The ALS-606 is an amateur radio multiband radio frequency linear power amplifier with 600 watts PEP nominal output. This device complies with technical standards of FCC rules, CFR Title 47 part 97.317(a) and (b).

General Operation

This linear amplifier covers the 160, 80, 40, 30, 20, 17, 15, 12, 10, and 6-meter amateur bands. It typically requires 50-watts to 75-watts drive power. When power is off or when the amplifier is not in transmitting mode, internal relays bypass the amplifier. When power is ON and the standby switch is in the OPERATE position, and when the rear panel RELAY control line is held low (below 1 volt), exciter power is routed through input relay RLY1 to the PD8m power attenuator board.

ATTENUATOR BOARD

The attenuator board has two 3dB attenuators. A relay switches one attenuator out on six meters. This makes amplifier drive power requirements more consistent across the operating frequency range.

PA Amplifier

Power amplification comes from a single 600-watt power amplifier module. The PA module (PAM-606) uses four MFR-150 field effect transistors. Bias each MRF-150 at an equal quiescent current within the range of 100 mA to 300 mA. It is important to bias each FET the same. IMD performance changes very little within this bias range. Transistor conduction angle is slightly over 180-degrees, providing linear class-AB operation. Normal dc drain operating voltage is approximately 50 volts. The linear supply is unregulated, and can run as high as 60 volts without harm, although it is much better to keep voltage below 56 volts. See the power supply manual.

Unlike the standard Motorola based modules, the PAM-606 module uses two diametrically opposed push-pull pairs. This shortens ground path distance while simultaneously reducing circuit board groundplane current levels. This greatly improves VHF performance. The dual diametrically opposed push-pull pairs drive balanced low impedance striplines. The balanced striplines parallel at a unique 1:9 broadband matching transformer.

The linear RF power FET’s mount on a forced-air-cooled aluminum heatsink. Two dc fans cool the PAM-606 module and heatsink. Thermistor (PAM-606, R2) senses power amplifier transistor flange temperature. Transistor temperature thermistor R2 regulates bias voltage, reducing bias voltage as transistor temperature increases. This bias feedback system keeps transistor quiescent current stable independent of transistor junction temperatures. PAM-606 thermistor R2 also feeds a comparator. The comparator removes drive when transistor temperatures approach unsafe levels.

A second thermistor (PAM-606 R1) monitors heatsink temperature. Voltage at thermistor R1 regulates fan speed, increasing fan speed and airflow as the heat sink warms.

PAM-606 module bias comes from the CB-2 control board assembly. Each transistor has an individual bias adjustment, with minimum bias counter-clockwise from the top view.

The PAM-606 module employs significant negative feedback to reduce gain, improve gain flatness, improve linearity, and ensure stability. The FET’s have direct resistive voltage feedback across each individual transistor from drain-to-gate, as well as push-pull transformer (T2) coupled feedback common to the push-pull circuit. Push-pull operation, negative feedback, and linear biasing of FET’s provide significant pre-filter harmonic suppression.

1KWF6 Low Pass Filter Assembly

The PAM-606 module connects directly to the 1KWF6 circuit board assembly through a 50-ohm cable. Power enters the filter system through a directional coupler consisting of current transformer T2, capacitors C36-38, C40-42, and resistors R4, 5 and 6. This directional coupler detects termination errors at the filter's power amplifier side. These errors include filter band errors. A comparator on the CB2 control board monitors directional coupler termination errors. Any significant filter or antenna reflected power error disables the amplifier. Such errors normally come from selecting the wrong filter for the exciter's operating band, or having a poor load SWR on the amplifier.

The filter board directional coupler output routes through one of seven 5-pole lowpass filter groups. Relays, controlled by CB2 control board logic, select appropriate lowpass filter components.

Control and Protection Logic

The CB2 control board contains all protection and control logic. In the event of an operational fault, the CB2 locks out the amplifier and illuminates the proper front panel warning light sequence. The CB2 also contains bias, relay sequencing, and fan speed controls.

The CB2 board contains band-decoding systems, and automatically disables operation between 25 and 28 MHz in all ALS-606 amplifiers. The embedded 25-28 MHz lockout function cannot be disabled or changed.

SWR Directional Coupler

The rear panel directional coupler board samples line current and line voltage, vector summing line voltage and current samples before conversion to a dc output voltage. The resulting forward and reflected voltage represents forward and reflected power. The ratio of forward to reflected samples represent mismatch from ideal 50-ohm loads.

Circuit Boards

There are ten basic circuit boards plus one power amplifier modules in the ALS-606. The text below gives a brief description of each board's function.

1KWF6

The 1KWF6 is a 1kW rated low-pass filter. It is the very large topmost board with several large toroids and air wound inductors. This board contains filter input SWR fault detection and seven low-pass 5-pole filters. Additionally, antenna relay board **RLY** attaches directly to the 1KWF6 board.

BSW3

The BSW3 is located behind the **BAND** switch. It provides all band selection functions, as well as bandindicators.

CB2

The CB2 is located on the amplifier side between the band selector and power jack, below the attenuator board. The CB2 control board provides most control functions, including bias, fan speed, overload, wrong-band protection, and transmit-receive relay sequencing. It is the hub for nearly all functions, including external interfaces, power metering, and 12-volt busses.

MB1

The MB1 is located behind the front panel below the meter. It contains peak-envelope-power detection circuits, multi-meter switching, fault indicators, and ALC circuitry. There are four power meter adjustments on this board; forward power, reflected power, forward peak hold time, and reflected peak hold time. Shunts on a header, located on the board's upper edge, adjust panel meter brightness. This board also contains an ALC gain adjustment, which limits ALC voltage.

PA Module and Board

The PA board, along with a large forced-air cooled heatsink, forms a PA module. FET's are gain matched at the factory, and replacement FET's must be gain matched. This board does not have adjustments; bias adjustments are located on the CB2. The power amplifier module (located between the filter chassis and the cabinet bottom) is accessible by removing the amplifier bottom cover only. The cabinet cover must remain in place to support the rest of the sheet metal.

PD8m

The PD8m is located on the right side of the amplifier just above the panel containing the cooling fans. This board is slightly reconfigured from the PD8 used in the ALS1306 through removal of the matching transformer and combiner. The PD8m contains two ~3dB attenuator pads. One attenuator switches out to increase six meter gain. Do not modify, remove, or bypass the attenuators.

RJ45

The RJ45 board mounts on the rear panel. It contains two RJ-45 jacks for remote control interface.

RLY

The RLY board contains independent transmit and receive relays, one for RF output switching and the other for RF input switching. T/R relays activate with a low on terminals K (key) J1-3 and RJ1-7. The **CB2** board contains relay timing logic.

SWR

The SWR board is on the rear panel in front of the RF output connector. It is a traditional 50-ohm directional coupler. The null adjustment is accessible through a rear panel hole.

Schematics

Filter 1KWF6

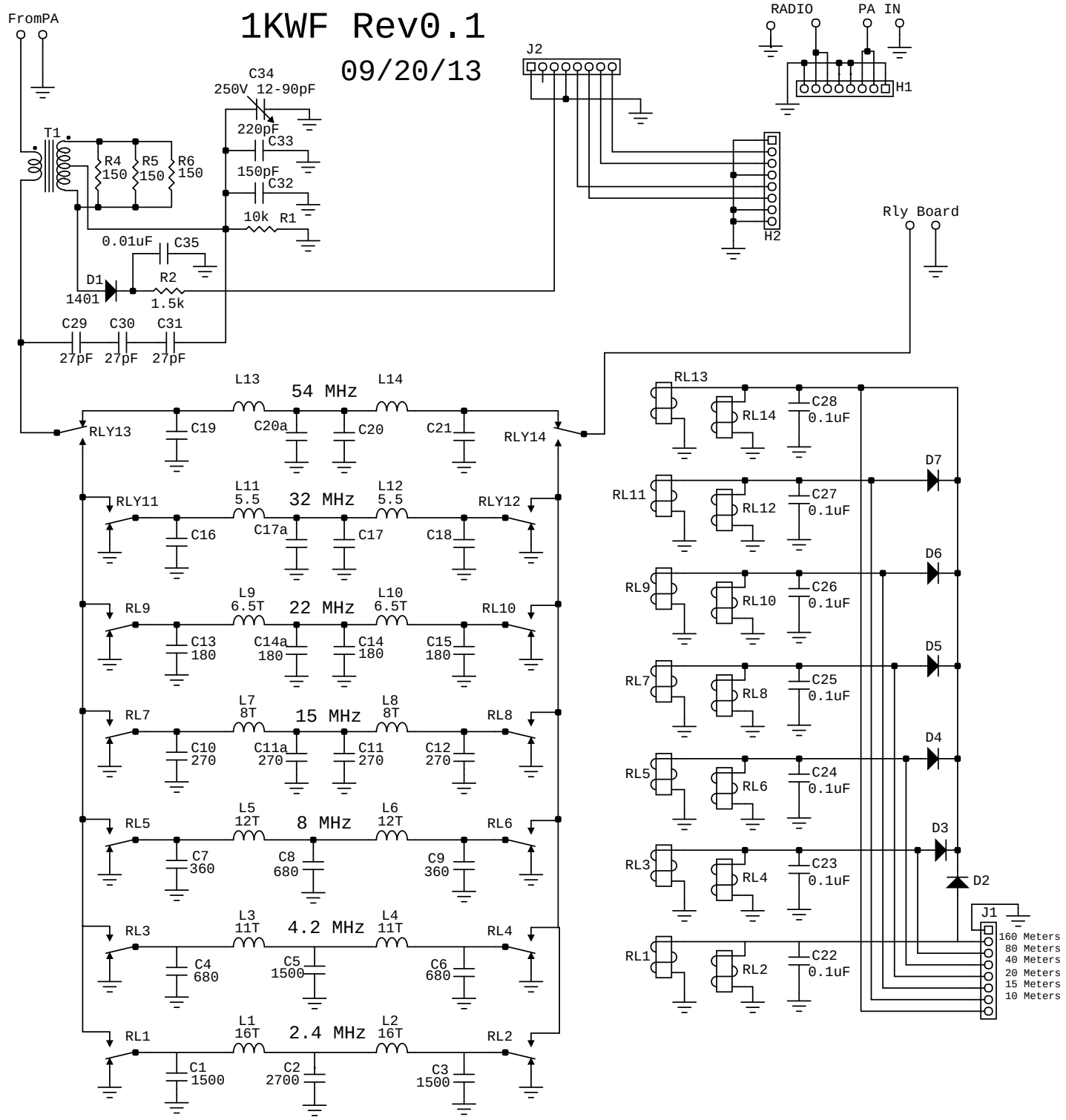

1KWF6 output filter Figure 3

Bandswitch BSW3

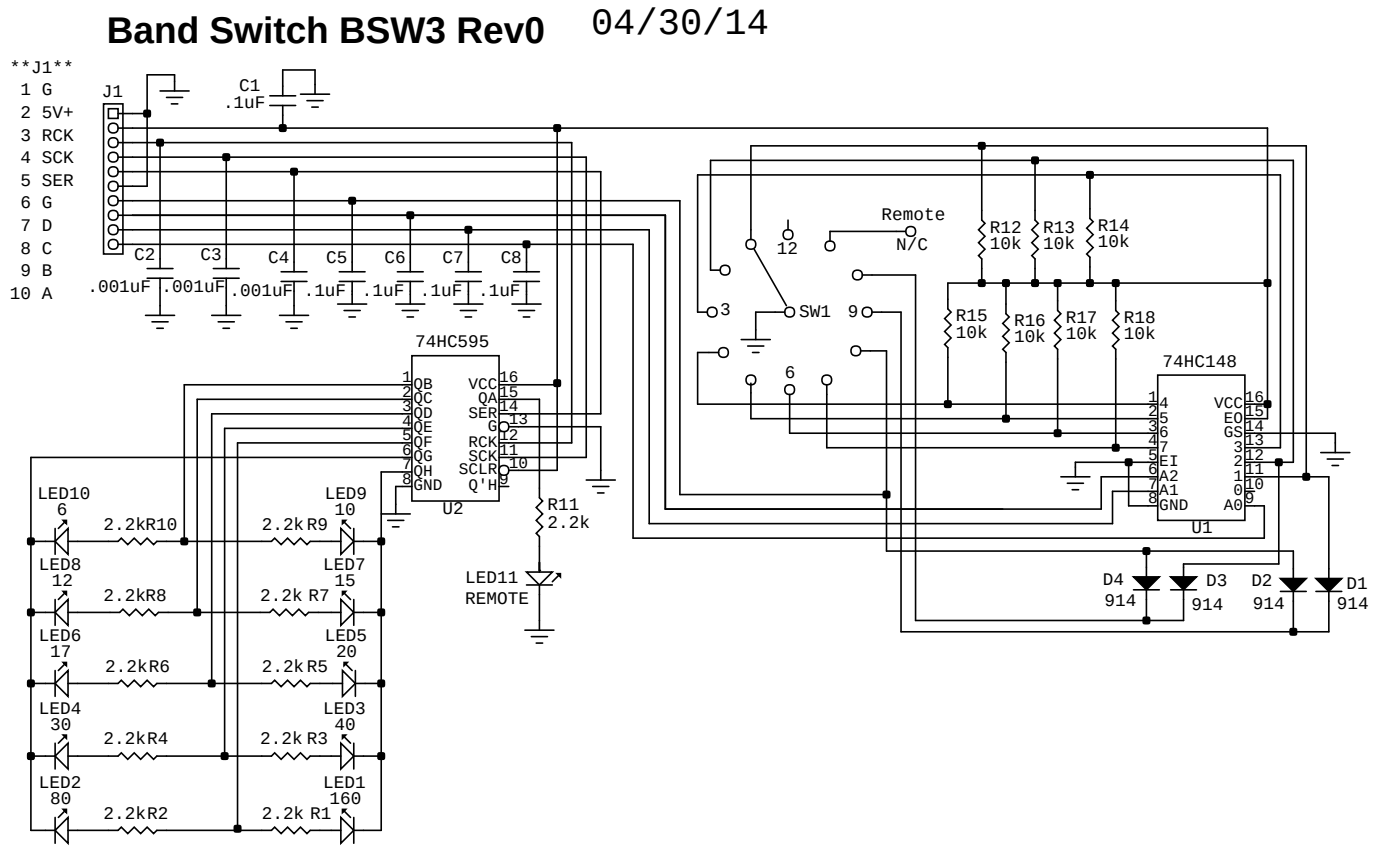

BSW3 bandswitch figure 4

Control Board CB2

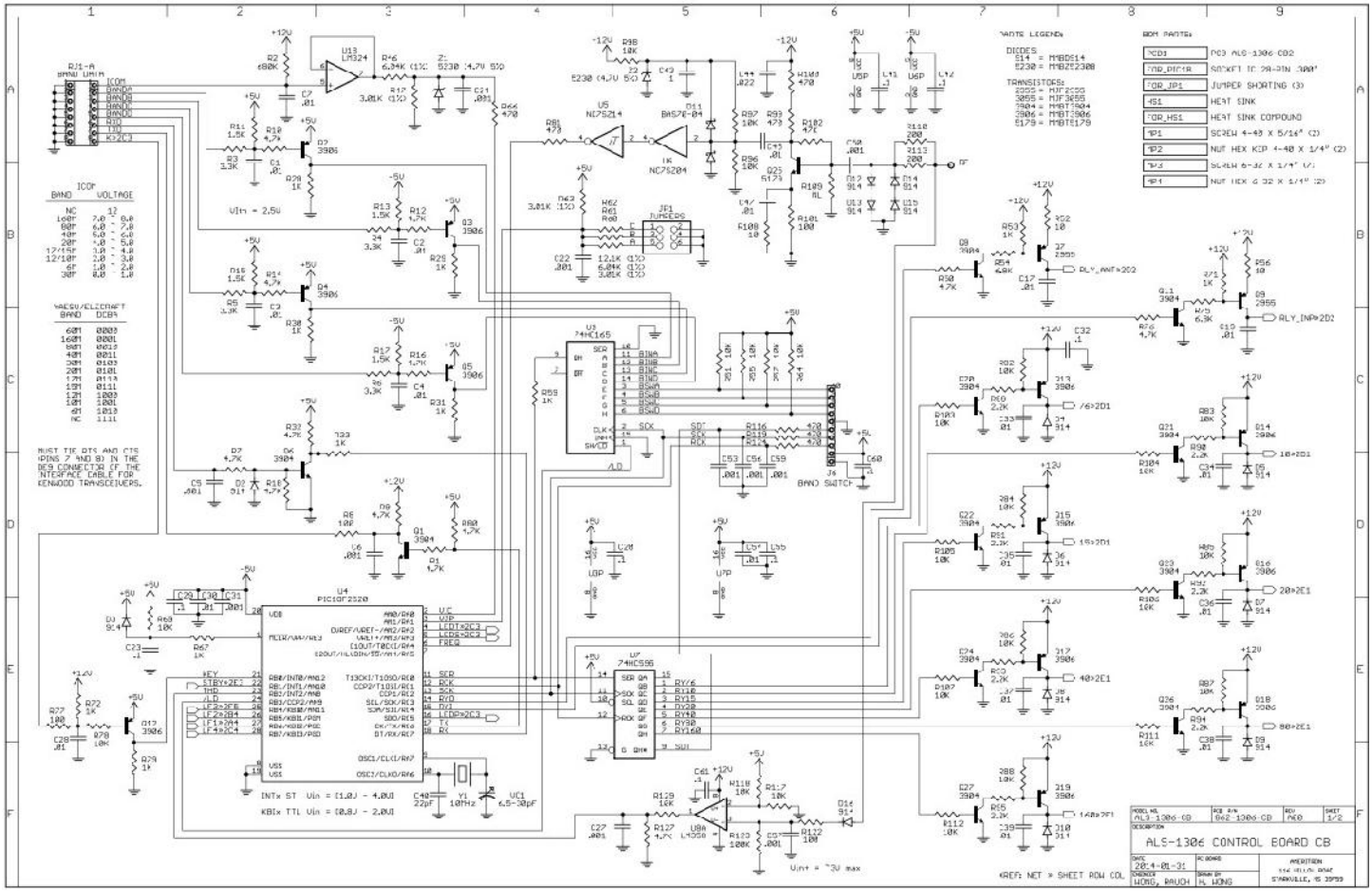

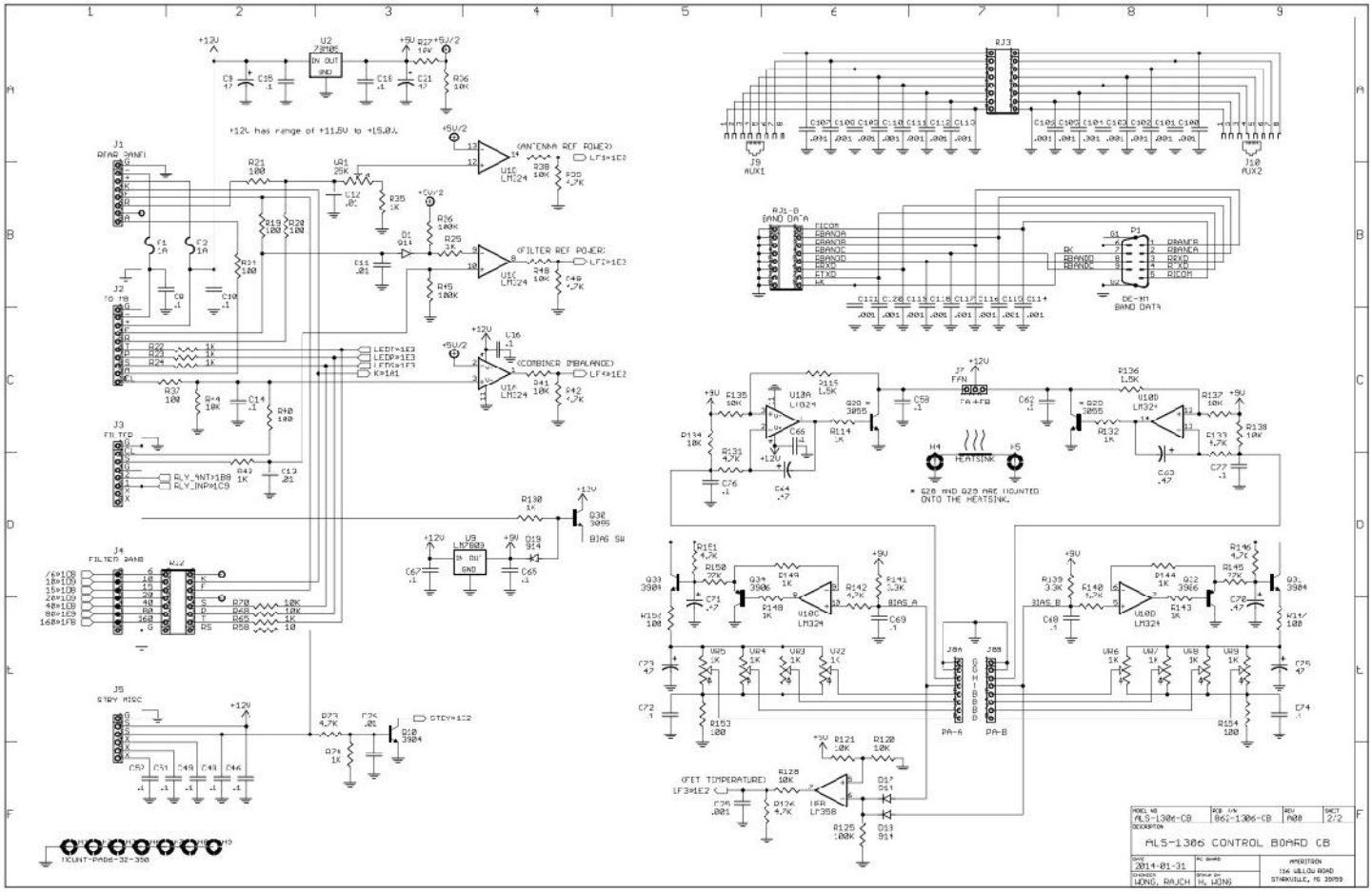

CB2 control board Figure 5

Metering Board MB1

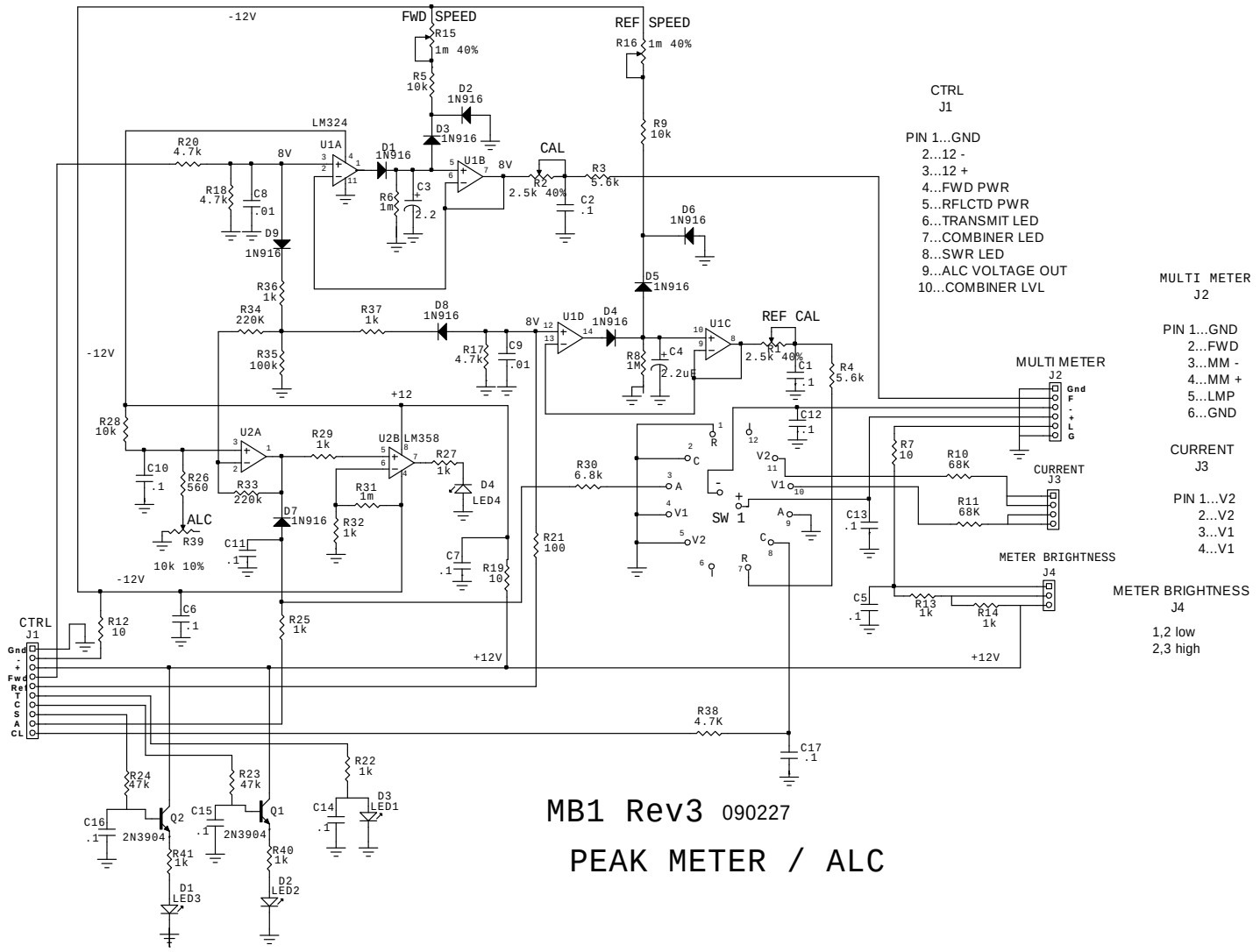

MB1 ALC/metering board Figure 6

PA Module

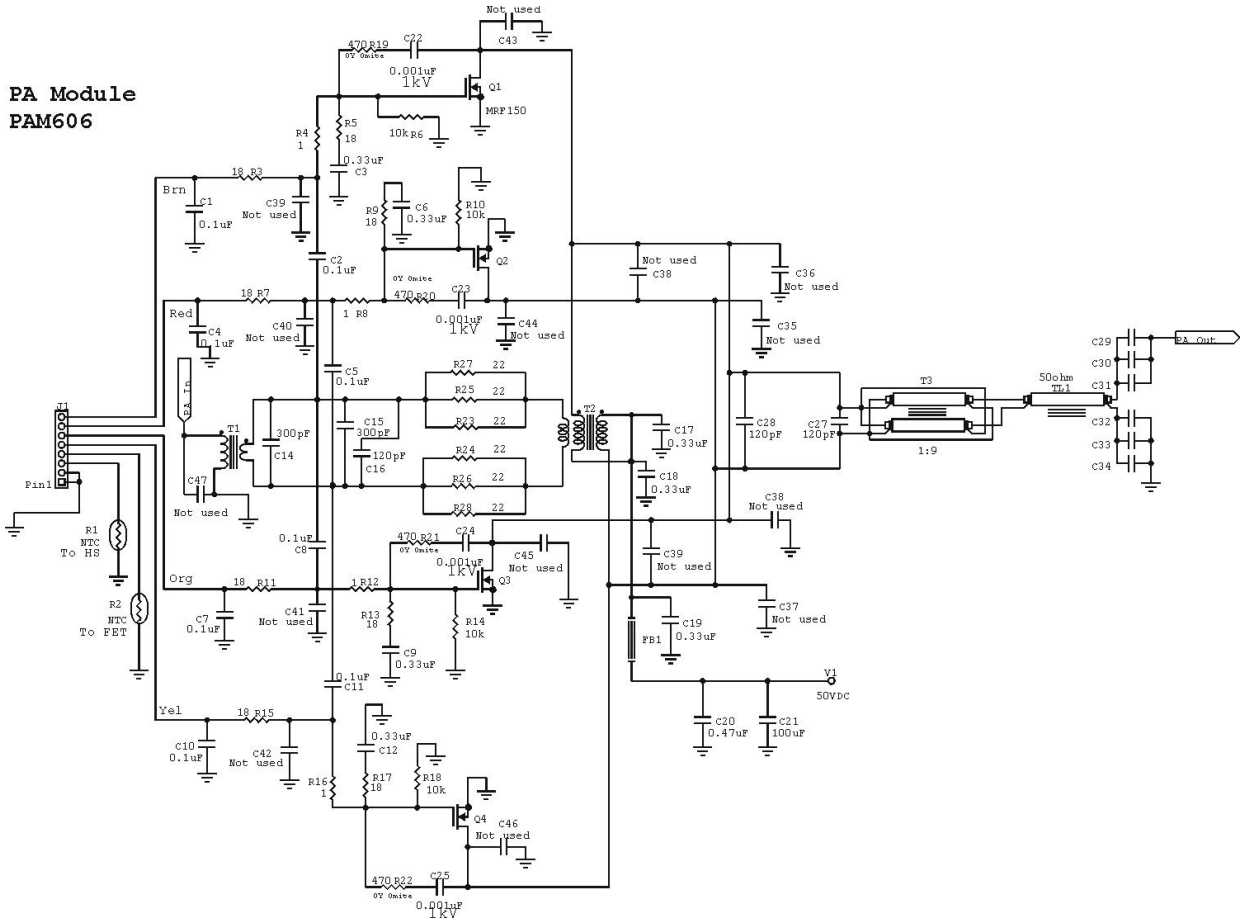

PAM power amplifier module Figure 7

Power Attenuator PD8m

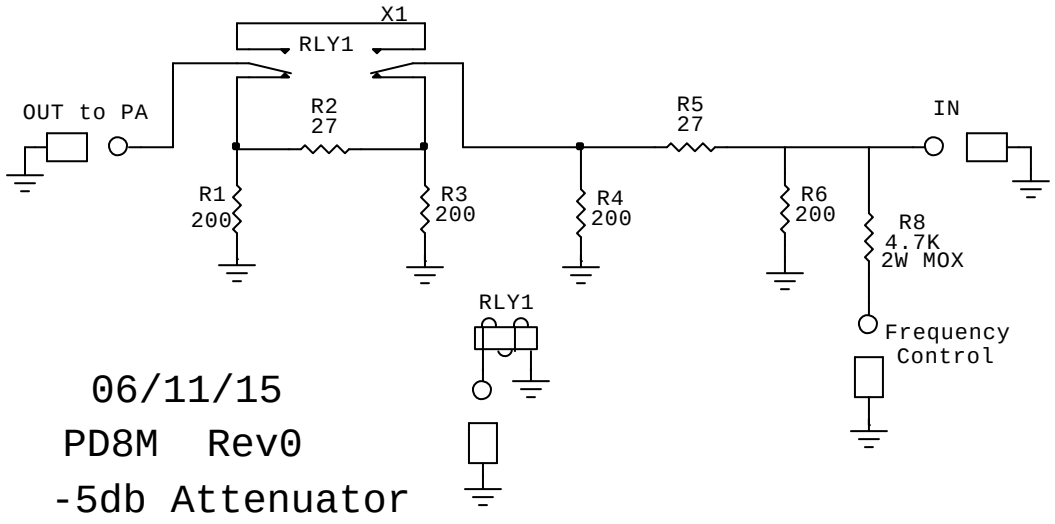

PD8m attenuator Figure 8

Interface Connections RJ45

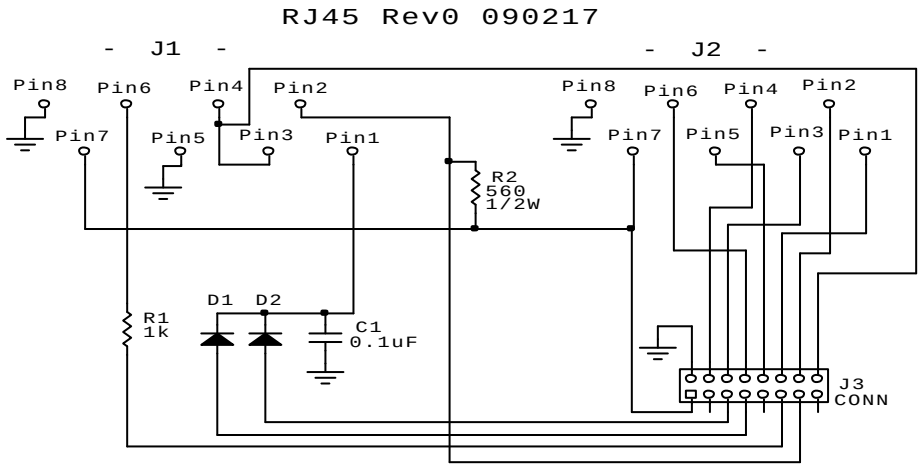

RJ45 interface Figure 9

Relay Board

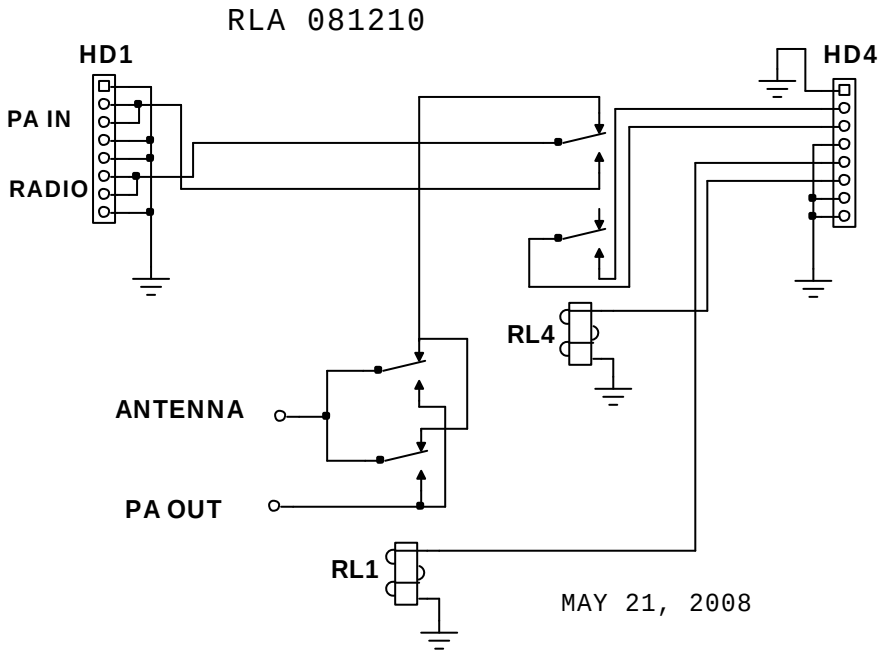

RLY antenna relay Figure 10

Reference figures and drawings

Interconnections Figure 1 17
Amplifier Front Figure 2 19
2KWF6 output filter Figure 3 25
BSW3 bandswitch figure 4 26
CB2 control board Figure 5 28
MB1 alc/metering board Figure 6 29
PAM power amplifier module Figure 7 30
PD8m attenuator Figure 8 30
RJ45 interface Figure 9 31
RLY antenna relay Figure 10 32

Tables

Frequency Limits Table 1 15