AMERITRON ALS-706/S

600 WATT 160-6 Meter NO TUNE
LDMOS-FET AMPLIFIER

INSTRUCTION MANUAL

WARNING!
NEVER APPLY POWER TO THIS AMPLIFIER WITH THE COVER REMOVED!
CONTACT WITH THE POWER SUPPLY VOLTAGES IN THIS AMPLIFIER CAN BE FATAL!

PLEASE READ THIS MANUAL BEFORE OPERATING THIS EQUIPMENT!

AMERITRON
Factory
116 Willow Road
Starkville, MS 39759 USA
662-323-8211

Version 0
Printed in the USA

Contents

Amplifier Features 4
Quick Start 5
Installation and Operation 5
Placement 5
Power Line or Mains Connections 5
Power Mains 5
Radio and Antenna Connections 6
Alerts 7
Operation 8
Introduction 9
General Operation 10
Power Supply and Power Requirements 10
ALS-600PS Power Supply Features 10
ALS-600SPS Power Supply Features 10
Power Line Requirements 11
Power Supply Location 11
Amplifier Overview 11
Installation 12
Installation Clearances 12
Installation Warnings 12
Accessory Equipment and Devices 12
Installation, Wiring, and Connections 13
Safety and Lightning Grounding 13
Station RF Ground 14
Coaxial Line Isolators 14
Front Panel Controls 15
Back Panel Connections 16
Interconnections 17
Optional Radio Interface Cables 18
Operating Frequency Range 19
MARS or CAP Operation 19
Warning Lights 20
Initial Operation 21
ALC Adjustment 22
High Duty Cycle Modes 22
RF Exposure Information 23
ALS-600PS Voltage Settings 25
ALS-600SPS Switching Power Supply 26
ALS-600SPS Voltage Settings 26
ALS-706 Limited Warranty 28

Tables

Table 1 Quick Start Fault Alarms 7
Table 2 Optional Radio Interface Cables 19
Table 3 Band Frequency Ranges 19
Table 4 LED Alarm Indicators 20
Table 5 RF Exposure Distance Chart in Meters 23
Table 6 Approximate Antenna Gain for Some Common Antennas 24
Table 7 ALS-600PS Voltage Settings 25
Table 8 ALS-600SPS Jumper Settings 26

Figures

Figure 1 Basic Interconnection 7
Figure 2 Front Panel 15
Figure 3 ALS-706 Back Panel..... 16
Figure 4 ALS-600PS Jumper Pins 25
Figure 6 ALS-600SPS Board Diagram 26

Manual Version 0 03-22-2021

Amplifier Features

This amplifier provides the following standard features:

- 160 through 6-meter operation, full-power on six meters.
- One conservative linear-service rated 50 volt Dual LDMOS FET transistor.
- New push-pull stripline PA layout with exceptional VHF performance.
- Energy-efficient solid-state design greatly reduces heat, <100 watts power line draw on receive.
- Exceptional harmonic suppression.
- Operational in a few seconds, no long filament warm-up time.
- Clean layout with easy-to-service modular construction.
- Quiet variable-speed forced-air cooling system.
- Power module current and voltage meters with LED illumination.
- Accurate PEP Forward and PEP Reflected output power metering.
- Reflected power protection.
- Thermal overload protection.
- Bandswitch error protection.
- Easy to understand front panel LED indicators for rapid fault-error diagnosis.
- Standard negative-going ALC output with front panel adjustment.
- ALC metering and ALC LED indicator.
- Fully-regulated external switch mode power supply, or linear unregulated supply.
- Compact size 14” deep x 7” high x 9.5” wide.
- Weight amplifier section 15 pounds.

Please read the entire manual completely and understand the operations before trying to operate this amplifier.

Quick Start

Thank you for purchasing this amplifier system. The ALS-706 is a 600 watt nominal PEP output amplifier and power supply system. This amplifier covers 160 to 6 meters. Nominal drive power is 100 watts or less. This system will not and does not operate on the CB band.

The ALS-706 interfaces with most modern amateur radio transceivers, including band data information. Band data connection will require purchasing an Ameritron interface cable for your radio.

Carefully unpack this amplifier and power supply. Cabinets and controls can be broken, bent, or dented with rough handling. Please inspect everything for physical shipping damage; this includes cabinets and chassis. Ameritron does ***not*** package dented or damaged units. If your unit is damaged or dented, including broken knobs or switches, it is always from handling somewhere between Ameritron and the end user. In the event of cabinet damage or broken controls, please retain all packing materials and containers so damage claims can be resolved.

Installation and Operation

Placement

WARNING: Do not block ventilation holes. Do not expose to moisture, water, or external heat.

This unit is two components, a power supply and an amplifier section. The power supply, within limits of cable length, may be placed out of the way. The amplifier section should be in a convenient location within arm's reach of the operating position. Do not extend the amplifier power supply dc power cable.

Power Line or Mains Connections

Power Mains

1.) The system uses one of two power supplies available. The ALS-600SPS switching power supply that can run on 95-130 VAC 50-400 Hz 15A and is well regulated or the ALS-600PS unregulated choke input supply that can run on 100-130 VAC 50-60 Hz 15A.

2.) The plug is a NEMA 5-15P, 120 VAC at 15 amperes. This is a standard USA 120V plug with a safety ground pin. Do not remove the ground pin.

3.) Do not operate with line voltage below 95 or above 135 volts when wired for 120 volts, or below 185 or above 260 volts when wired for 240 volts.

4.) Larger power wiring will not help performance or power unless amplifier high voltage is unstable.

5.) The ALS-706 when using the ALS-600SPS exceeding the safe power supply current on the supply line will force the overloaded supply into shutdown. Shutdown is reset by turning the main power switch off for a brief time. If the

power supply has a permanent overload or the supply has failed, it will not reset. The ALS-600PS uses only the protective fuses.

6.) The ALS-600PS has an RTTY and Normal voltage switch. The RTTY position allows higher amplifier efficiency at reduced power.

See the power supply details included with the particular power supply for details specific to each supply.

Radio and Antenna Connections

WARNING: Forcing connector engagement can result in permanent connector damage. Solder on the outside of center pins or bent pins are primary causes of female connector damage. External solder or bent center pins can permanently damage the female.

1.) RF connections are through standard UHF female connectors. Use good cables with quality UHF male (PL259) connectors. The output cable must safely handle at least 600 watts.

2.) Look at the connectors. The amplifier‘s female connectors have notches on the outer thread edge. The cable males should have protruding tabs on the inner shell beyond the center pin insulator. These tabs and notches prevent unwanted connector rotation. The male’s tab or tabs must be aligned with the female’s notches. This interlocking prevents connector rotation.

3.) With a firm handgrip, gradually tighten RF connectors while making sure the male tab interlocks with the amplifier’s female connector notch. Do not use excessive force on connectors. Check for proper tightness and seating by wiggling and flexing the cables near the connector and watching for any indications of abnormal male connector movement, and by wiggling the cable while hand tightening the male shell. If done properly, the connector will be solidly locked without need for pliers or other tools

4.) ALC and Relay (keying) connectors are phono females. The phono males from external cables should push directly in with a snug fit.

5.) The Relay line has low voltage (<14V) low current (<20 mA). Transmit is enabled by pulling the Relay line to ground with a relay contact or transistor. Read your radio manual. Unless you have a very unusual radio, your radio will directly key the amplifier.

6.) The remote and radio band data connectors are specialized connections. They are for use with Ameritron supplied cables ***only.***

Alerts

This amplifier has front panel alert codes using the SWR, PA, TX, warning LED's and bandswitch band indicators. When a fault code appears, the amplifier is disabled. When an operating problem is corrected, operation is restored and alerts canceled by moving the front panel Standby/Operate switch to Standby.

The following table applies to faults:

Warning Light Steady	Warning Light Flash	Fault	Cause or Cure
SWR	TX	Antenna Reflected Power	High antenna SWR or intermittent antenna or feed line connection
SWR, PA	Band	Wrong filter Filter input SWR	Exciter or amplifier on incompatible band, filter failure
	PA, TX	PA FET too hot	Excessive power for duty cycle or SWR, lack of proper airflow
	10M, PA, TX	Illegal 11 meter operation	Excessive 27 MHz signal level
	REM, PA	No data or bad band data when on remote	Defective or improper remote cable, or bad radio band data information

Table 1 Quick Start Fault Alarms

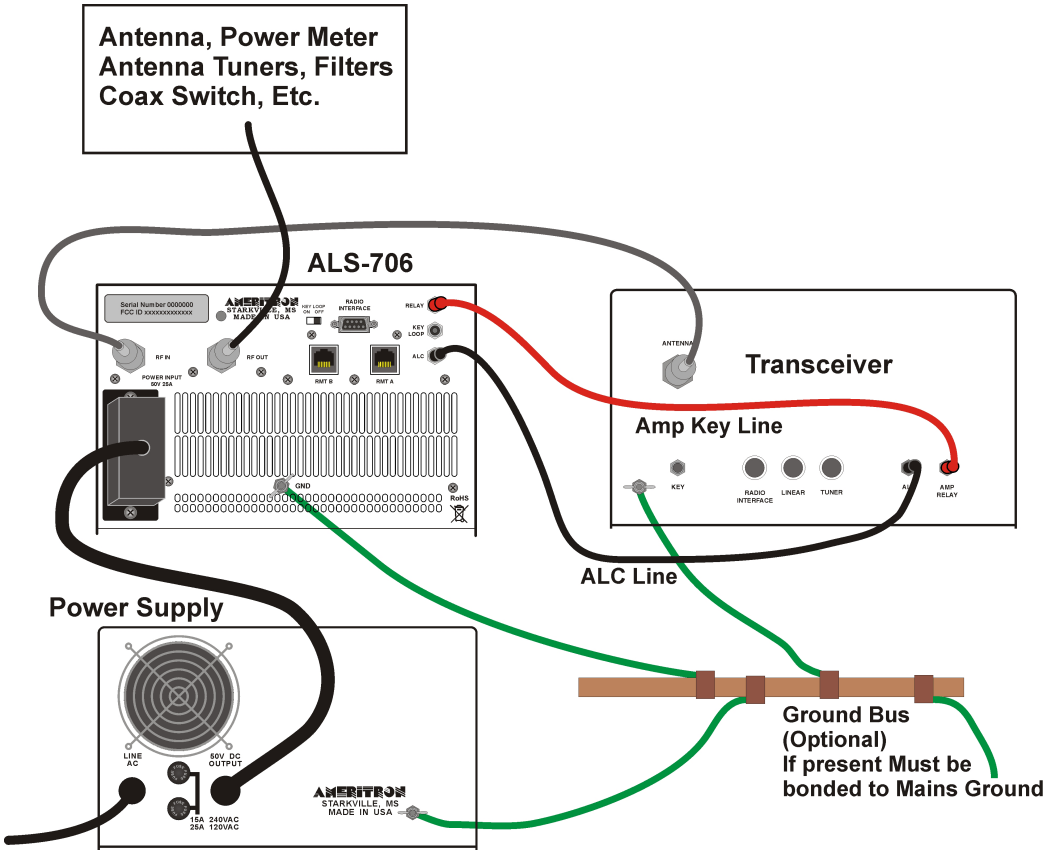

Figure 1 Basic Interconnection

Operation

Before attempting operation:

1. This amplifier is optimized for 50-ohm loads. Be sure your antenna system SWR is as low as possible. As SWR increases from 1:1, either heat or distortion will increase.
2. Be sure your antenna system, including any switches, baluns, matching circuits, or lighting protection devices, are in good condition and will safely handle high power.
3. Connectors, cables, and antennas must not have loose connections or insulation failure issues.
4. Your exciter must be adjustable to significantly less than 100 watts output. Start at 50 watts maximum drive power and increase or decrease drive to reach desired power. Do not exceed 25 amperes or 600 watts output, and do not drive into non-linearity on SSB. A trapezoid scope pattern is recommended for drive adjustment. Overdriving results in an excessively wide signal, and overdriving can damage the amplifier.
5. Power mains should be reasonably stable and match power supply voltage wiring.
6. The low pass filters cut off just above the traditional primary amateur bands. A primary band's filter is used on the next lower WARC band. For example, the 20-meter low pass filter is used on 30 meters. Some radios do not supply enough band data to know the exact band. With these radios, amplifier band data displays the ***next higher*** primary band above the radio's WARC band. If you are using such a radio, do not be alarmed if 15 meters illuminates when the radio is on 17 meters. This is still the correct filter.
7. The amplifier will shut off with an incorrect band selection, high antenna SWR (even for an instant), if safe thermal limits are reached, or with catastrophic failures.
8. The ALS-706 reads peak envelope power on forward and reflected RF power scales.

With proper installation, basic operation is straightforward:

1.) Set the bandswitch to the desired band. This happens automatically in the REM position with a suitable radio interface cable.

2.) Set the exciter or transceiver to the desired power below 100 watts.

3.) Place the Standby switch in the Operate position.

4.) Transmit, and watching Forward Power metering, be sure power does not exceed 600 watts on peaks.

5.) For high duty cycle modes and long transmissions, reduce the power. The amplifier will shut down if the FETs reach the maximum safe temperature limits.

Introduction

Thank you for purchasing this amplifier system.

The ALS-706 is a compact 600 watt nominal PEP output amplifier. It uses an external power supply system. This amplifier covers 160 to 6 meters. Nominal drive power is 100 watts or less. NOTE: **This amplifier excludes all operation between 26 and 28 MHz.**

Caution: This amplifier has an FCC mandated automatic disconnect and other features preventing 27-MHz operation**. There is no available circuitry or control provision to circumvent this lockout.**

The ALS-706 interfaces with most modern amateur radio transceivers. Supported band data input includes ICOM compatible analog voltage, Elecraft and Yaesu BCD band data, and Kenwood serial data. With proper interface cables and data, this amplifier will automatically change bands in step with transceiver band changes. Automatic band selection using a band data port or band decoded bus requires purchasing an Ameritron interface cable for your radio.

Carefully unpack this amplifier and power supply. Please inspect everything for physical shipping damage; this includes cabinets and chassis. Ameritron does ***not*** package dented or damaged units. Cabinets and controls can be broken, bent, or dented with rough handling. If a new unit arrives mechanically damaged, including broken knobs or switches, it is *always* from handling somewhere between Ameritron and the end user. In the event of cabinet damage or broken controls, please contact the dealer immediately. To permit claim processing, retain all boxes and packing materials.

The Ameritron ALS-706 is 600-watt nominal output, 160 through 6 meter amateur radio band, solid-state amplifier. The ALS-706 uses one MRFE6VP5600HR6 dual LDMOS field effect transistor. The LDMOS FET is specifically designed for broadcast power amplifier applications and is specified to handle up to 65:1 SWR under full power. Fan speed is regulated by temperature sensors; assuring conservative cooling with minimal noise.

Nominal driving power is 80-100 watts for 600 watts output (approximately 9-10 dB gain) on most bands. The compact 9-1/2” wide by 7” high amplifier package (depth only 14”) fits nearly any station configuration. This attractive desktop amplifier unit weighs approximately 15 pounds.

An external 50-volt 25-ampere CCS power supply powers the ALS-706. Two different supplies are available. The ALS-600SPS switching regulated supply and the ALS-600PS unregulated supply. These supplies operate on all standard residential power line voltages.

Please read the manual completely and understand the operations before trying to operate this amplifier.

General Operation

Power Supply and Power Requirements

ALS-600PS Power Supply Features

- Normal operating range is from 100 volts up to 130 volts 50/60Hz (12 amperes typical full carrier power) or between 200 and 250 volts, 50/60Hz (6 amperes typical at full carrier power).
- A unique “buck-boost” winding allows compensation for up to six different power line voltages centered on 115 and 230 volts. This versatile Ameritron feature maintains optimum voltages on the amplifier components for maximum performance and life
- The ALS-600PS standard power supply uses an input choke to provide low power factor loading on power lines. This reduces the peak currents drawn from the line and improves the voltage regulation of the supply. This makes the ALS-600PS generator and inverter friendly within the acceptable power line frequency range of 50 to 60 Hz
- Step-start to limit stress on power supply components
- An illuminated cross-needle meter monitors the 50V line output voltage and current
- Weight 33 lbs.

ALS-600SPS Power Supply Features

- Efficient operation from 100-130 volts ac (12 amperes typical at full output power)
- Low standby and receive power drain, typically less than 100 watts
- Generator and inverter friendly with acceptable power line frequency range 40 to 400 Hz
- Inrush protection
- Fully-regulated current-limited outputs
- Excellent voltage regulation
- Exceptional filtering and RFI suppression eliminates receiver birdies common to most SMPS
- Light weight 13 lbs.
- An illuminated cross-needle meter monitors 50V line output voltage and current.

The ALS-706 external power supplies contain 14 volt positive and negative supplies, as well as a 50-volt 25-ampere continuous (30-ampere peak) main supplies. The ALS-706 PA (power amplifier) module operates from 50 volts, giving a total dc supply rating of 1250 watts average power and 1500 watts peak dc power. The 14 volt supplies are for illumination, bias, and control functions.

Power supply to amplifier interconnections are through a heavy-duty cable using reliable Cinch Jones connectors.

Power Line Requirements

This amplifier ships wired for a nominal mains voltage of 120 VAC with either supply. Maximum power line current at full power output is 12 amperes at 120 volts. 250-volt rated 15-ampere fuses protect the power line. ***Always use 125V or 250V line fuses.*** The linear supply requires changing taps for different line voltages. The switching power supply is voltage regulated, current limited, and automatically adapts to any mains voltage between ~95 VAC and 135 VAC. The ALS-600SPS switching supply does not require adjustments or voltage tap changes for 125VAC use.

Note: 240 volt power mains operation is possible. This will not normally increase power. Because average power is very low, SSB operation is generally unaffected by 120 or 240 volt operation. 240V fuse size is 8 amperes maximum, fast blow only. The fuse must have a voltage rating of 250VAC

Power Supply Location

Locate the power supply in a ventilated area convenient to the amplifier location. Avoid placing the power supply next to sensitive equipment, such as audio processors, transceivers, or microphones. For safety, ground the wing nut stud on the supply rear to the station ground bus. The station ground bus should comply with National Electrical Codes. NEC safety and fire protection codes mandate direct bonding of station grounds to the home power line entrance ground. Station ground rods not directly bonded with a low impedance connection to utility entrance grounds will increase equipment or property damage, and increase personal risk, significantly.

Amplifier Overview

The Ameritron ALS-706 is a solid-state, 600 watt nominal RF output power, 1.8 to 54 MHz amplifier. The ALS-706 meets or exceeds all FCC requirements governing amateur radio external power amplifiers.

The ALS-706 uses one low-distortion MRFE6VP5600HR6 dual LDMOS RF power transistors in push-pull configuration. Ameritron recommends running 600 watts or less peak power for maximum linearity and component life. It is always a good idea to use an oscilloscope to verify proper linear SSB operation.

Protection circuitry reduces the power as the transistor approaches conservative thermal limits, and disables the amplifier before exceeding safe transistor operating temperature limits. (See warning table.) A fan speed-control system monitors heatsink temperature.

Room temperature amplifier bias is nominally 2A. Amplifier supply voltage is nominally 50 VDC. Maximum allowable voltage is 58 volts.

Harmonic suppression comes from push-pull operation of linear devices, followed by 5-pole low-pass filters. This amplifier uses modern multi-layer high voltage chip capacitors where applicable. Chip capacitors, due to low internal inductance and higher Q, offer significantly improved harmonic suppression. Harmonic and spurious suppression is excellent; external low-pass filters have minimal effect on TVI. The most likely cause of any RFI or TVI will be fundamental overload from inadequate consumer device RFI immunity.

The T/R “Relay” control jack is well within the range of almost any transceiver or radio. The “Relay” jack has an open circuit voltage of approximately 14 volts, and closed circuit current less than 15 mA. Virtually any modern amateur radio will directly key this

amplifier. Relay switching time is approximately ten milliseconds. Radio adjustable TX delay should be set to 10 mS.
This amplifier includes full metering using a large easy-to-read conventional cross-needle panel meter. The meter reads all critical parameters, including Forward and Reflected peak envelope RF power, voltage and, current.

Installation

Please look your amplifier and power supply over carefully. Observe the air inlet and outlet ventilation holes. Facing the amplifier front panel, the cooling air inlets are on the top left and lower right side, including the right hand side cabinet bottom. Warm air exits vents at the cabinet rear.

While outlet air will not be particularly hot, it is never a good idea to have warm air blow into heat sensitive equipment, such as transceivers or other power amplifiers. Have the same consideration for your new amplifier and power supply. Be sure air inlet temperature is not substantially above normal room temperature. Ideally, the air inlet temperatures should be below 32°C or 90°F, although temperatures up to 41°C or 106°F are permissible. Should ambient temperatures exceed these limits, it might become necessary to reduce duty cycle or power.

***Warning:* Do not block cooling air inlets and outlets!**

Never expose the amplifier to excessive heat, dirt, water, or mist.

Installation Clearances

The amplifier must have a clear area to the bottom, both sides, and top for proper airflow, and to the rear for exhaust air and interconnection wiring. It is especially important to avoid obstructions that block the air inlet on the top left, as well as both lower sides. One to two inches clearance is normally adequate for full ventilation. Keep any papers or loose objects that might impede airflow away from the air inlets and outlets.

Locate the amplifier and power supply away from sensitive equipment such as microphones, audio processing equipment, or low level audio or radio frequency amplifiers. Generally, the best location for the power supply is below the operating desk and away from antenna feedlines. This will minimize unwanted mechanical, acoustical, and electrical coupling.

The power supply produces very little heat, but the air inlet and outlet must remain open to normal room temperature air.

Installation Warnings

Accessory Equipment and Devices

Second to operator error, the most common amplifier failure or erratic fault protection shutdown is from antenna switches, lightning protection devices, or baluns with lightning spark gaps in high SWR coaxial lines. Do not use 50-ohm lightning protection devices on lines with high SWR, such as between and antenna and antenna tuner. High SWR can raise the RF voltage to above the voltage limits of the protection device so that it arcs over. Be sure any lighting protection devices are in good working order and is rated above the power level of the amplifier.

Installation, Wiring, and Connections

The ALS-600SPS switching power supply is factory wired for 100-130 VAC. The linear ALS-600PS is prewired for 120-125 VAC nominal voltage. Both use standard NEMA-5-15P 15 ampere 120-volt plugs. The round center pin is the safety ground. Do not remove the safety ground.

CAUTION! ***Before*** connecting the power supply to an electrical outlet, always be sure you have completed the following four steps:

1. **Insert the <u>15 ampere 250V fuses</u> into the two black fuse caps.**
2. **Insert the fuse and cap assemblies into the power supply's fuse holders. The fuses lock in place with a push and slight turn.**
3. **Connect the power supply to the amplifier.**
4. **Be sure the amplifier power switch is *off*.**

Caution! Fuses have both voltage and current ratings. Use only 250V rated fuses in this device. The voltage rating is generally marked on fuses. DO NOT use automotive-type low voltage fuses in any power line application. See power supply instructions.

Warning: Never insert the power supply cord into the outlet until you have completed steps 1 through 4 above!

Position the amplifier at or near the desired location on your operating desk so you have access to the rear panel, and connect the rear panel cables. **Do not connect the power mains at this time!**

Safety and Lightning Grounding

The power supply cabinet grounds through a safety ground pin on the power plug. This system depends on a properly wired power outlet.

Lightning protection grounds do very little good at the operating desk. Lightning protection grounds belong at the antenna cable entrance to the building. Station ground rods ***must always*** electrically connect through low impedance and resistance conductors to the power line entrance ground. The national electrical code in the USA prohibits isolated ground systems at dwelling entrances. ***Isolated*** ground rods or systems connected to conductors entering a dwelling increase the damage likelihood during storms, and increases fire hazard and shock risk.

RF grounds generally belong at the antenna or at the feed line entrance. With the special exception of a small floating counterpoise grounds, RF grounds at or very near the dwelling should bond into the mains ground outside the dwelling. This is especially true with earth contact grounds.

There is a ground lug on the amplifier rear panel. This ground lug provides a convenient chassis connection for operating positions with ground bus on the desk. A station ground bus helps ensure desk area equipment cabinets are close to the same electrical potential for radio frequencies and lower. Equipment ground lugs are ***NOT*** for independent wires or connections to external ground rods or ground systems from each

piece of equipment. They are for connection to a desktop ground bus system common to all equipment, if you prefer to use such a system.

Independent ground wire connections are counterproductive. Never use RF isolators between the amplifier and radio. Never use long independent wires to external grounds. Never connect desk equipment to ground rods that do not bond into the mains entrance ground rod.

Station RF Ground

Common rumor is a station equipment ground reduces RFI (radio frequency interference), reduces lightning damage, or improves signal levels. Generally, changes in RFI or signal quality, with the addition or removal of a station ground, indicate an antenna or feed line installation problem. Typical problems causing desktop RF problems include the following:

- Lack of suitable baluns.
- Improper feed line routing near antennas, or improperly designed antennas.
- Antennas too close to the operating position.
- Poor equipment cabinet design, such as non-bonded or grounded equipment covers or panels.
- Poorly designed low-level audio line shield entrances, such as shields allowed to enter cabinets instead of grounding at the enclosure entrance.
- Improper antenna feed line building entrance, lacking a properly grounded entrance panel.
- Rather than patching a system problem at the desk, it is much better to correct the actual problem source.

Coaxial Line Isolators

The goal of every operating position is to maintain all equipment cabinets and housings at the same RF potential. Never install coaxial line isolators between desktop radio equipment. Isolators on or near the desk are contrary to this goal, and actually promote or encourage RF potential differences between different desk equipment. If an RF problem appears at the operating position, correction, repair, or replacement of defective equipment is in order.

Proper line-isolator installation points are either just outside the operating room entrance and/or close to the problem's actual source. If the antenna system has excessive common mode current on feedlines, the desktop has defective cables or connectors, or if equipment has poor equipment cabinet design such as poor cover bonding to chassis, locate and correct the actual problem.

Front Panel Controls

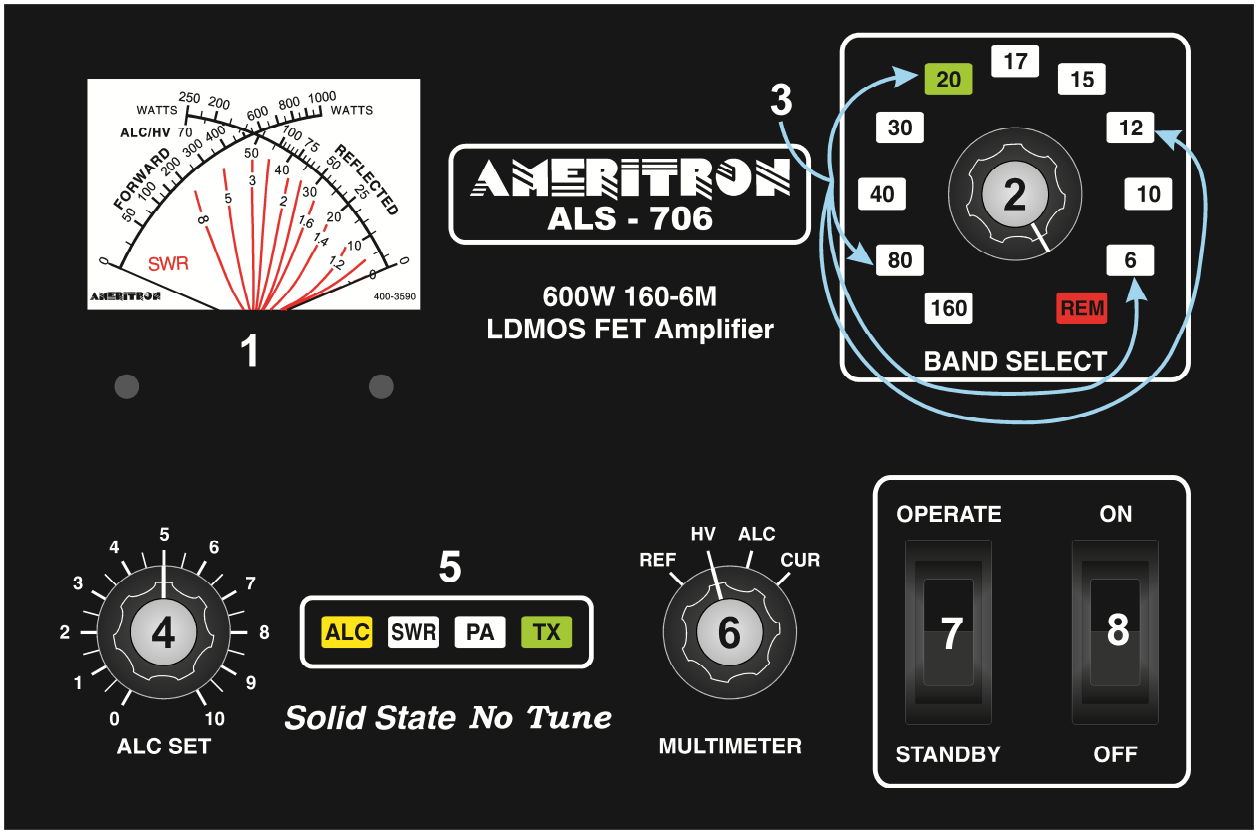

Figure 2 Front Panel

The front panel contains the following indicators and controls. To prevent damage, become familiar with the front panel ***before*** operating the amplifier.

1. **MULTIMETER** Right scale FET Module Current, Voltage, ALC, and Reflected Power. Left Scale Power Output. Multimeter (reflected power, module voltage, ALC, or module current) selected by control 6.
2. **BAND SELECT** or REMote selector knob.
3. **BAND INDICATOR** or REMote backlit LED indicators, also warning if flashing.
4. **ALC SET** limit adjustment.
5. **ALARM INDICATORS** ALC, High SWR, PA Fault, and Transmit on.
6. **MULTIMETER SELECTOR** switch.
7. **OPERATE/STANDBY** switch, also resets fault warnings.
8. **MAIN POWER** switch, also resets power supply overload.

The meter's left scale-arc (Figure 2, ref 1) continuously indicates forward peak envelope power (PEP) output directly in watts. PEP has no fixed relationship to long-term average power except, for constant amplitude carriers like a steady CW carrier, when PEP and average powers are equal. PEP is the highest average power during one (or more) radio frequency cycle(s) at the modulation envelope crest.

The meter's rightmost scale-arc indicates PEP reflected power in watts on the upper scale numbers and pickets. Notice power meter calibrations are not evenly spaced. Lower scale numbers and pickets are evenly spaced, and are for all other functions. The lower right scale is used for relative ALC setting, power amplifier module voltage (0-70 volts), and power amplifier current (0-70 amperes). Nominal voltage is 50 volts; maximum safe current is 25 amperes. Maximum safe output is 600 watts peak; maximum safe peak reflected power is 125 watts.

Back Panel Connections

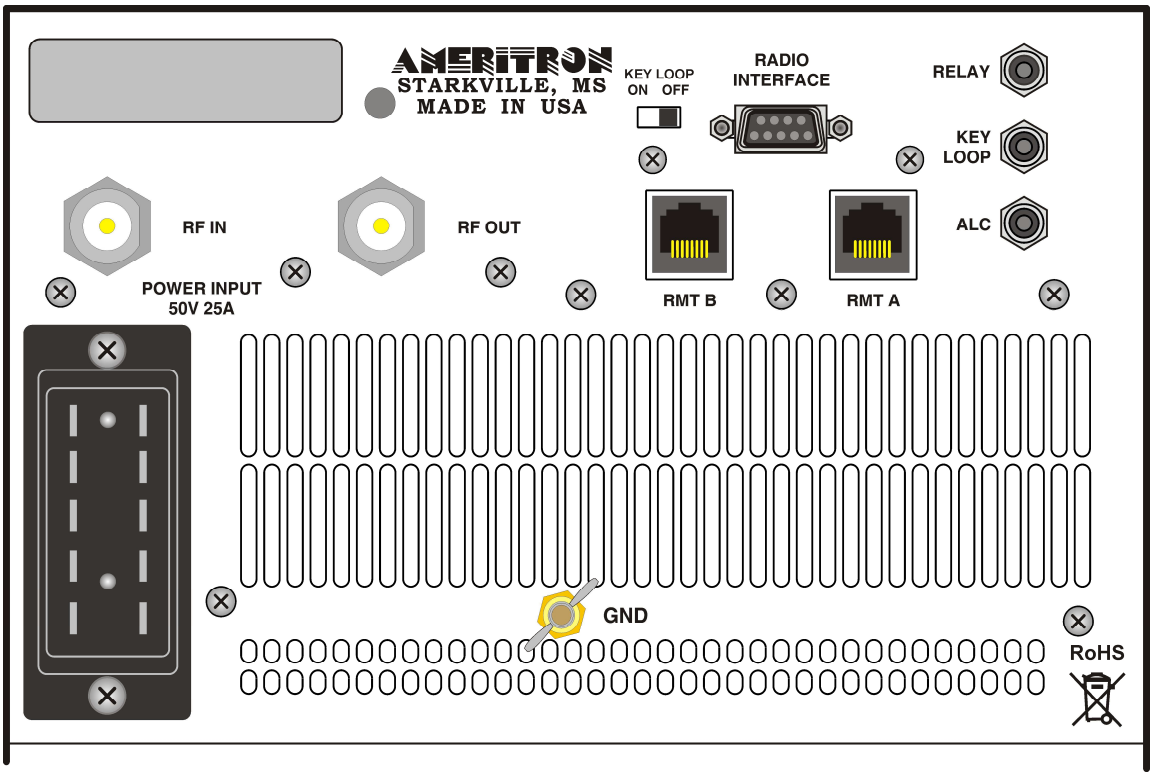

Figure 3 ALS-706 Back Panel

POWER INPUT

The power supply must be unplugged from the power mains before installing or removing this connector. This connector is indexed by a slight vertical offset in the two round index pins. Observe spacing offsets to correctly mate the pins. Seat the male plug fully onto the amplifier rear panel male connector pins. After seating, the power supply can be plugged into the AC mains outlet.

ALC

Optional connection. Connects to radio ALC input and provides power limiting.

RELAY

Connect to radio amplifier keying line. Radio must pull this 14-volt 15-mA line below 1-volt to transmit.

GND

Connect to station ground bus, if available. This connection is primarily for extra safety.

RF IN

Connect through good 50-ohm coaxial cable of any reasonable length to radio's antenna output connector. This can be a smaller cable, such as RG-58/U, and should not be needlessly long.

RF OUT

To 50-ohm antenna, antenna tuner, or power meter. This is the high power output. 50-ohm coaxial cable and system beyond this connector must safely handle at least 600 watts.

RADIO INTERFACE

This connector is for use with ***Ameritron*** radio interface cables. It allows automatic band selection (following the radio). It also provides amplifier actuation in transmit mode with some radios.

REMOTE

These RJ45 connectors are for an Ameritron remote control head, or remote operation with an interface box. They provide access to controls, including most metering functions.

KEY LOOP

Key loop switch and jack are for use with certain automatic antenna tuners. Instructions will be in tuner manual. Key Loop switch must be off when using remote cable unless using this jack.

Interconnections

1. If you use a desktop grounding bus system, connect the station ground bus to the amplifier's rear panel wing nut. National safety codes require the station ground electrically bond to the power mains safety ground at the building entrance. Do not connect the amplifier to its own isolated ground rod or ground system.
2. Connect the power supply to the amplifier.
3. Connect the RELAY line to the transceiver's amplifier control port. This port is usually described or defined in the amplifier interfacing section of the radio or transceiver manual. This port must pull low for transmit, and be open circuit when receiving. Relay control voltage from the ALS-706 is 14 volts positive with only 15 mA current. You should always check your transceiver's manual, but almost any standard transceiver directly interfaces with this amplifier.
4. Connect the RF OUT (output) port to the appropriate point in your station. This is the high power RF output cable. This connection would go to your 600-watt rated Power/SWR meter, antenna, or antenna matching device. Good quality Mini-8 or RG-8X cables are acceptable for anything but RTTY use, although larger RG-8 style cables are normally preferred. ***Your antenna matching system, or antenna tuner, must connect to this port.***

5. Connect the IN connector to your transceiver. Do not install any active antenna matching devices on this port. In general, the shortest and most direct cable connection is best, although high quality cables can be very long without adverse effect on performance. RG-58/U or Mini-8 (RG-8X) style cables are acceptable. ***You should never use a tuner of any type on the amplifier input, nor should you drive this amplifier with over 100 watts peak envelope power.***
6. The ALC line is optional. In general, transceiver internal ALC is all that is necessary. The ALC monitors the RF output power and reflected power supplied by the ALS-706 to the load.
7. Operate the bandswitch manually during initial testing. Do not connect band decoders, band data lines, or computer interfaces until initial tests are completed and the amplifier is functioning normally.
8. When using an automatic antenna tuner that has the capability to inhibit the amplifier from operating either during tuning or when conditions are outside of the tuner's capability; and when the Radio Interface Cable that has the Amplifier Relay line included (not using the RELAY jack); the KEY LINE can be used. The KEY LOOP Switch is used to route the key signal from the interface to the amp directly or out the KEY LOOP jack.
    a. If the KEY LOOP is not used, set the KEY LOOP Switch to OFF so the Radio Interface Cable can key the amplifier.
    b. If the KEY LOOP is used with an automatic antenna tuner switch the KEY LOOP Switch to ON, run a cable from the KEY LOOP connector on the amp to the AMP ENABLE IN connector on the tuner, and run a cable from the AMP ENABLE OUT connector to the RELAY connector on the amp.

Optional Radio Interface Cables

ALS-706/ALS-1406/ALS-1306/RCS-12 Radio Interface Cables available from Ameritron.

Model No.	Description	Notes
DB-13D	ICOM with ACC, 13-Pin DIN	
DB-7DI	ICOM with ACC 2, 7-Pin DIN	
DB-DB7DK	Kenwood with DB9 (except TS-480)	**SET Baud RATE 9600** **TS-590** menu 53 (HF) 54 (50 MHz) #2, **TS-570** menu 39 (HF) and 40 (50 MHz)#2 **TS-990** s menu 11 (HF) and menu 12 (50 MHz) set to 3= active high+relay+delay **TS-2000** menu 28A #2
DB-DB8MK	Kenwood TS-480	Baud rate 9600, menu 28 (HF) channel 2 and 29 (50 MHz) channel 2
DB-8MY2	Yaesu FT-897/857/817/840/890/990/100	
DB-8DY	Yaesu with standard 8-Pin DIN Band Data	
DB-10MY	Yaesu FT-450/950/1200	
DB-DB15Y	Yaesu FT-DX3000	
DB-DB15HE	Elecraft	

Table 2 Optional Radio Interface Cables

Operating Frequency Range

This amplifier covers all Amateur Radio frequencies below 54 MHz, as restricted by FCC or your local governing authority. Once you have established proper connections, please set the amplifier BAND SELECT control (Fig. 2, ref 3) to one of the following bands:

Band	Frequency Range	Notes
160	1.8 – **2.3** MHz	
80	3.0 – **5.0** MHz	
40	5.0 – **9.0** MHz	
30	9.0 –**14.5** MHz	USA 30-meter power limit 200 watts
20	9.0 – **14.5** MHz	
17	14.5 – **22.0** MHz	
15	14.5 – **22.0** MHz	
12	22.0 – **30.0** MHz	Amplifier automatically disables above 26 MHz
10	22.0 – **30.0** MHz	Amplifier automatically disables below 28 MHz
6	50.0 – **54.0** MHz	

Table 3 Band Frequency Ranges

Caution: This amplifier has an FCC mandated automatic disconnect and other features preventing 27-MHz operation**. There is no available circuitry or control provision to circumvent this lockout.**

MARS or CAP Operation

For licensed amateur radio operators participating in Military Affiliate Radio Systems or Civil Air Patrol, this amplifier is suitable for use on all frequencies between 1.8 and 54 MHz with some precautions. The amplifier will not function between 26 and 28 MHz due to the required lockout. The upper frequency limits are in bold type in the table above. Do not operate above the bold-type frequency limits in the table above because PA (power amplifier) or filter damage may occur.

This amplifier has significantly cleaner output purity than FCC part 97.307 requirements when operated ***inside*** all ***amateur bands*** listed in the table above. Ameritron does not guarantee harmonic suppression or operation in applications outside standard amateur radio bands.

Most non-amateur services prohibit use of non-commercial radio equipment. This amplifier automatically prevents operation between 26 and 28 MHz. Operation in the 26-28 MHz range is not available with this product, irrespective of licensing or end-use.

Warning Lights

The ALS-706 has two primary warning lights in the center of the front panel, SWR and PA. When SWR or PA warnings illuminate from an operating fault the amplifier defaults to a forced bypass mode. Operational faults and the forced bypass are reset by placing the amplifier in standby.

ALC: The yellow ALC light is at the far left of the warning light cluster, next to the ALC control. The yellow ALC light is not a fault indicator. The ALC light indicates ALC output. Occasional flashing is normal with properly adjusted ALC. An almost steady ALC light generally indicates too much ALC.

TX: The TX indicator illuminates steady green when the amplifier is “keyed” or in the transmit mode.

The SWR and PA indicators serve exclusively as warnings. The SWR and PA, in conjunction with TX and Band indicators, flash in certain “codes” to indicate severe operational problems.

The following table applies to faults:

Warning Light Steady	Warning Light Flash	Fault	Cause or Cure
SWR	TX	Antenna Reflected Power	High antenna SWR or intermittent antenna or feed line connection
SWR, PA	Band	Wrong filter Filter input SWR	Exciter or amplifier on incompatible band, filter failure
	PA, TX	PA FET too hot	Excessive power for duty cycle or SWR, lack of proper airflow
	10M, PA, TX	Illegal 11 meter	Excessive 27 MHz signal level
	REM, PA	No data or bad band data when on remote	Defective or improper remote cable, or bad radio band data information

Table 4 LED Alarm Indicators

Initial Operation

For personal and equipment safety, double-check all wiring and connections () before turning power on. After verifying all power supply and amplifier connections, follow the procedures below:

Place the **MULTIMETER** switch (fig. 2, ref. 6) in the **HV** position. The multimeter is the right-side scale on the panel meter (fig. 2, ref. 1), and reads on the 0-70 right scale bottom. Find 50 on the scale. HV reading should be approximately 50 volts whenever the amplifier is ON. Any voltage above the Forward arc crossing is unsafe.

Place the **ALC SET** control (fig. 2, ref. 4) full clockwise (10 on knob scale). This sets ALC to engage at maximum possible power, which effectively will disable the ALC for initial testing.

With the **STANDBY/OPERATE** switch (fig. 2, ref. 7) on **STANDBY**, turn the power switch (ref. 8) **ON**.

There will be a short delayed “click” from the power supply. **HV** (fig. 2, ref. 1) should immediately rise to near full scale after the “click”. The meter and the appropriate **BAND** LED (fig. 2, ref. 3) should illuminate.

The multimeter’s **HV scale** (fig.2, ref 1, lower right scale arc) should indicate approximately 50 volts. Any voltage above the Forward arc crossing is unsafe.

Rotate the **BAND** switch (fig.2, ref 2 and 3) through all positions. The appropriate **BAND** LED will illuminate, band-filter relays will audibly switch when moving between 160 and 80 meters, 80 and 40 meters, 40 and 30 meters, 20 and 17meters, 15 and 12 meters, and between 10 and 6 meter selector positions. There should be no filter change moving between 30 and 20, 17 and 15, or 12 and 10-meter selections since these band groups share a common filter in each pair.

Set the **BAND** switch (fig. 2, ref. 2) to a band where you have a good 50 ohm high-power load connected.

Change the meter switch (fig. 2, ref. 6) to **REF**. In this position, the multimeter indicates PEP reflected power.

The next objective is to have a steady unmodulated low-power carrier. With no modulation in the FM, AM, RTTY, or CW mode, and with the amplifier still on standby, adjust the exciter’s power to about ten watts. Verify your radio is supplying reduced power, ideally around 10-20 watts carrier (not critical), and that VSWR of ***the antenna system*** or load is low. There should be almost no deflection on the reflected power scale (Figure 2, ref. 1) with the **MULTIMETER** switch in the **REF** position. If the meter indicates noticeable reflected power, check the RF cables or antenna system.

Reminder: You cannot use a tuner in your radio or between your radio and this amplifier to match the antenna system. Any antenna matching must be between the amplifier and the antenna, and the antenna tuner and everything else connected beyond the amplifier must conservatively handle 600 watts of both carrier and peak envelope power.

- Place the amplifier in **OPERATE** position (fig. 2, ref. 7). Be sure the amplifier **BAND SELECT** (fig. 2, ref. 3) matches the band selected on the transceiver.
- Place the transmitter or transceiver into transmit in FM, AM, RTTY, or CW modes. The green **TX LED** (fig. 2, ref. 5) should light. The Forward power scale (fig. 2, ref. 1) should increase to very roughly ten times the initial exciter power reading. Reflected power should remain very low, and the PA current should increase on the right meter 0-70 scale (fig 2, ref. 1) when in the Id Multimeter position. Only the **TX** and **BAND SELECT LED's** should illuminate.
- Briefly, increase exciter power until the amplifier reaches 600 watts output, or increase power until the exciter reaches maximum power without exceeding 600 watts amplifier power. Watch the **Id MULTIMETER** position on the right meter 0-70 scale, and never exceed 30 amperes. Target **Id** reading is 25 amperes or less.
- After verifying all of this, and understanding control locations and function, the amplifier is ready to operate.
- This amplifier produces approximately 600 watts PEP output power with approximately 70-90 watts PEP drive. This is nominal power, and can vary slightly from band-to-band.

ALC Adjustment

It is unfortunate, but radio manufacturers do not have standardized interfaces. Because of this, ALC requires some initial adjustment. If the ALC voltage is too low, the ALC will not provide good control of power levels. If the ALC loop gain is too high, the ALC can cause a "power bounce" as power attempts to settle at the desired ALC power threshold. This overshoot, dip, and recovery is caused by slow radio ALC response time. Excessive ALC control loop gain aggravates power bounce.

ALC attack bounce shows on a steady carrier (such as RTTY, CW, or FM) as a high initial peak power reading followed by a deep null. The deep null is followed by a slow settling to the desired power level. On SSB, it will show as a slow warble or modulation of power levels, especially at the very start of voice transmissions.

If ALC attack bounce is observed, the ALS-706 will require ALC gain adjustment. The ALS-706 has a small flat-blade screwdriver adjustment for setting ALC gain. This adjustment is accessible through a small hole located on the left cabinet side behind the front panel, near the panel meter.

High Duty Cycle Modes

When operating the amplifier with high duty cycle modes such as FM, RTTY, FT8, or other digital modes reduce the power input so the output is less than 600W and the PA current is less than 20A. Also if the thermal cutout trips very often reduce the power to eliminate temperature cutouts.

RF Exposure Information

			100W		600W		1200W	
BAND	Frequency MHz	Antenna Gain dBi	Controlled Distance in Meters	Uncontrolled Distance in Meters	Controlled Distance in Meters	Uncontrolled Distance in Meters	Controlled Distance in Meters	Uncontrolled Distance in Meters
160M	2.000	0	0.1	0.3	0.3	0.7	0.4	1.0
		3	0.2	0.4	0.4	1.0	0.6	1.4
		6	0.2	0.6	0.6	1.4	0.8	1.9
80/75M	4.000	0	0.4	0.8	0.9	2.1	1.3	2.9
		3	0.5	1.2	1.3	2.9	1.8	4.1
		6	0.8	1.7	1.8	4.1	2.6	5.8
		9	1.1	2.4	2.6	5.8	3.7	8.2
40M	7.000	0	0.7	1.5	1.6	3.6	2.3	5.1
		3	0.9	2.1	2.3	5.1	3.2	7.2
		6	1.3	2.9	3.2	7.2	4.5	10.2
		9	1.9	4.1	4.5	10.2	6.4	14.4
30M	10.150	0	1.0	2.1	2.3	5.2	3.3	7.4
		3	1.3	3.0	3.3	7.4	4.7	10.4
		6	1.9	4.3	4.7	10.4	6.6	14.8
		9	2.7	6.0	6.6	14.7	9.3	20.8
		12	3.8	8.5	9.3	20.8	13.2	29.4
20M	14.350	0	1.3	3.0	3.3	7.4	4.7	10.5
		3	1.9	4.3	4.7	10.4	6.6	14.8
		6	2.7	6.0	6.6	14.7	9.3	20.9
		9	3.8	8.5	9.3	20.8	13.2	29.5
		12	5.4	12.0	13.2	29.4	18.6	41.6
17M	18.168	0	1.7	3.8	4.2	9.4	5.9	13.2
		3	2.4	5.4	5.9	13.2	8.4	18.7
		6	3.4	7.6	8.3	18.7	11.8	26.4
		9	4.8	10.8	11.8	26.4	16.7	37.3
		12	6.8	15.2	16.7	37.3	23.6	52.7
15M	21.450	0	2.0	4.5	4.9	11.0	7.0	15.6
		3	2.8	6.4	7.0	15.6	9.9	22.1
		6	4.0	9.0	9.9	22.0	13.9	31.2
		9	5.7	12.7	13.9	31.1	19.7	44.0
		12	8.0	18.0	19.7	44.0	27.8	62.2
12M	24.990	0	2.3	5.3	5.8	12.9	8.1	18.2
		3	3.3	7.4	8.1	18.2	11.5	25.7
		6	4.7	10.5	11.5	25.7	16.2	36.3
		9	6.6	14.8	16.2	36.3	22.9	51.3
		12	9.4	20.9	22.9	51.2	32.4	72.5
10M	29.700	3	3.9	8.8	9.7	21.6	13.7	30.6
		6	5.6	12.5	13.6	30.5	19.3	43.2
		9	7.9	17.6	19.3	43.1	27.3	61.0
		12	11.1	24.9	27.2	60.9	38.5	86.1
6M	54.000	3	4.0	8.9	9.8	21.8	13.8	30.9
		6	5.6	12.6	13.8	30.8	19.5	43.6
		9	8.0	17.8	19.5	43.5	27.5	61.6
		12	11.2	25.1	27.5	61.5	38.9	87.0
		15	15.9	35.5	38.9	86.9	55.0	122.9

Table 5 RF Exposure Distance Chart in Meters

CFR Title 47 Part 97.13© (as of Apr. 1, 2020) requires the amateur operator to be in compliance with the radio frequency exposure requirements. The chart Table 5 above is a calculation of distances in meters for several different antenna gains using the formulae in the bulletin. To calculate in feet multiply the distance in meters by 3.28. The chart Table 6 below is a calculation of some common antenna gains. This will give you a rough estimation of the safe distance needed from the antenna in the direction of maximum gain. The chart is worst-case conditions of a continuous carrier for the full time allowed for exposure. The charts do not take into account the antenna patterns or elevation above the ground. In practice, most antennas have the maximum gain elevated above the ground. For a better estimate, the actual antenna would need to be analyzed for direction of maximum gain and gain in the direction of access.

	Dipole @30 ft	G5RV	43' Vertical	3 Element Triband Beam	6 Element 6M Yagi	Multiband Vertical
Freq	Gain dBI	Gain dBI	Gain dBI	Gain dBI	Gain dBI	Gain dBI
3.800	8	6.1	0.6			
7.200	6.9	6.3	-0.1			3
10.150	5.4	7.6	0			3
14.150	6.2	6.6	1.9	10.1		3
18.150	8	9.6	4.3			3
21.200	8	9.8	3.8	10.1		3
24.950	7	9.9	4.4			3
28.500	7	9.7	6.1	10.1		3
50.125	8	10.5	7.1		13.7	3

Table 6 Approximate Antenna Gain for Some Common Antennas

Controlled Distance exposure in Table 5 is that of the operator, family, and other members in the residence, given proper training, and allowing exposure for no more than 6 minutes at a time. Uncontrolled Distance is the neighbors and general public with no expectation of any training and the exposure is no more than 30 minutes at a time. The actual exposure level is time and power averaged which will usually reduce the total exposure. For example, the average SSB power is much lower,around 20 to 30% of the peak power, and will be averaged for the time of the actual transmission. For CW the power will be 100% but the transmitter will be transmitting for only about 40% of the total time. RTTY (digital modes), AM, and FM will be 100% duty cycle and last for the length of the transmission.

These calculations are for the direction of maximum gain. The FCC Office of Engineering and Technology (OET) Bulletin 65 Supplement B has more information on meeting the requirements.

Electronic Code of Federal Regulations (eCFR)
https://www.fcc.gov/bureaus/oet/info/documents/bulletins/oet65/oet65.pdf
https://www.fcc.gov/bureaus/oet/info/documents/bulletins/oet65/oet65b.pdf
https://www.fcc.gov/bureaus/oet/info/documents/bulletins/oet56/oet56e4.pdf

ALS-600PS Voltage Settings

Before opening up the ALS-600PS make sure the supply is unplugged. On the ALS-600PS there are several solder on jumpers to set the line voltage range. Change the jumpers only if the line voltage is low. For most cases, unless you need to change over to 220VAC there should not be a need to change the jumpers.

AC LINE VOLTAGE RANGE	PRIMARY	BUCK BOOST
95-110	A to B C to D	E to 2 F to 1
105-120	A to B C to D	E to F
115-130	A to B C to D	E to 1 F to 2
200-220	B to C	E to 2 F to 1
210-230	B to C	E to F
220-240	B to C	E to 1 F to 2

Table 7 ALS-600PS Voltage Settings

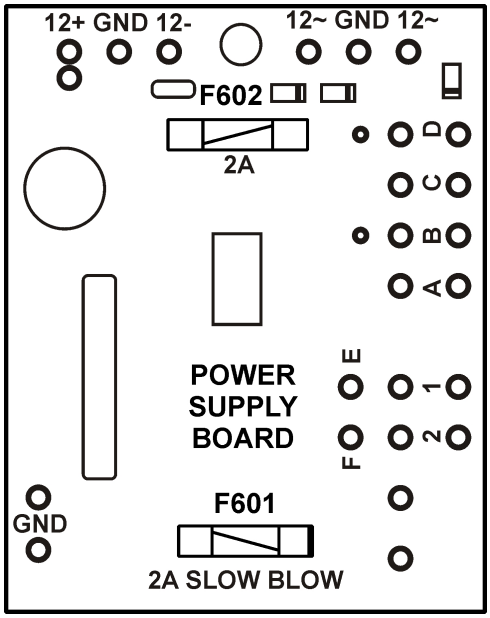

Figure 4 ALS-600PS Jumper Pins

ALS-600SPS Switching Power Supply

ALS-600SPS Voltage Settings

When opening up the ALS-600SPS make sure it is unplugged and has been off for a while to make sure the capacitors have been discharged. Some of the capacitors can have a charge of 300-400VDC.
The ALS-600SPS will only need to be changed when switching between 120 and 240VAC. Move these jumpers only when changing voltages. Do not move any other wires or bayonet connectors in the power supply.

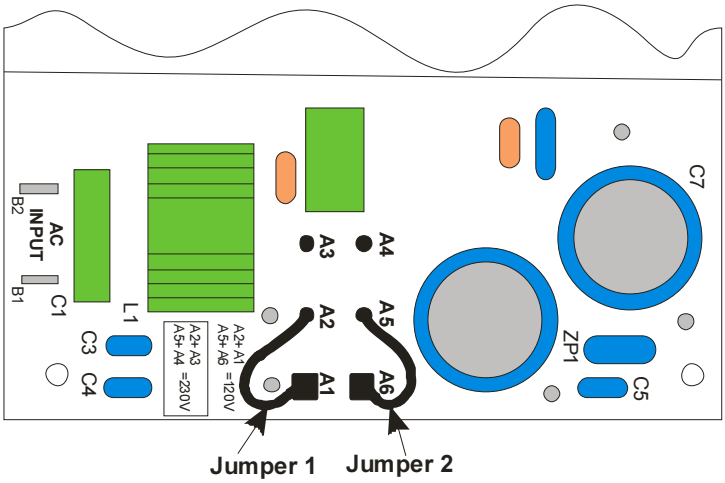

Figure 5 ALS-600SPS Board Diagram

	120V	240V
Jumper 1	A2 to A1	A2 to A3
Jumper 2	A5 to A4	A5 to A6

Table 8 ALS-600SPS Jumper Settings

Factory
116 Willow Road
Starkville, MS 39762

ALS-706 Limited Warranty

Ameritron warrants to the original purchaser that this product shall be free from defects in material (except tubes and RF output transistors) or workmanship for one year from the date of original purchase.

During the warranty period, Ameritron or an authorized Ameritron service facility will provide free of charge both parts (except tubes and RF output transistors) and labor necessary to correct defects in material or workmanship.

To obtain such warranty service, the original purchaser must:

(1) Complete and send in the Warranty Registration Card.
(2) Notify Ameritron or its nearest authorized service facility, as soon as possible after discovery of a possible defect, of:
  (a) The model number and serial number, if any:
  (b) The identity of the seller and the approximate date of purchase;
  (c) A detailed description of the problem, including details on the equipment.
(3) Deliver the product to the Ameritron or the nearest authorized service facility, or ship the same in its original container or equivalent, fully insured and shipping charges prepaid.

Correct maintenance, repair and use are important to obtain proper performance from this product. Therefore, carefully read the Instruction Manual. This warranty does not apply to any defect that Ameritron determines is due to:

(1) Improper maintenance or repair, including the installation of parts or accessories that do not conform to the quality and specifications of the original parts.
(2) Misuse, abuse, neglect or improper installation.
(3) Accidental or intentional damage.

All implied warranties, if any, terminate one (1) year from the date of the original purchase.

The foregoing constitutes Ameritron's entire obligation with respect to this product, and the original purchaser and any user or owner shall have no remedy and no claim for incidental or consequential damages. Some states do not allow limitations on how long an implied warranty lasts or do not allow the exclusion or limitation of incidental or consequential damage, so the above limitation and exclusion may not apply to you.

This warranty gives specific legal rights and you may also have other rights which vary from state to state.

PLEASE RECORD THIS INFORMATION:

Model _____ Serial No. _____
Date of Purchase _____
Purchased From _____
Warranty Card Mailed On _____