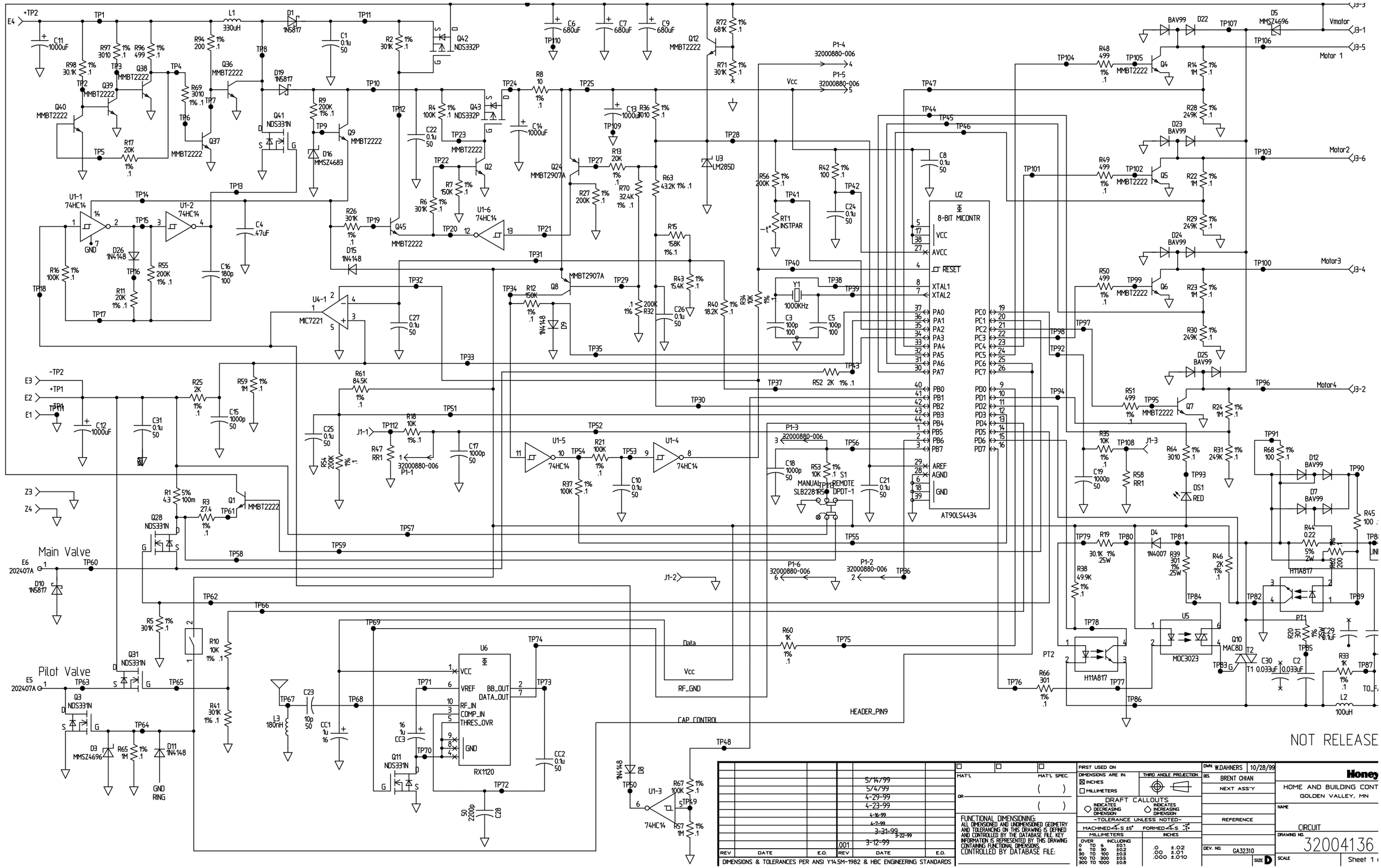

REV	DATE	E.O.	REV	DATE	E.O.
				5/14/99	
				5/4/99	
				4-29-99	
				4-23-99	
				4-16-99	
				4-7-99	
				3-31-99	
				3-22-99	
				3-12-99	
			.001		

DIMENSIONS & TOLERANCES PER ANSI Y14.5M-1982 & HBC ENGINEERING STANDARDS

MAT'L | MAT'L SPEC. | OR

FUNCTIONAL DIMENSIONING:
ALL DIMENSIONED AND UNDIMENSIONED GEOMETRY AND TOLERANCING ON THIS DRAWING IS DEFINED AND CONTROLLED BY THE DATABASE FILE KEY INFORMATION IS REPRESENTED BY THIS DRAWING CONTAINING FUNCTIONAL DIMENSIONS.
CONTROLLED BY DATABASE FILE:

FIRST USED ON
DIMENSIONS ARE IN: ☒ INCHES ☐ MILLIMETERS
THIRD ANGLE PROJECTION
DRAFT CALLOUTS
INDICATES DECREASING DIMENSION
INDICATES INCREASING DIMENSION
-TOLERANCE UNLESS NOTED-
MACHINED ±5° FORMED ±5°

MILLIMETERS		INCHES	
OVER	INCLUDING		
0 TO 6	±0.1	.0	±.02
6 TO 30	±0.2	.00	±.01
30 TO 100	±0.3	.000	±.010
100 TO 300	±0.5		
300 TO 1000	±0.8		

DWN. W.DAHNERS 10/28/99
DES. BRENT CHIAN
NEXT ASS'Y
REFERENCE
DEV. NO. GA32310
SIZE D
INTEGRA 3.5

Honeywell
HOME AND BUILDING CONT
GOLDEN VALLEY, MN
NAME
CIRCUIT
DRAWING NO. 32004136
SCALE
Sheet 1