Introduction

Innovative technology and ergonomic design make this notebook the ideal user-friendly and reliable travel companion. Your operating system is pre-installed on the hard disk to facilitate the procedure when you use your notebook for the first time.

The energy-saving processor and the energy-saving functions that can be configured allow you to use the battery capacity of your notebook effectively. By using an additional battery instead of the disk drive, you can double the notebook's mobile operation time.

Your notebook has 32 - 192 MB of main memory installed, depending on the upgrade level. Data is saved on an Enhanced-IDE hard disk drive. Your notebook is also equipped with a 3 1/2" floppy disk drive and a CD-ROM drive. In addition, your notebook can be equipped with a DVD drive or with a 2ndd hard disk drive. Two PC card slots (CardBus or PCMCIA) enable the notebook to operate two type II PC cards or one type III PC card.

For mouse control the notebook provides a touchpad. A double-touch directly on the touchpad is all that is needed, for example, to open an application.

Your notebook has connectors for external devices such as, e.g. external monitor, printer and mouse. The parallel port (which supports ECP and EPP modes) is designed to accommodate bi-directional data transfer. You can connect peripherals such as, e. g. scanner, loudspeakers, gamepads, keyboard or mouse via the USB interface.

The notebook disposes of a infrared interface for wireless data transfer.

In addition, the notebook has a connection port for a MobiDock or a QuickPort.

An audio controller, two loudspeakers, a microphone, an audio input and output and a loudspeaker output provide your notebook with an audio capability. You can thus incorporate voice, noise effects and music into your notebook environment. You can also connect an external microphone and an external loudspeaker.

The system settings of the notebook can be configured via the user-friendly *BIOS Setup* program. Certain system settings (e.g. screen display, power-management functions) can be modified via various key combinations while you are using the notebook.

Your notebook has a number of security features to ensure that no unauthorized persons can access your data. For example, you can activate a screen saver with password protection. The security functions in the *BIOS Setup* also allow you to protect your data by means of passwords.

This Operating Manual tells you how to put your notebook into operation and how to operate it in daily use.

Further information on this notebook is provided:

- in the "Safety Notes" manual which is included with your notebook
- in the documentation of your operating system
- on the SCENIC Mobile CD "Drivers & Utilities"
- in the information files (e. g. **.TXT, *.WRI, *.DOC, *.HLP*)
- on the Internet under *www.sni-pc.de/drivercd*

Notational conventions

The meanings of the symbols and fonts used in this manual are as follows:

Pay particular attention to texts marked with this symbol. Failure to observe this warning endangers your life, destroys the notebook, or may lead to loss of data.

This symbol is followed by supplementary information, remarks and tips.

► Texts which follow this symbol describe activities that must be performed in the order shown.

`Texts in this typeface` are screen outputs from the PC.

Texts in italics indicate commands or menu item.

Installing an ergonomic video workstation

Before you set up your equipment you should select a suitable position for working at the monitor. Please observe the following advices when installing a video workstation.

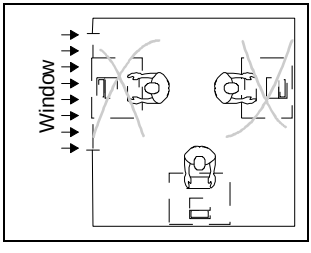

Avoid direct and reflected glare.

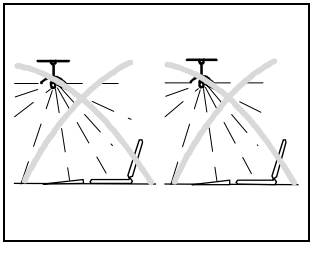

Avoid glare from electric lighting.

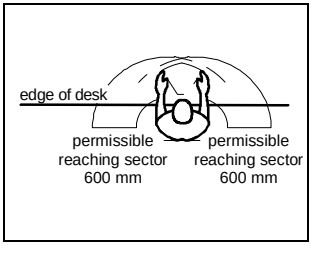

Position the keyboard where it is easiest to reach.

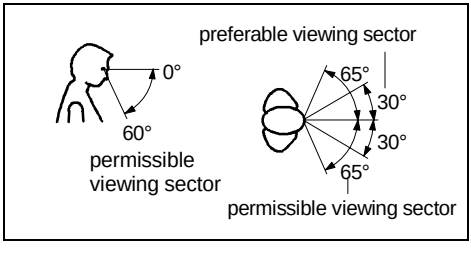

Position the monitor for optimum viewing. The viewing distance to the monitor should be approximately 50 cm.

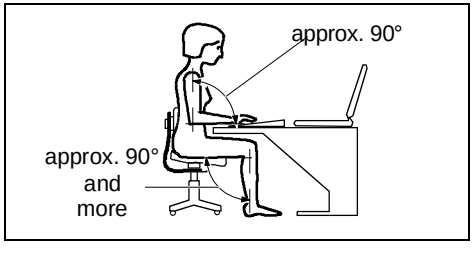

Remember to maintain correct posture.

Important notes

In this chapter you will find information regarding safety which it is essential to take note of when working with your notebook. The manufacturer's notes contain helpful information on your notebook. This chapter also contains information on the licenses like CE certificate and RFI suppression of the notebook.

Safety

Pay attention to the information provided in the manual "Safety Notes".

- During installation and before operating the device, observe the instructions on environmental conditions in the chapter entitled "Technical data" as well as the instructions in the chapter "Preparation for use and operation".
- When cleaning the device, observe the relevant notes in the paragraph "Cleaning the notebook".
- Keep this Operating Manual together with your device. If you pass on the device to third parties, you should also pass on this manual.

Notes on installing and removing boards and modules

Only qualified technicians may repair the device. Unauthorized opening or incorrect repair may greatly endanger the user (electric shock, fire risk).

Boards with electrostatic sensitive devices (ESD) may be identified by the label shown.

When you handle boards fitted with ESDs, you must observe the following points under all circumstances:

- You must always discharge yourself (e.g. by touching a grounded object) before working.
- The equipment and tools you use must be free of static charges.
- Pull out the power plug before inserting or pulling out boards containing ESDs.
- Always hold boards with ESDs by their edges.
- Never touch pins or conductors on boards fitted with ESDs.

Manufacturer’s notes

Energy saving

Make use of the device's power management features (see "Preparation for use and operation").

- If you will not be using your notebook, switch it off.
- The notebook uses less power when the power management features are enabled. You will then be able to work for longer before having to recharge the battery.

Energy saving under Windows

If a monitor with energy saving features is connected to your notebook, you can use the *Screen Saver* tab to set the energy saving features of the monitor. Select the following item in the start menu: *Settings - Control Panel - Display - Display Properties - Screen Saver - Energy saving features of monitor*. You can set additional energy saving functions in the *Start - Settings - System control - Energy - Extended* menu.

Disposal and recycling

This device has been manufactured to the greatest possible degree from materials which can be recycled or disposed of in a manner that is not environmentally damaging. The device is taken back after use, so that it can be recycled, provided that it is returned in a condition which is the result of normal use. Any components not recuperated will be disposed of in an environmentally acceptable manner.

For devices marked with this symbol Siemens AG offers a guarantee for **36 months** with a **Bring-in-Service**. The guarantee starts on the day of delivery (sale date) by Siemens or a Siemens partner.

We herewith declare that it will be possible to repair any device marked with the eco-label for at least 5 years after production of that device has discontinued.

Information on power management and energy saving mode can be found in chapter "Technical data".

Do not throw lithium batteries or accumulators into the trashcan. They must be disposed of in accordance with local regulations concerning special waste.

If you have any questions on disposal, please contact your local office, our service department, or, directly:

Siemens AG
Recycling Center
D-33094 Paderborn

Tel.: ..49 5251 818010
Fax: ..49 5251 818015

CE certificate

The shipped version of this device complies with the requirements of the EEC directives 89/336/EEC "Electromagnetic compatibility" and 73/23/EEC "Low voltage directive".

FCC Class B Compliance Statement

If there is an FCC statement on the device, then:
The following statement applies to the products covered in this manual, unless otherwise specified herein. The statement for other products will appear in the accompanying documentation.

NOTE:

This equipment has been tested and found to comply with the limits for a "Class B" digital device, pursuant to Part 15 of the FCC rules and meets all requirements of the Canadian Interference-Causing Equipment Regulations. These limits are designed to provide reasonable protection against harmful interference in a residential installation. This equipment generates, uses and can radiate radio frequency energy and, if not installed and used in strict accordance with the instructions, may cause harmful interference to radio communications. However, there is no guarantee that interference will not occur in a particular installation. If this equipment does cause harmful interference to radio or television reception, which can be determined by turning the equipment off and on, the user is encouraged to try to correct the interference by one or more of the following measures:

- Reorient or relocate the receiving antenna.
- Increase the separation between equipment and the receiver.
- Connect the equipment into an outlet on a circuit different from that to which the receiver is connected.
- Consult the dealer or an experienced radio/TV technician for help.

Siemens AG is not responsible for any radio or television interference caused by unauthorized modifications of this equipment or the substitution or attachment of connecting cables and equipment other than those specified by Siemens AG. The correction of interferences caused by such unauthorized modification, substitution or attachment will be the responsibility of the user.

The use of shielded I/O cables is required when connecting this equipment to any and all optional peripheral or host devices. Failure to do so may violate FCC rules.

Power cord selection

The power cord for this unit has been packed separately and has been selected according to the country of destination. It must be used to prevent electric shock. Use the following guidelines if it is necessary to replace the original cord set.

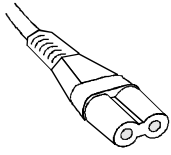

The female receptacle of the cord set must meet IEC 320 requirements.

For the United States and Canada

Use a UL listed and CSA labeled cord set consisting of a two conductor cord with a maximum length of 15 feet.

For units which stand on a desk or table, type SVT or SJT cord sets shall be used.

For units which stand on floor, only SJT type cord sets shall be used.

The cord set must be selected according to the current rating for your unit. Please consult Table A for the selection criteria for power cords used in the United States and Canada.

Table A:

Cord Type	Size of Conductors in Cord	Maximum Current Rating of Unit
SJT	18 AWG 16 AWG 14 AWG	10 Amps 12 Amps 12 Amps
SVT	18 AWG 17 AWG	10 Amps 12 Amps

For units set at 115 V:

use a parallel blade attachment plug rated 15 A, 125 V.

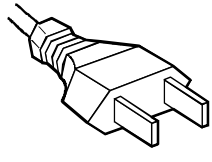

For units set at 230 V (outside of the United States and Canada):

use a cord set consisting of a minimum AWG according to Table A and an attachment plug rated 15 A, 250 V. The cord set should have the appropriate safety approvals for the country in which the equipment will be installed and should be marked HAR.

On the move with the notebook

Please observe the points listed below when transporting your notebook.

Transporting the notebook

- Do not carry the notebook by its open screen or by an empty slot.
- Switch off the notebook.
- Remove all data carriers (e.g. floppy disk, CD) from the drives.
- Always use the bag supplied when transporting the notebook.
  If it needs to be shipped, use the original packaging or other suitable packaging to protect it from damage through mishandling.
- The carrying bag provided protects against dust, but offers no protection against jolts or impacts.
- Protect the notebook from severe shocks and extreme temperatures (e.g., direct sunlight in a car).

Before starting the journey

- Copy important data from the hard disk to a floppy disk.
- Remove all data carriers (e.g. floppy disk, CD) from the drives.
- If you wish to use your notebook during a flight, check first with the flight attendants if it is permissible to do so.
- If you are travelling abroad, ensure that the power adapter can be operated on the local line voltage. If this is not the case, obtain the appropriate power adapter for your notebook.
  Do not use any other voltage converter!

Cleaning the notebook

Switch the notebook off and pull the power plug of the power adapter out of the power socket.

Do not clean any interior parts yourself, leave this job to a service technician.

Do not use any cleaning agents that contain abrasives or may corrode plastic.

Ensure that no liquid enters the notebook.

Wipe the casing with a dry cloth. If particularly dirty, use a cloth which has been moistened in mild domestic detergent and then carefully wrung out.

To clean the keyboard and the touchpad, you can use disinfectant wipes..

Wipe the monitor casing with a soft, moistened cloth.

Preparation for use and operation

Pay attention to the chapter "Important notes".

You must charge the battery and install the application programs before you can work with the notebook. The operating system and required drivers are preinstalled.

When used away from a wall power outlet, the notebook runs on its built-in battery. You can increase battery life by enabling its power management features.

If you use the notebook in a normal office situation, you run it off the mains with the aid of the power adapter, or in a MobiDock or QuickPort/QuickPort/Plus.

Refer to the chapter on "System expansions" for instructions on how to connect external devices (e.g. mouse, printer) to the notebook.

Unpacking and checking the delivery

▶▶ Unpack all the individual parts.

▶▶ Check the delivery for damage incurred during transport.

▶▶ Check whether the delivery agrees with the details in the delivery note.

▶▶ Check whether all necessary details have been entered on the first page of the guarantee coupon booklet.

Should you discover that the delivery does not correspond to the delivery note, notify your local sales office immediately.

Do not discard the original packing material of the devices. Keep it for future transportation of the drive.

Choosing where to set up your notebook

Select a suitable location for the notebook before setting it up. Bear the following points in mind when looking for a location.

- We recommend that you place your notebook on a surface with good anti-slip qualities. In view of the multitude of different finishes and varnishes used on furniture, it is possible that the rubber feet of the devices will mark the surface they stand on.
- Do not expose the notebook to extreme environmental conditions. Protect it from dust, humidity and heat.
- Keep other objects 100 mm clear of the notebook and its power adapter to ensure adequate ventilation. The space between the notebook's feet must be clear. Do not place it on a soft surface (e.g., a carpet or soft furnishings).
- The power adapter must be at least 200 mm away from the notebook. It must be free-standing and may not be covered. Do not stand the power adapter on heat-sensitive material.

- For wireless data transfer you must align the notebook's infrared interface with that of the partner device (e.g. PC). The devices must not be more than one meter apart.

Preparing the notebook for use

The supplied power cord conforms to the requirements of the country in which you purchased your notebook. Make sure that the power cable is approved for use in the country in which you intend to use it.

The notebook and the power adapter should be at least 200 mm apart. Keep other objects 100 mm clear of the notebook and its power adapter.

Do not cover the ventilation slots in the notebook.

▶▶ Place the notebook on a level, stable surface.

Depending on the version, your notebook will be supplied with and internal or an external power adapter.

External power adapter

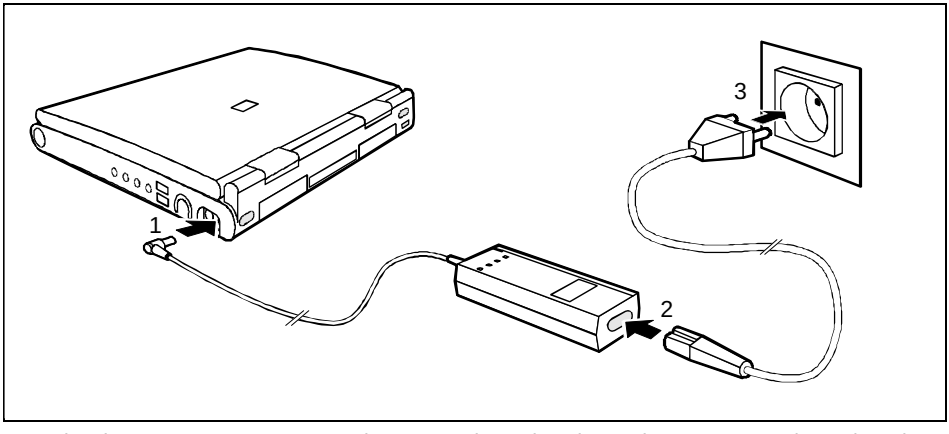

▶▶ Plug the DC output connector on the power adapter into the DC input connector (DC IN) on the notebook (1).

▶▶ Connect the AC power cable to the power adapter (2).

▶▶ Plug the power cable into the power outlet (3).
The power adapter indicator lights up.

Internal power adapter

▶▶ Place the AC adapter in the left-hand slot so that the contacts enter first. The connector for the AC adapter power cable must face outwards.

▶▶ Push the AC adapter into the slot until you feel it locking into place.

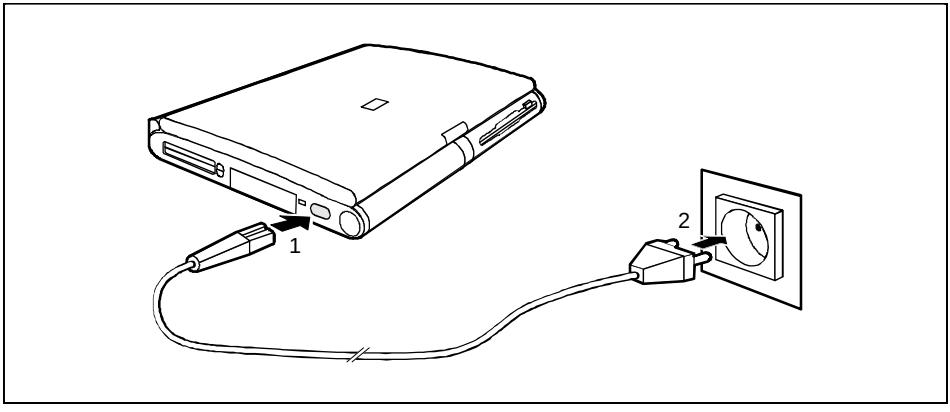

▶▶ Connect the power cable to the AC IN connector on the notebook (1).

▶▶ Plug the power cable into the power outlet (2).

A battery built into the right slot is recharged in this configuration. A battery is fully charged in approximately three hours if the notebook is switched on. If the notebook is switched on, it will charge in roughly five to six hours.

i You can also make your notebook operational by connecting it to the optional power adapter or car adapter (see "Charging, caring for and maintaining the battery"). The AC adapter can also be operated as an external power adapter (see "Using AC adapter as external power adapter").

Switching on the notebook

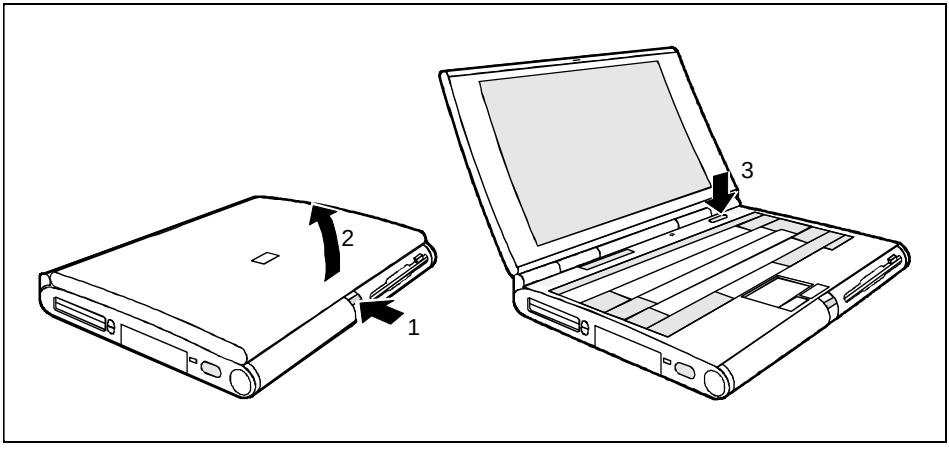

▶▶ Press the release button (1) and unfold the display upwards (2).

▶▶ Press the ON/OFF switch (3) for roughly one second.

You must not switch off or warm-boot your notebook during first-time installation .

When you switch on your notebook for the first time the supplied software is set up and configured. Please follow the instructions on the screen.
If you want to partition your hard disk, please refer to chapter "Restoring the hard disk contents under Windows 9x".

If you have assigned a password, you must enter this when requested to do so, in order to start the operating system.

Notes on Windows

The license number for Windows is printed on the front cover of the Windows manual supplied.

Switching off the notebook

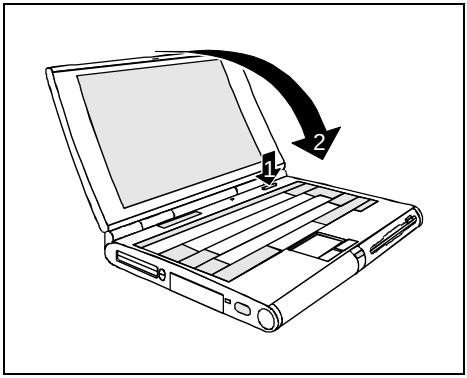

▶▶ Shut down the operating system properly. If Windows 9x is installed on your notebook, the system is shut down and the notebook is switched off. If the notebook is not switched off automatically, press the ON/OFF switch (1) for approx. one second.

▶▶ Close the display of the notebook (2) so that it locks into place.

Indicators and input devices

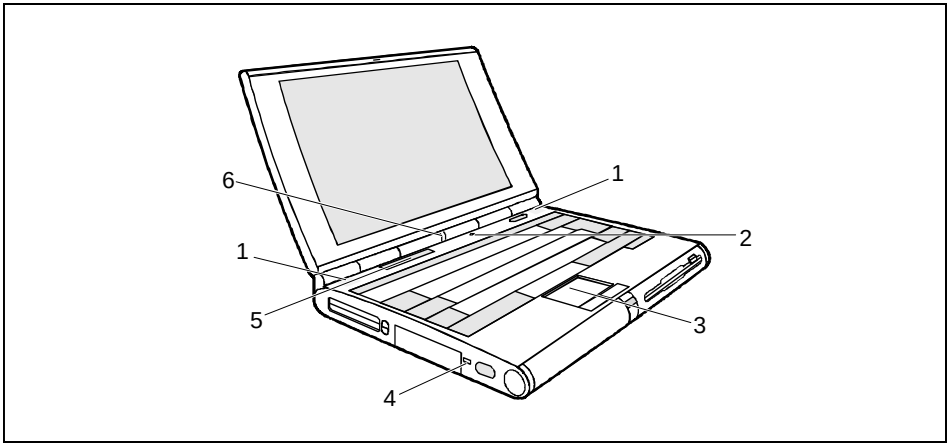

1 = LCD lock
2 = LCD switch-off
3 = Touchpad with touchpad buttons
4 = Kensington Lock device
5 = Display field
6 = Battery indicator (right)
power-on indicator (left)

Only release the LCD lock when required.

You can protect your notebook from theft with the Kensington Lock device (3) and with a Kensington MicroSaver.

Battery indicator

Glows green: Battery is being charged
Glows red: Battery capacity is below 12% or battery is defective

Power-on indicator

Glows green: Notebook is switched on
Glows red: Processor is in idle mode
Glows orange: Processor operates at half frequency
Flashes: Notebook is in standby mode

Display field

Symbols and texts in the display field indicate the operating state of the notebook. The meaning of the symbols and texts are as follows:

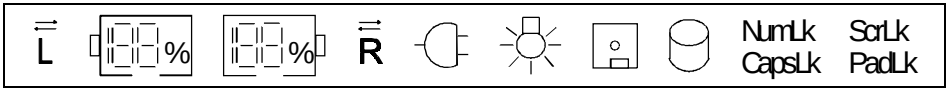

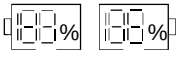

Indicates the approximate capacity of the installed batteries in percent.

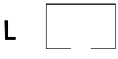

The left battery is installed. When the symbol flashes, the left battery is drained or defective (for measures, see "Charging, caring for and maintaining the battery").

The right battery is installed. When the symbol flashes, the right battery is drained or defective (for measures, see "Charging, caring for and maintaining the battery").

The arrow shows whether the battery is being charged or drained.

The notebook is connected to an external power source (e.g. via the power adapter).

The notebook is switched to Suspend to DRAM mode.

The floppy disk in the floppy disk drive is being accessed. You must not remove the floppy disk when this symbol is visible.

A drive (hard disk drive, CD-ROM drive, DVD drive or Zip drive) is being accessed. When this symbol appears, do not remove the data carrier from the drive.

CapsLK — All the characters you type appear as uppercase. In the case of overlay keys, the character on the upper left on the keycap appears when that key is pressed. The CapsLock indicator appears when you press the ⇧ key.

ScrLK — The SCROLL LOCK key has been pressed. The effect this key has varies from program to program.

NumLK — The Pad Num key has been pressed. If PadLK is also visible in the function display, the blue numbers on the lower right on keys in the integrated numeric keypad are enabled.

PadLK — The key combination Fn + Pad Num has been pressed.

Touchpad and Touchpad Keys

Make sure that the touchpad does not come into contact with dirt, liquids or grease.

Do not touch the touchpad if your fingers are dirty.

Do not rest heavy objects (e.g., books) on the touchpad or the touchpad buttons.

The touchpad enables you to move the mouse pointer on the screen. If, for example, you move one finger to the left over the touchpad, the mouse pointer also moves to the left.

A brief tap with the finger on the touchpad has the same effect as clicking with the left mouse button. A brief "double-tap" with the finger on the touchpad has the same effect as double-clicking with the left mouse button.

The left and right touchpad buttons have the same functions as the left and right mouse buttons.

If you attach and install an external mouse, the touchpad and its buttons are disabled. If you attach an external serial mouse, you must select the *Disabled* option for the *PS/2 Pointing Device* field in the *Main Setup*. This also releases interrupt 12, so that you can use it for other applications.

Keyboard

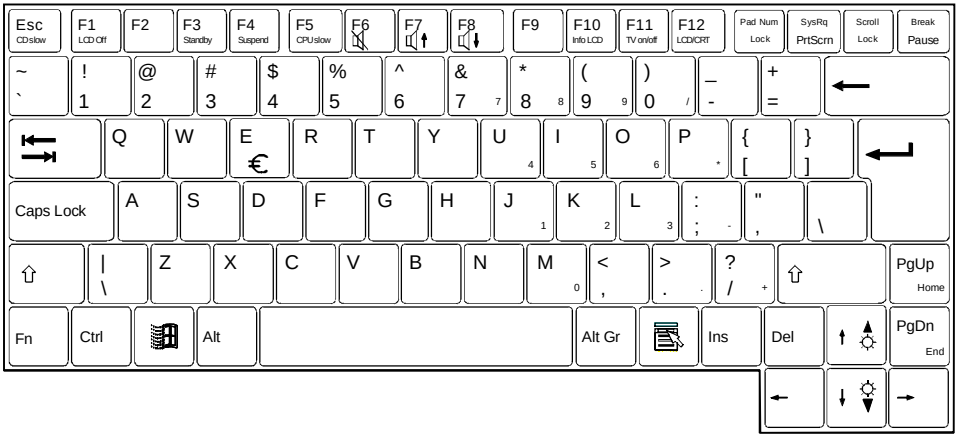

The following description of keys and key combinations refers to Windows 9x Additional functions supported by the keys are described in the relevant manuals supplied with your application programs.

The figure below shows how to access the different characters on keys with overlaid functions. The keystrokes shown in the example only work if CapsLK, NumLK, and PadLK have not been enabled (i.e. they are not visible in the display field).

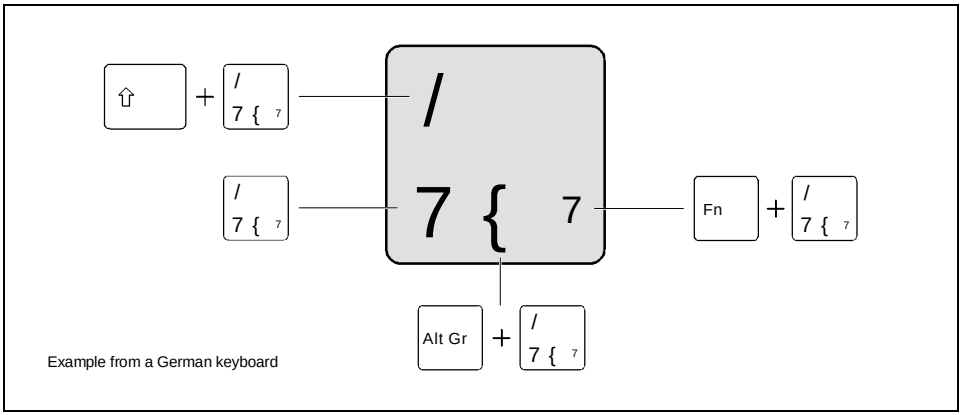

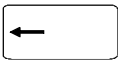

Backspace key
The Backspace key deletes the character to the left of the cursor.

Tab key
The Tab key moves the cursor to the next tab stop.

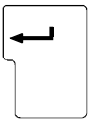

Enter key (return, enter, line feed, carriage return)
The enter key terminates a command line. The command you have entered is executed when you press Enter.

Caps Lock key
The Caps Lock key activates uppercase mode (CapsLK is shown in the display field). The Caps Lock function causes all the characters you type to appear as uppercase. In the case of overlay keys, the character on the upper left on the keycap appears when that key is pressed.
To cancel the Caps Lock function, simply press the Caps Lock key again.

Shift key
The Shift key causes uppercase characters to appear. In the case of overlay keys, the character on the upper left on the keycap appears when that key is pressed.

Alt Gr key
The [Alt Gr] key causes the characters in the lower middle of the keycap to appear (e.g. in the case of the [7] key).

Fn
The [Fn] key enables the special functions indicated in blue on overlay keys (see "Key combinations").
If the external keyboard does not feature a [Fn] key, you can simultaneously press the [Ctrl] + [Alt Gr] key or the [Ctrl] key and the right [Alt] key instead.

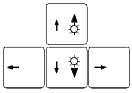

Cursor keys
The cursor keys move the cursor in the direction of the arrow, i.e., up, down, left, or right.

Pad Num key
When the numeric keypad is enabled (PadLK is visible in the display field), the Pad Num key causes this set of keys to produce numbers (NumLK appears in the display field). Pressing them produces the blue characters shown on the bottom right on the keycaps.

Pause key
The Pause key temporarily suspends display output. Output will resume when press any other key.

Start key
invokes the *START* menu of Windows.

Menu key
The Menu key invokes the menu for the marked item (Windows).

Euro key
The Euro-key produces the Euro character (Windows 98 and Windows NT5.0).

Numeric keypad

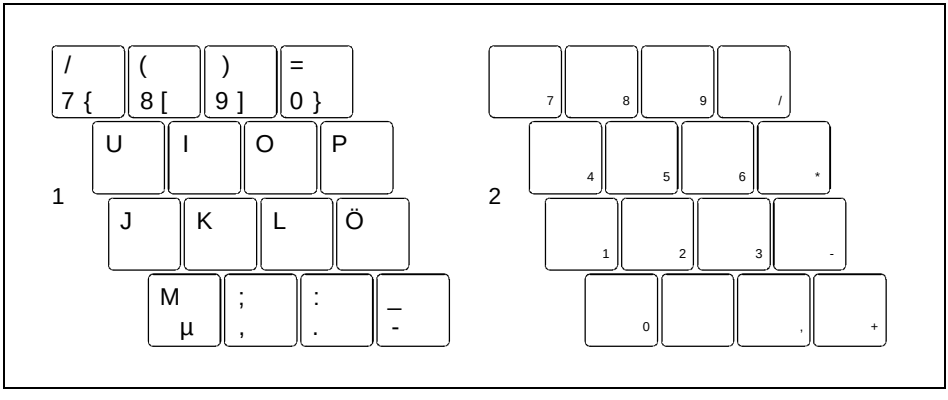

1 = Characters enabled when neither PadLK, nor NumLK are visible in the display field.
2 = Characters enabled when PadLK and NumLK are visible in the display field.

The key Pad Num enables and disables the integrated numeric keypad. If the numeric keypad is enabled (NumLK is shown in the display field) and you hold the Fn key down, you can output the characters printed in blue at the right bottom of the keys.

When the numeric keypad is enabled (NumLK is visible in the display field), pressing the key combination Fn + Pad Num enables and disables the numeric entry in the integrated numeric keypad. If numeric entry is enabled (NumLK and PadLK are shown in the display field), the blue characters at the bottom right of the keys are effective.

If the numeric keypad and numeric entry are both enabled (NumLK and PadLK are shown in the display field), you can also output standard characters with the numeric keypad. If you press and hold the key [Fn], the keys will produce lowercase letters and numbers indicated on the lower left of the keycaps. If you press and hold the key combination [Fn] + Shift, the keys will produce uppercase letters and the characters indicated on the upper left of the keycaps.

Key combination

The following description of keys and key combinations refers to Windows 9x Some of the following key combinations may not function in other operating systems and with some device drivers.
Other key combinations are described in the relevant manuals supplied with your application programs.

You enter key combinations as follows:

▶▶ Press and hold the first key in the combination.

▶▶ While keeping the first key pressed, press the other key or keys in the combination.

i If the external keyboard does not feature a [Fn] key, you can simultaneously press the [Ctrl] + [Alt] keys instead.

Fn + F1 LCD Off

Switching monitor on/off
This key combination switches your notebook's display on and off. Doing so does not affect any running programs.

Fn + F3 Standby

Enabling Standby mode
This key combination enables Standby mode. The power-on indicator flashes. You can cancel Standby mode by pressing any key.

Fn + F4 Suspend

Enabling Suspend mode
This key combination switches the Suspend mode on (see Section "Suspend mode "). When you switch the notebook on again, it returns to the same place you were in the program that was running when you switched to Suspend mode.

Fn + F5 CPU slow

Reducing CPU speed
This key combination reduces the CPU speed by 50 %.

Fn + F6

Switching the loudspeaker on/off
This key combination switches your notebook's integrated loudspeaker on and off.

Fn + F7

Increasing the volume
This key combination raises the volume of the integrated loudspeaker.

Fn + F8

Reducing the volume
This key combination decreases the volume of the integrated loudspeaker.

Fn + F10 Info LCD

Switching over battery indicator
This key combination switches the battery indicator in the display field between battery capacity in %, as time (notebook will still run xx:xx hours) or the battery charge level display.

Fn + F11 TV on/off

Switching TV out on/off
This key combination switches the video output (TV out) on or off.

Fn + F12 LCD/CRT

Switching between internal and external display
If an external display is connected to your notebook, you can switch to it with this key combination. You can opt to use:

- just the notebook's internal display
- just the external display
- both the internal and the external display
- just the television
- both the internal display and the television

Fn + ↑ ☼

Increasing the display brightness
This key combination increases the brightness of the display.

Fn + ↓ ☼

Reducing the display brightness
This key combination reduces the brightness of the display.

Fn + → ◑

Reducing display contrast
If the notebook has an ADS color monitor, this key combination reduces the display contrast.

Fn + ← ◑

Increasing display contrast
If the notebook has an ADS color monitor, this key combination increases the display contrast.

Ctrl + Break Pause

Halting the current operation
This key combination can be used to halt an operation instantly (its effect depends on the program that is running).

Ctrl + C

Halting the current operation
This key combination can be used to halt an operation instantly without clearing the keyboard buffer.

Ctrl + Alt + Del

Warm boot
This key combination triggers a reset and warm-boots the notebook.

⇧ + ⇤

Negative tabulator jump, Backtab (Shift+Tab)
This key combination moves the cursor back to the previous tabular stop.

The battery

The battery supplies your notebook with the necessary power during mobile use. You can increase battery life by enabling its power management features.

The battery charge is indicated by the battery symbol in the display field (see the section "Indicators and input devices") When you switch on the notebook, it takes a few seconds before the battery status is displayed.

The battery will last for roughly 500 charge/discharge cycles.

Charging, caring for and maintaining the battery

The battery can only be charged, when the ambient temperature is between 5°C and 40°C.

The battery charge is indicated by the battery symbol in the display field.

A battery is fully charged in approximately three hours if the notebook is switched on. If the notebook is switched on, the battery will charge in roughly five to six hours.

You can charge the battery by:

- connecting the notebook to the AC adapter
- connecting the notebook to the power adapter
- connecting the notebook to the car adapter
- connecting the notebook to the MobiDock
- connecting the notebook to the QuickPort

Batteries are to be stored in a charged state of approximately 50% over a long period of time (longer than two months). If you store the batteries up to two months, the charge status of the batteries must be approximately 30%. The batteries should be stored in a dry environment in temperatures between +10°C and +25°C.

i

If you do not use the batteries for longer periods, remove them from the notebook. Never store the batteries in the unit.

Connecting the AC adapter

The supplied power cord conforms to the requirements of the country in which you purchased your notebook. Make sure that the power cable is approved for use in the country in which you intend to use it.
Keep other objects 100 mm clear of the notebook. Do not cover the ventilation slots in the notebook.

- ▶▶ Switch off the notebook.
- ▶▶ Place the notebook on a level, stable surface.
- ▶▶ Deinstall the battery from the left slot and install it in the right slot (see "Removing and installing drives and batteries").
- ▶▶ Place the AC adapter in the left-hand slot so that the contacts enter first. The connector for the AC adapter power cable must face outwards.
- ▶▶ Push the AC adapter into the slot until you feel it locking into place.

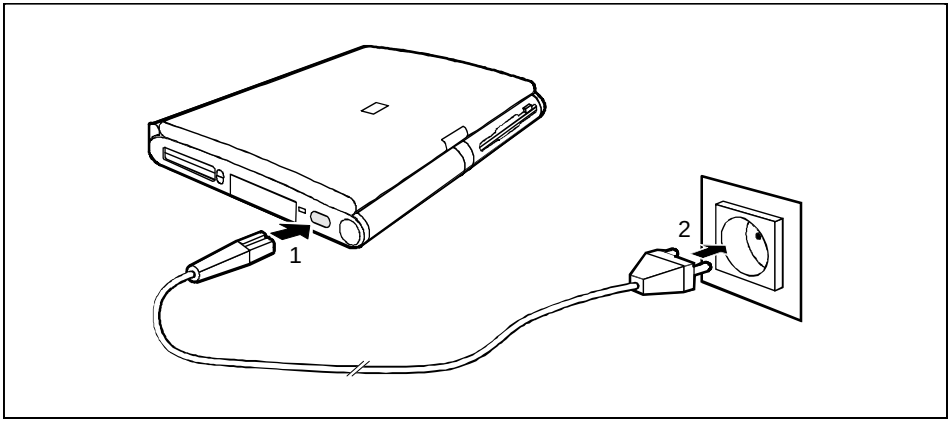

- ▶▶ Connect the power cable to the AC IN connector on the notebook (1).
- ▶▶ Plug the power cable into the power outlet (2). The battery charges.

Using AC adapter as external power adapter

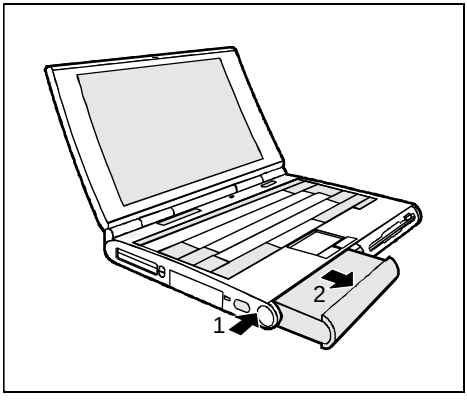

- ▶▶ Switch off the notebook.
- ▶▶ Swing open the display.
- ▶▶ Place the notebook on a level surface.
- ▶▶ Press the release button of the AC adapters (1).
- ▶▶ Pull the AC adapter out of the slot (2).
- ▶▶ Install the battery in the slide-in module.

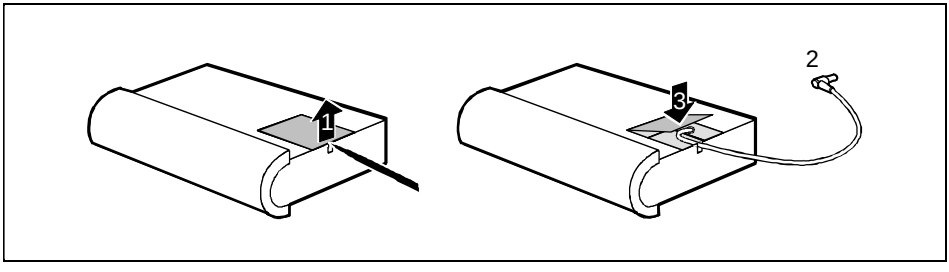

- ▶▶ Open the flap of the AC adapter (1).
- ▶▶ Pull the power adapter cable somewhat out of the AC adapter (2). The power adapter cable is permanently attached to the AC adapter and cannot be completely removed from the AC adapter.
- ▶▶ Close the flap of the AC adapter (3). When doing so, make sure that the power adapter cable is located in the groove of the AC adapter provided, and is not pinched between the flap and the AC adapter.
- ▶▶ Place the notebook on a level, stable surface.

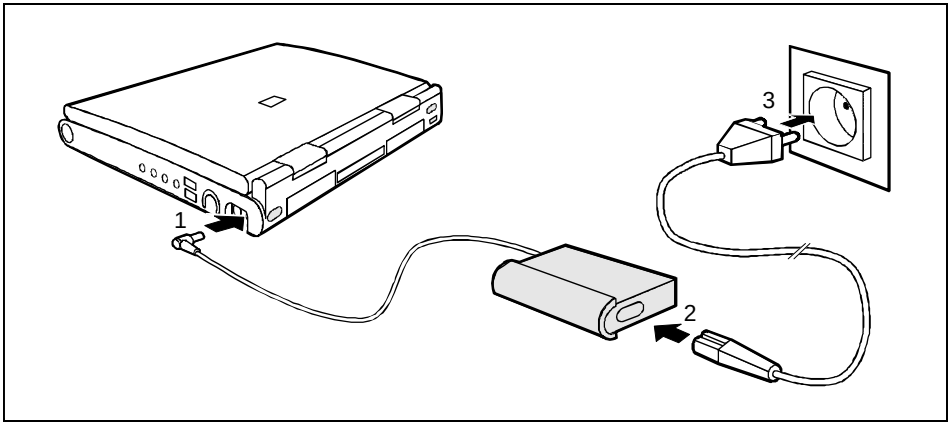

▶▶ Connect the power adapter cable of the AC adapters to the direct current socket (DC IN) of the notebook (1).

▶▶ Connect the power cable to the AC adapter (2).

▶▶ Plug the power cable into the power outlet (3).

The power adapter indicator lights up.

Connecting the power adapter

The supplied power cord conforms to the requirements of the country in which you purchased your notebook. Make sure that the power cable is approved for use in the country in which you intend to use it.
The notebook and the power adapter should be at least 200 mm apart. Keep other objects 100 mm clear of the notebook and its power adapter. Do not cover the ventilation slots in the notebook and the power adapter.
Do not stand the power adapter on heat-sensitive material.
The power adapter's AC cord may only be connected to a wall outlet if the notebook is connected to the power adapter.

▶▶ Switch off the notebook.

▶▶ Place the notebook on a level, stable surface.

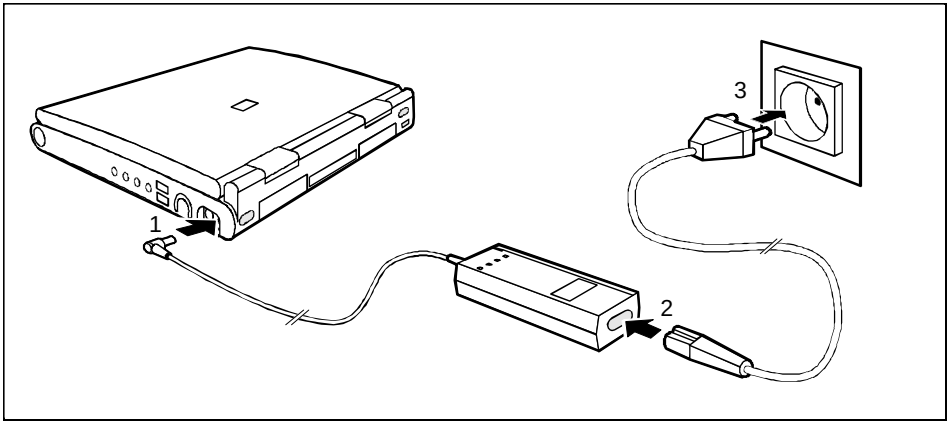

▶▶ Plug the DC output connector on the power adapter into the DC input connector (DC IN) on the notebook (1).

▶▶ Connect the AC power cable to the power adapter (2).

▶▶ Plug the power cable into the power outlet (3).
The power adapter indicator lights up. The battery charges.

Connecting the car adapter

You can use the car adapter to charge your notebook's battery if the car has a 12V electrical system.

▶▶ Switch off the notebook.

▶▶ Place the notebook on a level, stable surface.

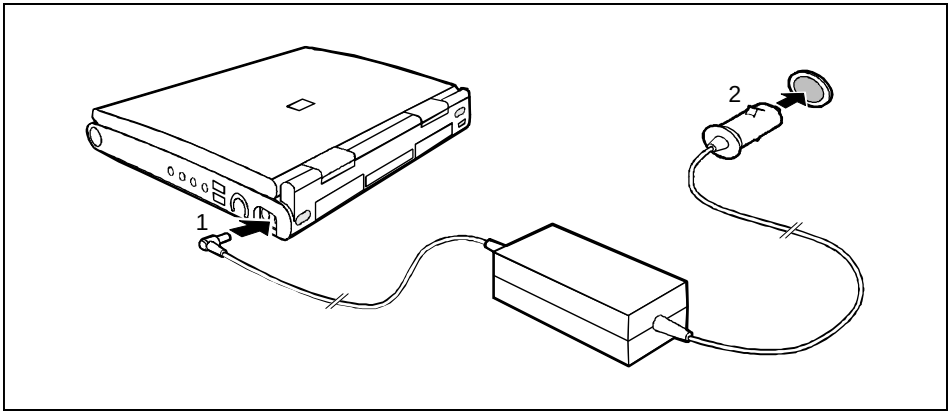

▶▶ Plug the DC output connector on the car adapter into the DC input connector (DC IN) on the notebook (1).

▶▶ Start the car's engine.

You should only use the car adapter while the car's engine is running. You must not start the car's engine while the car adapter is connected to the car's electrical system.

Do not stand the car adapter on heat-sensitive material. When in operation, the car adapter must be free-standing and may not be covered.

Keep other objects 200 mm clear of the notebook. Do not cover the ventilation slots in the notebook.

▶▶ Plug the car adapter's input connector into the car's cigarette lighter (2). The battery charges.

Removing and installing drives and batteries

Only use batteries designed for the this notebook.

Never use force when inserting or removing a battery.

Make sure that no foreign objects enter the slots.

Drives can only be installed in the right slide-in module.

Batteries can be installed in the left and right slide-in module.

Removing drive/battery

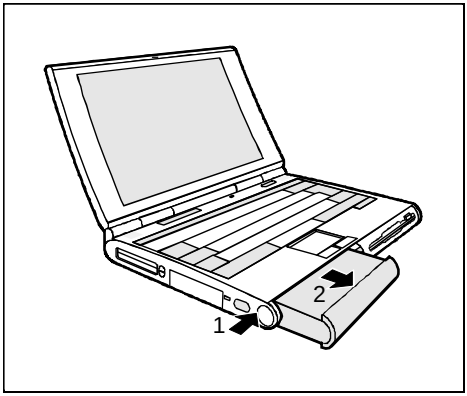

▶▶ Switch off the notebook. You can leave the notebook on provided the battery is not the notebook's only power source.

▶▶ Swing open the display.

▶▶ Place the notebook on a level surface.

▶▶ Press the battery's unlock button (1).

The release button for drives is located on the right side.

▶▶ Pull the battery (2) or, on the right side, the drive out of the slide-in module.

Installing drive/battery

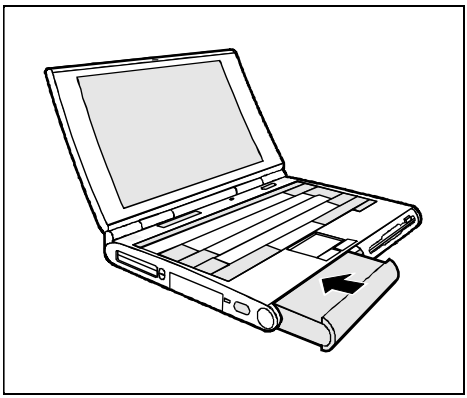

▶▶ Swing open the display.

▶▶ Place the notebook on a level surface.

▶▶ Place the battery in the slot so that the contacts enter first.

▶▶ Push the battery into the slot until you feel it locking into place.

Floppy disk drive

Use only the floppy disk drive designed for this notebook.
Do not use force when installing or removing the floppy disk drive.
Make sure that no foreign objects enter the slot.

The disk drive can also be removed or installed while in operation (but not when the disk drive is being accessed).

Connecting the floppy disk drive externally

▶▶ Open the cover (1).

▶▶ Connect the floppy disk drive externally to the parallel port via an adapter cable.

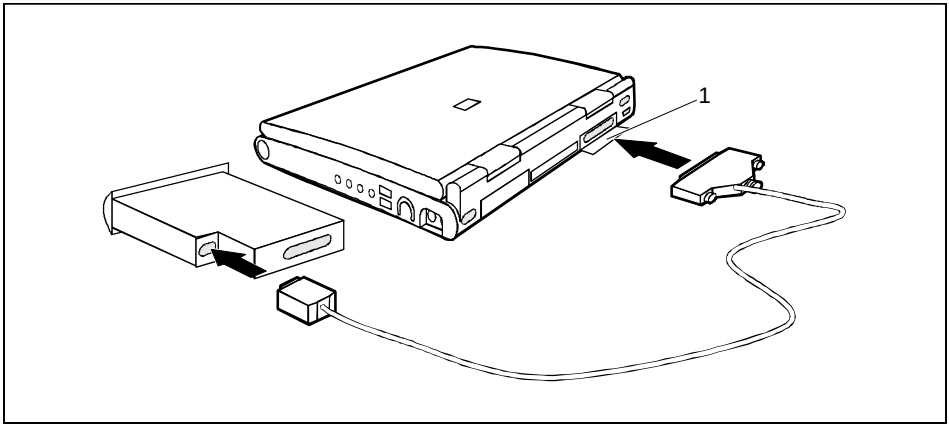

Working with floppy disks

Follow the instructions supplied by the vendor of the floppy disks.

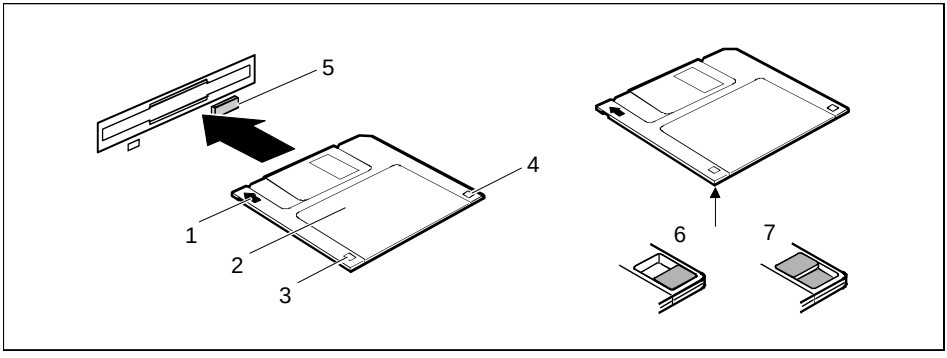

1 = Insertion direction
2 = Label area
3 = Write-protect slider
4 = Hole for recognition of 1.44 Mbytes disk
5 = Eject button for inserted floppy disks
6 = Floppy disk is write protected
7 = Floppy disk is not write-protected

▶▶ To insert a floppy disk, push it into the drive in the insertion direction (1) until it engages. The label should be facing upward.

▶▶ To remove the floppy disk, press the eject button (5).

The write-protect slider enables you to protect the data on the floppy disk from inadvertent overwriting or deletion.

▶▶ To protect the data on the floppy disk from being overwritten, push the write-protect slider to position (6). The hole is now visible.

▶▶ To remove write protection, push the slider to position (7). The hole is now covered.

Operating the CD-ROM drive and the DVD drive

This device contains a light-emitting diode, classified according to IEC 825-1:1993: LASER CLASS 1 (LUOKAN 1 LASERLAITE, KLASS 1 LASER APPARAT), and must not be opened.
There is an invisible laser radiation when the cover is open. Avoid exposure to the beam.
Avoid touching the surface of a CD. Handle CDs only by their edges!

Always store CDs/DVDs in their cases. You avoid dust contamination, scratches, bending or other damage.

Protect your CDs/DVDs from dust, mechanical vibration and direct sunlight!

Avoid storing a CD/DVD in areas subject to high temperatures or humidity.

You may use both 8-cm and 12-cm CDs.

When using CDs/DVDs of minor quality vibrations and reading errors may occur.

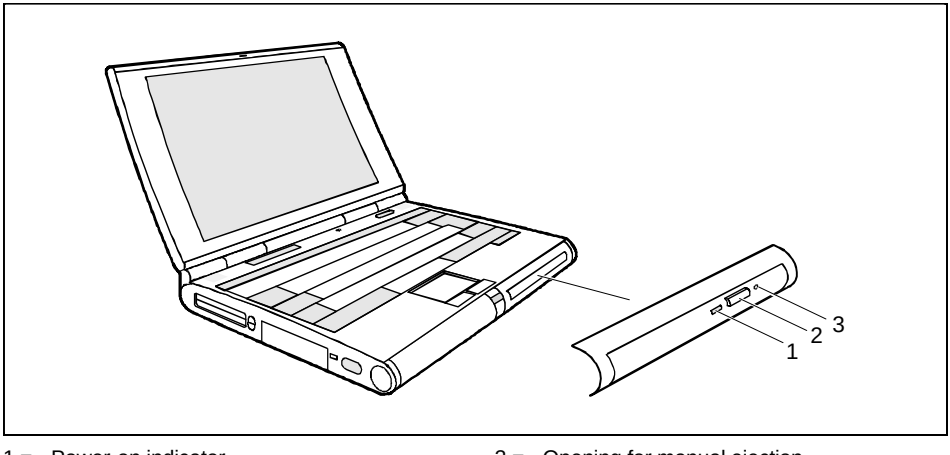

1 = Power-on indicator
2 = Insert/Eject button
3 = Opening for manual ejection

Power-on indicator

The power-on indicator (1) flashes when a CD/DVD is inserted. It goes out when the drive is ready for reading. It lights up when the drive is accessed.

If the power-on indicator does not go out after the CD/DVD is inserted, and continues to flash, the CD/DVD is probably damaged or dirty.

If the inserted CD/DVD vibrates and/or reading errors occur, then it may be possible to eliminate the vibrations or reading errors by reducing the rotating speed. Press the Insert/Eject button for roughly two seconds. Reducing the rotating speed also saves power.

Inserting or removing a CD/DVD

The notebook must be switched on.

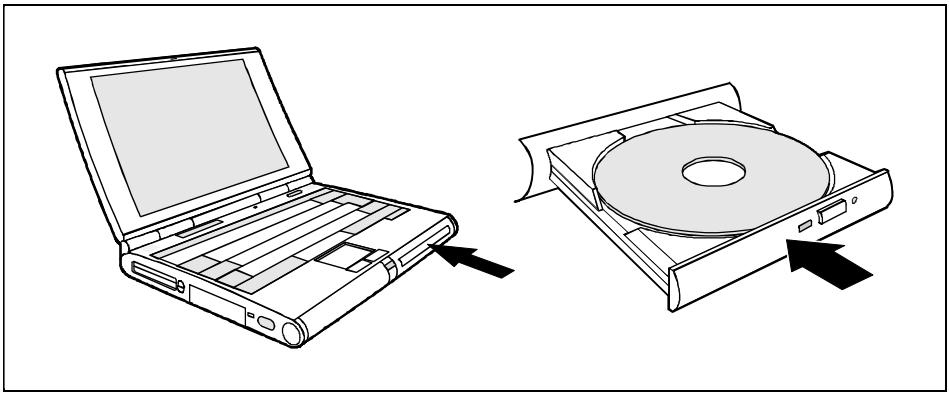

▶▶ Press the Insert/Eject button for roughly one second.

The CD/DVD tray opens.

▶▶ Pull the CD/DVD tray completely out.

▶▶ Place the CD/DVD in the CD/DVD tray with the labeled side facing upwards, and carefully push the CD/DVD into the mount or remove an inserted CD/DVD.

▶▶ Push the CD/DVD tray in until you feel it locking into place.

Manual removal (emergency removal)

In the event of a power failure or damage to the drive it may be necessary to manually remove the CD/DVD.

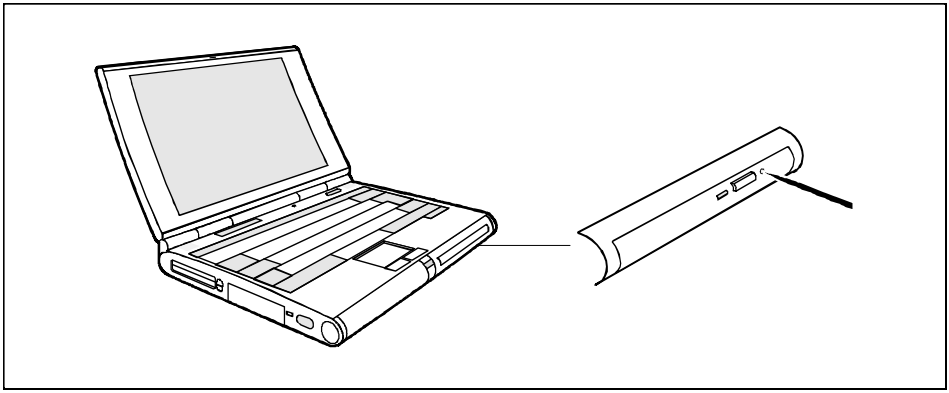

▶▶ Switch off the notebook.

▶▶ Press a piece of wire (e. g. a paper clip) firmly into the opening.

The CD/DVD tray is unlocked. You can now pull it out of the drive.

Operating the Zip drive

Before the Zip drive can be used, you must install the Iomega software on your notebook. To do this, use the Iomega installation disk provided and the Zip disk "Iomega Tools".

Installing the Iomega software

- ▶▶ Install the Zip drive in the right slide-in module.
- ▶▶ Connect the floppy disk drive to the parallel port (see "Connecting the floppy disk drive externally".
- ▶▶ Supply the notebook with power via the power adapter.
- ▶▶ Switch on the notebook and start Windows.
- ▶▶ Insert the Iomega installation floppy disk in the floppy disk drive.
- ▶▶ Start the *a:\setup.exe* program from the Iomega installation disk with *Start - Run* (Windows 9x) or *File - Run* (Windows 3.1).
- ▶▶ Follow the instructions on the screen.
- ▶▶ Switch on the notebook again and start Windows.
- ▶▶ Insert the Zip disk "Iomega Tools" in the Zip drive.
- ▶▶ Follow the installation instructions displayed on the screen to finish the software installation.

Reinstalling the Iomega software from the Zip disk

If the Zip drive of your notebook has already been assigned a drive letter in *My Computer* or in the *File Manager*, you can install the Iomega software directly from the Zip disk "Iomega Tools".

- ▶▶ Install the Zip drive.
- ▶▶ Switch on your notebook and start Windows.
- ▶▶ Insert the Zip disk "Iomega Tools" in the Zip drive.
- ▶▶ Open a search window for the Zip disk "Iomega Tools" with *My Computer* (Windows 9x).
- ▶▶ Double-click on *INSTALL.EXE*.
- ▶▶ Follow the installation instructions displayed on the screen to finish the software installation.

Operation

Use the Zip drive like any other drive on your system. To be able to access the Zip drive, you must insert a disk and click on the Zip disk symbol or the Zip drive letter. Save and copy the files on the Zip drive with the same method used for other drives on your system.

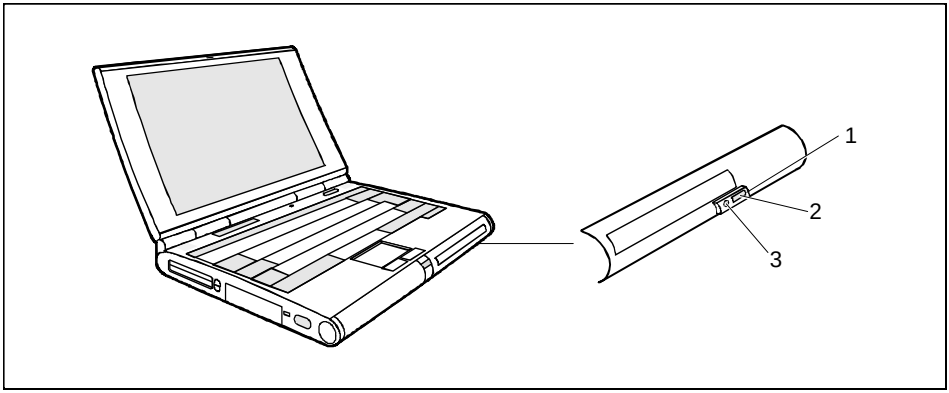

1 = Eject button
2 = Drive indicator
3 = Opening for manual ejection

Handling Zip disks

Follow the instructions supplied by the vendor of the Zip disks and the following notes:

Always switch your computer on before inserting a Zip disk.

Never use force when inserting and removing Zip disks.

Never use ordinary 3.5" disks or cleaning disks in your Zip drive. This will damage the Zip drive.

Do not move the protection against accidental contact on the Zip disk.

Protect your Zip disk from dust, mechanical vibration, heat, direct sunlight and strong magnetic fields!

Do not drop the Zip disk.

Do not use the Zip disk during large fluctuations in temperature or humidity.

Always transport the Zip disk in its protective cover.

Never clean the Zip drive with cleaning disks. Even just one attempt would destroy the read/write head in the Zip drive within 20 seconds.

Inserting the Zip disk

▶▶ Switch on your notebook.

▶▶ Insert the Zip disk in the Zip drive.

The green drive indicator glows briefly and then goes out again.

i Should the indicator continue to flash slowly, please press the eject button to remove the Zip disk and then insert it again.

Sleep mode of drive

The Zip drive is equipped with an automatic sleep mode. This is intended to reduce the power consumption, and thus to extend the operating time of the battery. In the sleep mode the speed of the disk is automatically reduced after an adjustable, inactive time (e.g. 3 minutes). If the drive is accessed, the speed of the disk is automatically increased again. The sleep mode time for the Zip drive is controlled via the system settings of your notebook.

Removing the Zip disk

▶▶ Gently push the eject button.

The green drive indicator lights up. After a few seconds the Zip disk is then ejected.

▶▶ Please lay the Zip disk in the protective case after removing it from the drive.

i When the notebook is switched off, the Zip drive automatically ejects the Zip disk.

Manual removal (emergency removal)

For normal removal of Zip disks, the notebook must be switched on. If the power supply of the notebook is interrupted, the Zip disk can be removed manually.

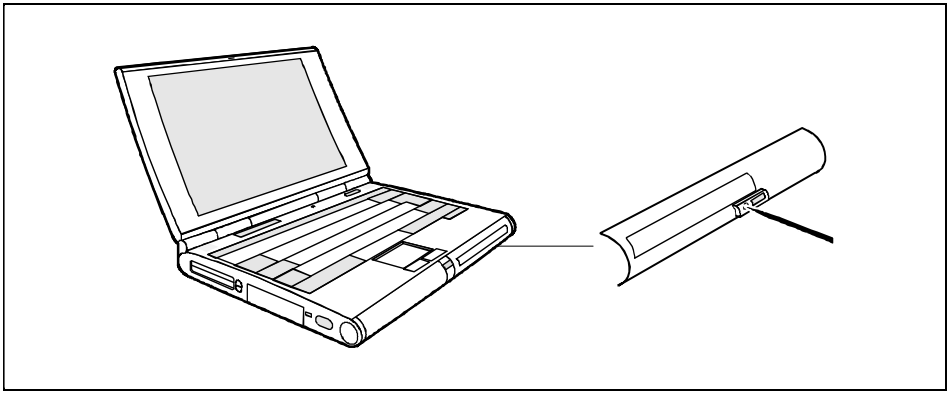

▶▶ Switch off the notebook.

▶▶ Press a piece of wire (e. g. a paper clip) firmly into the opening.

The Zip disk is unlocked. You can now pull it out of the drive.

Only use the disk emergency removal function when no battery is installed in the notebook and no power supply unit is connected to the notebook.

PC Cards

Two PC card slots (CardBus or PCMCIA) enable the notebook to operate two type II PC cards or one type III PC card.

The PC card must not consume more than 600mA (at +5V) or 60mA (at +12V).
Consult the documentation supplied by the PC card's manufacturer and follow the instructions provided.
Never use force when inserting or removing a PC card.
Make sure that foreign objects do not fall into the PC cards slot.

Zoomed video port

Your notebook is equipped with a Zoomed video port (ZV port). You can install an MPEG decoder or a TV and frame grabber card in a PC Card slot. Please contact one of your IT service partners, your local sales partner or office for advice on selecting a suitable ZV port card.

Installing a PC card

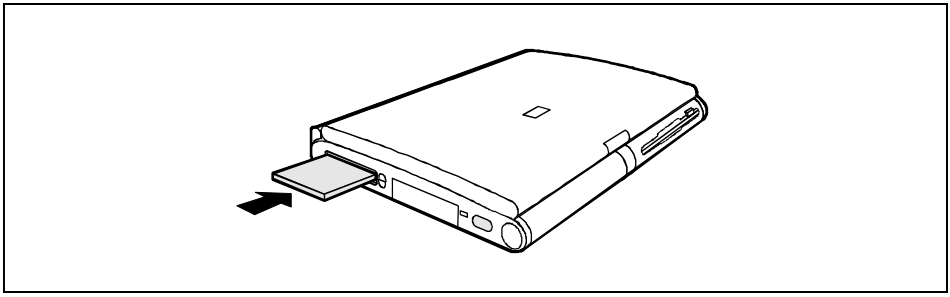

▶▶ Insert the PC card, contacts first, into the slot guides. The labeled side of the PC card must be facing upwards.

▶▶ Gently push the PC card into the slot until you feel it click into place.

i

Consult the documentation supplied with the PC card for information on how to install the necessary device drivers.
For further information refer to the information files (e.g. *.*TXT*, *.*DOC*, *.*WRI*, or *.*HLP*) provided with the PC card driver diskette or the information in the Windows 9x manual.
You can push the PC card slot eject buttons down flush into the notebook casing. Press the eject buttons until they snap in.

Removing PC cards

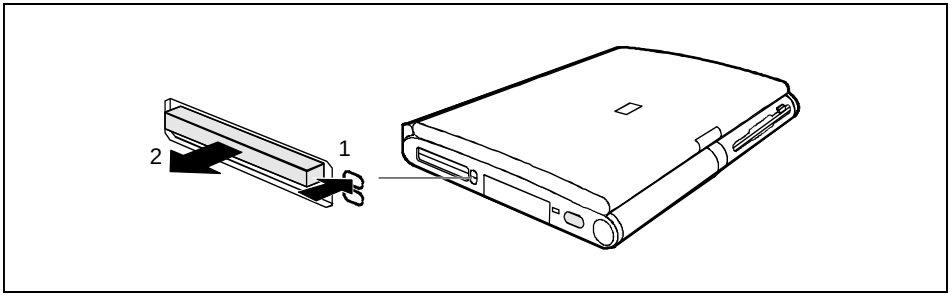

▶▶ Press the eject button (1). It will project further out of the notebook's case. If the eject buttons are pushed in flush with the notebook casing, they must first be snapped out. Press the eject buttons until they snap out.

▶▶ Slide the PC card out of the notebook (2).

Microphone and loudspeaker

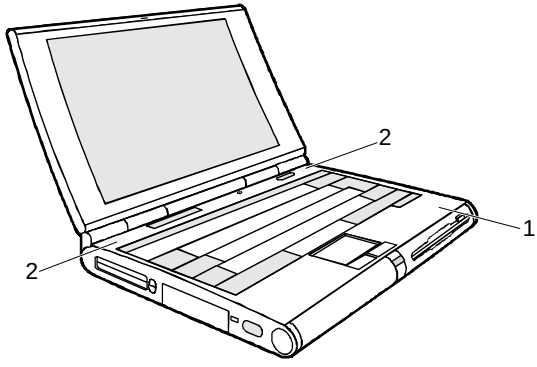

1 = built-in microphone 2 = built-in loudspeaker

Your notebook contains a built-in microphone (1) and a loudspeaker (2).

If you attach an external microphone, the built-in microphone is disabled. If you attach an external loudspeaker, the built-in loudspeaker is disabled.

Using the power-management features

The notebook uses less power when the power management features are enabled. You will then be able to work for longer before having to recharge the battery.

If you will not be using your notebook for a longer period, switch it off.
Reducing the brightness level of the display helps to reduce the amount of power consumed by the notebook.

i

If you enable one of the power-management options in the *Power* menu of the *BIOS Setup*, that option will still be enabled the next time you switch on your notebook.

Maximum Battery Life-Mode

The Maximum Battery Life mode uses all the available power-management features. The notebook uses little power and operates slightly slower than usual.

Activating

▶▶ In the *Power Setup* menu set the *Power Savings* field to *Maximum Battery Life*.

▶▶ Set the *PM Control* field in the *Power Setup* menu to *Always Enable* or to *Battery Powered Only*.

Exit

▶▶ In the *Power Setup* menu set the *PM Control* field to *Disabled*.

Standby mode

In Standby mode the notebook's system clock is suspended and its display and hard-disk motor are shut down.

Activating

▶▶ Press the key combination Fn + F3.

Exit

▶▶ Press any key to continue.

Automatic activation

If the notebook is running and is not used for a predefined period of time, it switches into Standby mode. Any input causes the notebook to come out of Standby mode.

▶▶ In the *Power Setup* menu set the *Power Savings* field to *Customize* and set the time which has to elapse before the notebook switches to Standby mode in the *Standby Timeout* field.

or

▶▶ In the *Power Setup* menu set the *Power Savings* field to *Maximum Performance* or *Maximum Battery Life*.

Suspend mode

In suspend mode, all current data (active programs, files) is saved to the hard disk or buffered in the memory, and the notebook is switched off.

Suspend to Disk

The active data can only be saved if sufficient space is available on the hard disk (at least the main memory size + 2 Mbytes). If the operating system Windows NT or OS/2 Warp is used, a FAT partition with this space must be created as a drive on the hard disk (see manual for respective operating system).

Suspend to DRAM

The current data is buffered in the memory (DRAM). The data is stored for as long as the notebook is supplied with energy. If the battery is full, the data is stored for a matter of days. Without a battery and without a power supply the data is stored for only around 5 minutes. Without a battery and without a power supply the current data is lost.

Activating

If your notebook is in Suspend mode:
- do not connect any external peripheral devices
- do not disconnect any external peripheral devices
- do not attempt to switch it on if the built-in battery is empty
- do not change or remove the floppy disk, if inserted
- do not add or remove RAM

do not add or remove any PC cards.

▶▶ Press the key combination Fn + F4.

or

▶▶ Hold the on/off switch pressed for approximately one second.

Exit

▶▶ Switch on the notebook.
The notebook reverts to the status it had prior to switching into Suspend mode.

Automatic activation

If the notebook is running and is not used for a predefined period of time, it switches into Suspend mode.

▶▶ In the *Power Setup* menu set the *Power Savings* field to *Customize* and set the time which has to elapse before the notebook switches to Standby mode in the *Suspend Timeout* field.

▶▶ Set the *Suspend Mode* field to *Save to Disk* or *Save to DRAM*.

or

▶▶ In the *Power Setup* menu set the *Power Savings* field to *Maximum Performance* or *Maximum Battery Life*.

▶▶ Set the *Suspend Mode* field to *Save to Disk* or *Save to DRAM*.

Display

Switching off the display does not affect running programs.

Activating

▶▶ Press any key to continue.

Deactivating

▶▶ Press the key combination Fn + F1.

Automatic powerdown

You set this function in the BIOS Setup.
If the notebook receives no input for a predefined period of time, the display switches off automatically. It switches on again automatically as soon as the notebook receives input.

▶▶ In the *Power Setup* menu set the *Power Savings* field to *Customize* and set the time which has to elapse before the display switches off in the *Video Timeout* field.

or

▶▶ In the *Power Setup* menu set the *Power Savings* field to *Maximum Performance* or *Maximum Battery Life*.

Hard disk's power-management feature

If the hard disk is not accessed for a predefined period of time, its motor switches off automatically. It switches on again automatically the next time the hard disk is accessed.

Activating

▶▶ In the *Power Setup* menu set the *Power Savings* field to *Customize* and set the time which has to elapse before the motor of the hard disk switches off in the *Hard Disk Timeout* field.

or

▶▶ In the *Power Setup* menu set the *Power Savings* field to *Maximum Performance* or *Maximum Battery Life*.

Loudspeaker

Deactivating

▶▶ Press the key combination Fn + F6.

Activating

▶▶ Press the key combination Fn + F6.

Deactivating in BIOS Setup

▶▶ In the *Advanced Setup Integrated Peripherals* menu set the *On Board Audio* field to *Disabled*.

Volume adjustment

Increasing the volume

▶▶ Press the key combination [Fn] + [F7].

Reducing the volume

▶▶ Press the key combination [Fn] + [F8].

You can also adjust the volume of the loudspeaker in the audio program (e.g. mixer) or in the application program using the audio functions.

Changing display settings

You configure the basic display settings in the *Main Setup* (see chapter "Settings in BIOS Setup").

You can change the settings using key combinations.

Switching between internal and external display

If an external monitor is connected to your notebook, you can switch between different display options. You can opt to use:

- just the notebook's internal display
- just the external display
- both the internal and the external display
- just the television
- both the internal display and the television.

The setting you select with *Display Device Selection* in *Main Setup* is always active when you switch on your notebook.

▶▶ Press the key combination [Fn] + [F12] until you find the display option you require.

Settings in BIOS Setup

In *BIOS Setup* you can set the system functions and the hardware configuration of the notebook.

When it is supplied, the notebook is set to factory default settings. You can change these settings in *BIOS Setup*. *Any changes you make take effect as soon as you save and quit the BIOS Setup*.

The *BIOS Setup* program contains the following menus:

- *Main Setup*: for system settings as time, date, ports and pointing device
- *Advanced Setup*: for extended functions
- *Security Setup*: for setting up the security features
- *Power Setup*: for setting up the power-management features
- *Docking Setup*: for configuring the MobiDock
- *Boot Setup:* for configuring the boot sequence
- *Exit:* Exiting *BIOS Setup*

Starting BIOS Setup

▶▶ Restart the notebook (switching on/off or warm boot).

▶▶ When the message `Press F2 for Setup` appears, press the key F2.

i

If a supervisor or user password has been defined:

▶▶ Enter the supervisor or user password and press the Enter key.

▶▶ If you have forgotten the user password contact your system administrator or contact our customer service. If you have forgotten the supervisor password contact our customer service.

If access to the setup is obtained with the user password, *BIOS Setup* settings in the *Advanced*, *Security*, *Docking* and *Boot* menus are not possible.

The *Main* menu is displayed on the screen.

```
     Phoenix BIOS Setup
  Main    Advanced    Security    Power    Docking     Boot    Exit

  System Time:                [08:00:00]          Item Specific Help
  System Date:                [12/12/1997]

  Diskette A:                 [1.44M, 3½ ]

▶ IDE Adapter 0 Master (C: 810 MB)
▶ IDE Adapter 1 Master        [None]
  Display Device Selection:   [LCD & CRT]
  TV Mode:                    [PAL]
▶ Boot Options

  System Memory:            640 KB
  Extended Memory:          15 MB

F1  Help  ↑↓  Select Item  Space  Change Values      F9 Setup Defaults
ESC Exit  ←→  Select Menu  Enter  Select ▶ Sub-Menu  F10 Previous Values
```

Example for *Main* menu

Operating BIOS Setup

- ▶▶ Use the cursor key ← or → to select the menu you wish to access to make changes.
- ▶▶ Press the Enter key. The menu is displayed on the screen.
- ▶▶ Use the cursor key ↑ or ↓ to select the field you wish to change.
- ▶▶ Press the Space key to change the value of an entry.
  You must enter characters in the *Supervisor Password*, *User Password* and *Docking Station Password* fields.
- ▶▶ Repeat the last two steps described for all the fields you wish to change.
- ▶▶ Make a note of the changes you have made (here in this manual, for example).
- ▶▶ Using the F9 function key, you can load the default settings for the Setup menu you are currently in.
- ▶▶ With the F10 key all the values of the menu you are currently in are restored.

Main menu - Making system settings

In the *Main* menu you can set up the following:

- time (in the field marked *Time*)
- date (in the field marked *Date*)
- hard disk settings (in the two fields marked *IDE Adapter*)
- display device (in the field marked *Display Device Selection)*
- Pointing elements (in the field marked *PS/2 Pointing Device*)
- System startup options (in the field marked *Boot Options*)

```
     Phoenix BIOS Setup
  Main    Advanced    Security    Power    Docking     Boot    Exit

  System Time:                [08:00:00]          Item Specific Help
  System Date:                [08/14/1998]

  Diskette A:                 [1.44M, 3½ ]

▶ IDE Adapter 0 Master (C: 810 MB)
▶ IDE Adapter 1 Master         [None]
  Display Device Selection:   [LCD & CRT]
  TV Mode:                    [PAL]
▶ Boot Options

  System Memory:            640 KB
  Extended Memory:          15 MB

F1  Help  ↑↓  Select Item  Space  Change Values      F9 Setup Defaults
ESC Exit  ←→ Select Menu  Enter  Select ▶ Sub-Menu  F10 Previous Values
```

Example for *Main* menu

System Time/System Date

System Time indicate the time of the device. If you change the time setting, enter the time in the format *HH:MM:SS* (hours:minutes:seconds)

System Date indicate the date of the device. If you change the date setting, enter the date in the format *MM.DD.YYYY* (month/day/ year)

Diskette A: - floppy disk drive

This field shows the type of the built-in floppy disk drive.

360KB - 5 1/4", 720KB - 3 1/2", 1.2MB- 51/4", ***1.44MB - 3 1/2"****, 2.88MB - 3 1/2"*
The entry depends on the floppy disk drive installed.

Not Installed A floppy disk drive is not installed.

IDE Adapter 0 Master/IDE Adapter 1 Master - hard disk drive

These two fields call the submenu to make corresponding settings of the IDE hard disk drives.

> **i** You should change the default settings only if you are connecting an additional IDE drive (e.g. CD ROM drive)

The following description of the setting options for *IDE Adapter 0 Master* also applies to *IDE Adapter 0 Slave*, *IDE Adapter 1 Master* and *IDE Adapter 1 Slave*. The default settings depend on the installed drive.

```
    Phoenix BIOS Setup
Main

        IDE Adapter 0 Master (C: 814 MB)          Item Specific Help

Type Fixed Disk:       [Press Enter]

Type:                      [Auto]  814 Mb
Cylinders:                   1579
Heads:                         16
Sectors:                       63
Maximum Capacity:

Multi-Sector Transfers:    16 Sectors
LBA Mode Control:           Enabled
32 Bit I/O:                [Enabled]
Transfer Mode:              Fast PIO 3
Ultra DMA Mode:            [Disabled]

F1  Help  ↑↓  Select Item  Space  Change Values      F9 Setup Defaults
ESC Exit  ←→  Select Menu  Enter  Select ▶ Sub-Menu  F10 Previous Values
```

Example for the submenu *IDE Adapter 0 Master*

If you have installed a new unformatted IDE hard disk drive, you should mark the *Type Fixed Disk* field and press the Enter key. This has the effect of setting the optimum values for the IDE hard disk drive. You can change these values if you set the *Type* field to *User*.

If you install a formatted hard disk drive, the values are set automatically.

Type - Hard Disk Type

This field is used to specify the type of hard disk drive.

Auto If the hard disk supports this mode, the setup menu reads the hard disk parameters from the disk itself. You do not need to select the parameters yourself.

User You can enter the hard disk parameters yourself.
If you have set the hard disk parameters with *Autotype Fixed Disk*, you can only reduce the values.

None You cannot change the hard disk parameters (*Cylinders, Heads, Sector/Track* and *Write Precomp.*). An IDE drive has not been installed.

CD If, for example, a CD-ROM drive is inserted into the notebook, or a CD-ROM drive is built into the MobiDock, this item enables you to boot the system from the CD-ROM drive.

Cylinders, Heads, Sectors/Track, Write Precomp - hard disk parameter

These hard disk parameters are set in accordance with the IDE hard disk drive. If you want to change the hard disk parameters manually, set the *Type* field to *User*.

Multi-Sector Transfers - Block Transfer

This field specifies the transfer mode for the IDE hard disk drive.

Disabled One block is transferred for each interrupt.

2 Sectors, *4 Sectors*, *6 Sectors*, *8 Sectors*, *16 Sectors*
The set number of blocks (sectors) is transferred for each interrupt. This enhances performance.

LBA Mode Control - Addressing

This field enables and disables the LBA (Logical Block Addressing) mode. If a hard disk supports LBA mode, the LBA mode allows you to set up and use hard disks with a capacity of more than 528 Mbytes.

The default entry depends on the installed IDE hard disk drive. Change the default entries only if you are installing another hard disk drive.

You may only use IDE drives in the LBA mode selected when they were set up. In other words, if you set up a hard disk with LBA mode disabled, you may only operate the hard disk with LBA mode disabled.

Disabled The BIOS uses the hard disk parameters and supports a maximum capacity of 528 Mbytes.

Enabled If the hard disk supports LBA and it has a capacity of more than 528 Mbytes, the BIOS translates the hard disk parameters, allowing the disk's full capacity to be used. This allows the disk's full capacity to be used.

32 Bit I/O - Access width for data transfer

This field specifies the I/O access width of data transmission between the processor and the IDE controller.

Enabled	Data transfer is performed with 32-bit I/O commands. This enhances performance.
Disabled	Data transfer is performed with 16-bit I/O commands.

Transfer Mode

This field specifies the transfer mode for the IDE hard disk drive.

Standard	0,8 Mbytes/s to 2 Mbytes/s
Fast PIO 1	2 Mbytes/s to 4 Mbytes/s
Fast PIO 2	4 Mbytes/s to 5 Mbytes/s
Fast PIO 3	5 Mbytes/s to 10 Mbytes/s
Fast PIO 4	10 Mbytes/s to 13.3 Mbytes/s

Ultra DMA Mode - Access Speed

This field specifies the access speed for the IDE hard disk drive.

Mode 0	slow access speed
Mode 1	middle access speed
Mode 2	fast access speed

Display Device Selection

This field is used to specify the display device.

LCD&CRT	The notebook's internal display and the external display are used.
CRT	Just the external display is used.
LCD	Just the internal display is used.
TV	Output is carried out on the TV.
LCD & TV	The notebook's internal display and the television are used.

If the notebook is connected to a MobiDock and an external display is connected to the MobiDock, the external display is used regardless of the setting in the *BIOS Setup* (CRT only).

TV Mode

This field is used to specify the display device.

PAL	Output on the TV is in the PAL standard.
NTSC	Output on the TV is in the NTSC standard.

Boot Options - System startup options

This field calls the submenu to select the settings for the system startup of the device.

```
    Phoenix BIOS Setup
Main

        Boot Options                          Item Specific Help

Summary screen:    [Enabled]
Floppy check:      [Disabled]
Quiet Boot:        [Enabled]

F1  Help  ↑↓  Select Item  Space  Change Values      F9 Setup Defaults
ESC Exit  ←→  Select Menu  Enter  Select ▶ Sub-Menu  F10 Previous Values
```

Example for submenu *Boot Options*

Summary screen - Displaying the configuration at system startup

This field is used to specify whether the configuration is displayed at system startup.

Enabled The configuration is displayed when the device is switched on.

Disabled The configuration is not displayed when the device is switched on.

Floppy check - Checking the disk drive

This field can make the system startup faster.

Enabled The entire notebook configuration is checked when the notebook is switched on.

Disabled The disk drive is not checked in the self-test when the device is switched on.

Quiet Boot

Instead of a start information a logo is displayed on the screen.

Enabled The logo is displayed on the screen. A switch to the start information is made if you press the [Esc] key or if errors occur.

Disabled The start information is displayed on the screen.

System Memory - Main memory

This field indicates the size of the available base memory below 1 Mbyte.

Extended Memory

This field indicates the size of the memory above 1 Mbyte.

Advanced menu - Advanced system settings

Change the default settings only for special applications. Incorrect settings can cause malfunctions.

You can make the following system settings in the *Advanced* menu:

- Ports and controllers (in the *Integrated Peripherals* submenu)
- PCI configuration (in the *PCI Devices* submenu)
- Second-level cache (in the *Memory Cache* submenu)
- Plug&Play functionality (in the *Plug and Play O/S* field)
- Configuration data (in the *Reset Configuration Data* field)
- Hard disk access (in the *Large Disk Access Mode* field)

```
      Phoenix BIOS Setup
  Main    Advanced    Security    Power    Docking     Boot    Exit

                    Warning!                          Item Specific Help
Setting items on this menu to incorrect values      ____________________
may cause your system to malfunction.

▶ Integrated Peripherals
▶ PCI Devices

  Plug & Play O/S:              [Yes]
  Enable ACPI                   [No]
  Reset Configuration Data:     [No]

  Large Disk Access Mode:       [DOS]

F1  Help  ↑↓  Select Item  Space  Change Values      F9 Setup Defaults
ESC Exit  ←→  Select Menu  Enter  Select ▶ Sub-Menu  F10 Previous Values
```

Example for the *Advanced* menu

Integrated Peripherals - Ports and controllers

This field calls the submenu to make the settings for the ports and controllers.

```
      Phoenix BIOS Setup
         Advanced

        Integrated Peripherals                    Item Specific Help

 PS/2 Mouse                  [Auto Detect]
 COM port:                   [Enabled]
   Base I/O Address:         [3F8 IRQ4]
 IrDA port:                  [Auto]
   Mode:                     [IrDA]
 Parallel port               [Auto]
   Mode:                     [Bi-Directional]
 Diskette Controller:        [Enabled]
 On board IDE Adapter:       [Both]
 On Board Audio:             [Auto]
   Base I/O Address:         [220]
   IRQ Channel:              [IRQ 5]
 Capture DMA channel:        [DMA 1]
 Playback DMA channel:       [DMA 3]
   FM I/O:                   [388]
   MPU I/O:                  [300]
 Joystick:                   [Enabled]
   FM I/O:                   [201]

 QuickPort Audio
   Speaker:                  [Notebook]
   Microphone:               [Notebook]

F1  Help  ↑↓  Select Item  Space  Change Values      F9 Setup Defaults
ESC Exit  ←→  Select Menu  Enter  Select ► Sub-Menu  F10 Previous Values
```

Example for the submenu *Integrated Peripherals*

PS/2 Mouse

This field determines whether the PS/2 mouse or the touchpad is enabled on the notebook.

Enabled The internal touchpad is activated if no PS/2 mouse is connected. If a PS/2 mouse is connected when the system is started up, the PS/2 mouse is activated and the internal touchpad is deactivated.

Disabled The internal touchpad and the PS/2 mouse are disabled.
You must set *Disabled* if you want to use an external serial mouse.

Auto Detect The internal touchpad is activated if no PS/2 mouse is connected. If a PS/2 mouse is connected when the system is started up, the PS/2 mouse is activated automatically and the internal touchpad is deactivated.

COM port - Serial port

This field switches the serial port on or off.

Enabled The serial port can be set to a certain address and interrupt in the *Base I/O Address* field.

Auto The serial port is automatically set to the next available combination (address, interrupt).

Disabled The serial port is disabled.

Base I/O Base Address - Address of the serial port

i This field is only visible when the *Com Port* field is set to *enabled*.

This field selects the address and the interrupt used to access the relevant serial interface.

3F8h IRQ4, *2F8h IRQ3*, *3E8h IRQ4*, *2E8h IRQ3*, *3F8h IRQ5*, *2F8h IRQ7*, *3E8h IRQ5*, *2E8h IRQ7*
The serial port is set to the shown address and interrupt.

IrDA port - Infrared interface

This field switches the infrared interface on or off.

If you wish to use infrared data transfer, an infrared interface with the associated hardware must be incorporated in the device.

Enabled The infrared interface can be set to a certain address and interrupt in the *Base I/O Address* field.

Auto The infrared interface is automatically set to the next available combination (address, interrupt).

Disabled The infrared interface is disabled.

Base I/O Address - Address of the infrared interface

i This field is only visible when the *IrDA Port* field is set to *Enabled*.

This field selects the address and the interrupt used to access the relevant IrDA interface.

3F8h IRQ4, *2F8h IRQ3*, *3E8h IRQ4*, *2E8h IRQ3*, *3F8h IRQ5*, *2F8h IRQ7*, *3E8h IRQ5*, *2E8h IRQ7*
The IrDA interface is set to the shown address and interrupt.

Mode - Infrared Interface Mode

This field sets the mode for the infrared interface.

IrDA Standard IrDA is set.

Ask-IR A data transfer rate of 38,4 kbit/s is set.

FIR Fast IrDA is set.

Parallel port

This field selects the address and the interrupt used to access the relevant parallel port.

Enabled The parallel port can be set to a certain address and interrupt in the *Base I/O Address* field.

Auto The parallel port is automatically set to the next available combination (address, interrupt).

Disabled The parallel port is disabled.

Base I/O Address - Address of the parallel port

i This field is only visible when the *Parallel Port* field is set to *enabled*.

This field selects the address and the interrupt used to access the relevant parallel interface.

378h IRQ7, *278h IRQ5, 3BCh IRQ7, 378h IRQ5*
The parallel port is set to the shown address and interrupt.

Mode - parallel data transmission mode

This field is used to specify whether the parallel interface is to be used as a bi-directional input/output port or just as an output port. *ECP* and *EPP* transfer modes allow faster transfer rates of 2 and 2.4 Mbytes/s. These modes will only work with peripheral devices which support them. In addition, the field *Parallel* must be set to *378h* or *278h*.

Bi-Directional
Data can be transferred in both directions across the port.

EPP Fast transfer mode (up to 2 Mbytes/s), can output and receive data. The mode requires a peripheral device which supports the EPP (Enhanced Parallel Port) transfer mode.

ECP Fast transfer mode (up to 2.4 Mbytes/s), can output and receive data. The mode requires a peripheral device which supports the ECP (Enhanced Capability Port) transfer mode.

Output Only *Bi-Directional*
The port functions as an output port only.

Diskette Controller

This field is used to enable and disable the built-in floppy disk controller on the system board.

Enabled The floppy disk controller is enabled - IRQ 6 is used.

Disabled The floppy disk controller is disabled - IRQ 6 is free.

On-board IDE Adapter - IDE hard disk controller

This field is used to enable and disable the built-in IDE hard disk drive controller of the notebook.

Both The drives in the notebook are operated via the primary and secondary IDE channel. IRQ14 and IRQ15 are occupied. The hard disk is operated on the primary IDE channel, the CD-ROM drive on the secondary IDE channel.

Auto If the notebook is connected to a MobiDock, the hard disk in the notebook is operated on the primary IDE channel, and the IDE drives in the MobiDock on the secondary IDE channel. The CD-ROM drive in the notebook is switched off. IRQ14 and IRQ15 are occupied. If *Auto* is set, the notebook can only be connected to a MobiDock while switched off (cold docking). It is not possible to connect the notebook during operation (hot docking) or while a drive is being accessed (warm docking).
If the notebook is not connected to a MobiDock, *Auto* corresponds to the entry *Both*.

Primary The primary IDE hard disk drive controller is enabled. IRQ14 is occupied.

Disabled The IDE hard disk drive controller of the notebook is disabled.

On Board Audio - Audio Controller

This field is used to enable and disable the built-in audio controller on the system board.

Auto The chip is enabled and the configuration is automatically carried out.

Enabled The chip is enabled

Disabled The chip is disabled

i The following fields are only visible if the *On Board Audio* field is set to *Enabled*.

Base I/O Address

The I/O channel can be set to various basic addresses.

220h, *240h*, *260h*, *280h*
The I/O channel is set to the address displayed.

IRQ Channel - Interrupt channel

This field is used to specify the interrupt for the audio controller. The interrupt can be set to various IRQs.

IRQ5, *IRQ7*, *IRQ9*, *IRQ10;IRQ11*
The wave interrupt is set to the interrupt displayed.

Capture DMA Channel - DMA channel for capture

The DMA channel for capture can be set to various values.

DMA CH1, *DMA CH0*, *DMA CH3*
The DMA channel is set to the value displayed.

Playback DMA Channel - DMA channel for playback

The DMA channel for playback can be set to various values.

DMA CH0, *DMA CH1*, ***DMA CH3***
The DMA channel is set to the value displayed.

FM I/O - Base address for the FM synthesizer

The I/O address of the FM synthesizer can be set to different values.

388h, *390h*, *398h*, *3A0h*
The I/O address is set to the value displayed.

MPU I/O - Base address for the MIDI interface

The I/O address of the MIDI port can be set to different values.

330h, ***300h***, *310h 320h*
The I/O address is set to the value displayed.

Joystick - Joystick Port

The joystick port and be enabled and disabled.

Auto The joystick is enabled and the configuration is automatically carried out.

Enabled The joystick is enabled.

Disabled The joystick is disabled.

FM I/O - Base address for the joystick

i This field is only visible when the *Joystick* field is set to *enabled*.

200h, 201h The joystick is enabled and set to the I/O address displayed.

QuickPort Audio - Audio options for QuickPort

The fields set the audio options for the QuickPort.

i QuickPort Audio and the accompanying fields are only visible if the notebook is connected to a QuickPort Plus or a QuickPort S.

Speaker - Selecting the loudspeaker

Notebook The internal loudspeaker on the notebook is switched on.

QuickPort Only the external loudspeakers connected to the QuickPort are switched on.

Microphone - Selecting the microphone

Notebook The internal microphone on the notebook is switched on.

QuickPort Only the external microphone connected to the QuickPort is switched on.

PCI Devices - PCI configuration

This field calls the submenu to select the settings for the PC card controller and the PCI slots.

```
Phoenix BIOS Setup
Advanced

PCI Devices                                   Item Specific Help

Cardbus Controller Select:   [External/Internal]

PCI IRQ line 1:            [9]
PCI IRQ line 2:            [9]
PCI IRQ line 3:            [10]

F1  Help  ↑↓  Select Item  Space  Change Values      F9 Setup Defaults
ESC Exit  ←→  Select Menu  Enter  Select ▶ Sub-Menu  F10 Previous Values
```

Example for submenu *PCI Devices*

> **i** If you use an operating system that does not support plug & play, you must select *No* for the *Plug&Play O/S* field in the *Advanced* menu to ensure that the PC card controller is switched on by the system BIOS.

Cardbus Controller Select - Settings of the PC Card Controller

> **i** This setting is only effective when a QuickPort Plus or a QuickPort S is connected. If the QuickPort is not connected, the controller in the notebook is always configured to the compatible address 3E0h.

This field specifies the order of the CardBus controller

External/Internal
: The controller in the QuickPort Plus/S is configured to the compatible address 3E0h. A secondary address is assigned to the controller in the notebook.

Internal/External
: The controller in the notebook is configured to the compatible address 3E0h. A secondary address is assigned to the controller in the QuickPort Plus/S.

External only
: The controller in the QuickPort Plus/S is configured to the compatible address 3E0h. The controller of the notebook is disabled.

PCI IRQ line 1,2,3 - Setting the PCI interrupt

This field is used to specify which PCI interrupt is to be switched to which ISA interrupt.

A multifunctional PCI board can use all PCI interrupts, if need be.

If you use a setting other than *Auto Select*, the Plug&Play functionality of the system BIOS for PCI boards is deactivated.

For monofunctional PCI boards, the PCI interrupt line 1 is assigned to the PCI slot1 and the PCI interrupt line 2 to the PCI slot 2.

Auto The PCI interrupt is automatically assigned in accordance with the plug & play guidelines.

3, 4, 5, 7, 9, 10, 11
The PCI interrupt is switched to the selected ISA interrupt. You may not select an ISA interrupt that is used by a component on the system board (e.g. controller) or an ISA board.

Disabled No PCI interrupt is used for the PCI board in the assigned PCI slot. You should only select this setting if you are sure that the corresponding PCI board does not require an interrupt. Otherwise, errors may occur.

i

PCI IRQ line 1 is used by the following PCI boards: PC card controller in the notebook and in QuickPort Plus, SCSI controller in the MobiDock.

PCI IRQ line 1 or line 2 is used by one of the PCI boards in the MobiDock. This depends on the PCI board.

PCI IRQ line 2 is used by both CardBus controllers (notebook and MobiDock.
PCI IRQ line 3 is used by the USB controller in the notebook.

Plug & Play O/S

This field is used to define the Plug&Play functionality. Plug&Play means that inserted modules are automatically recognized and installed if they support Plug&Play.

Yes The operating system takes over some of the Plug&Play functions. You should select this setting only if the operating system (e.g. Windows 9x) supports Plug&Play.

No The BIOS takes over the complete Plug&Play functionality.

Enable ACPI - ACPI functionality

This field is used to define the ACPI functionality.

Yes Only set it to *Yes* when the operating system supports ACPI (Windows98).

No No ACPI function is active.

Reset Configuration Data

This field is used to specify whether the configuration data is reset and reinitialized when the system is started.

No The Plug&Play functionality ascertains the current configuration data and uses it to initialize the installed modules and drives. There is no update when the system is started.

Yes When the system is started the old configuration data is reset. The new configuration data is determined by means of the Plug&Play functionality. The mounted modules and drives are then initialized with this data.

i This field only takes effect if the notebook is connected to a MobiDock.

Large Disk Access Mode - Hard disk access

This field is used to specify the type of hard disk access for large hard disks (more than 1024 cylinders, 16 heads). The default setting depends on the operating system used.

DOS the operating system uses MS-DOS-compatible hard disk accesses.

Other If the operating system uses hard disk accesses which are not MS-DOS-compatible (e.g. Novell, SCO Unix).

Security menu - Setting up the security features

You can set up the following security features in the *Security* menu:

- Setting a supervisor password (in the field *Set Supervisor password*)
- Setting a user password (in the field *Set User password*)
- Set a hard disk password (in the *Hard Disk Security* submenu)
- Activating the password query for system startup (in the field *Password on boot*)
- Blocking access to the diskette (in the field *Diskette access*)

```
      Phoenix BIOS Setup
  Main    Advanced    Security    Power    Docking     Boot    Exit

 Supervisor Password is    Disabled                 Item Specific Help
 User Password is          Disabled
 Set Supervisor Password  [Press Enter]
 Set User Password         Press Enter

▶ Hard Disk Security

 Password on boot:        [Disabled]

 Diskette access:         [User]

 Flash Update:            [Disabled]

F1  Help  ↑↓  Select Item  Space  Change Values      F9 Setup Defaults
ESC Exit  ←→  Select Menu  Enter  Select ▶ Sub-Menu  F10 Previous Values
```

Example for *Security* menu

Supervisor Password is/User Password is - Password display

Disabled, *Enabled*

These fields indicate whether the appropriate password is installed or not.

Set Supervisor Password

This field enables you to install the supervisor password.

Set User Password

This field enables you to install the user password. However, you can only assign the user password if a supervisor password has already been assigned.

Hard Disk Security - Setting hard disk passwords

This field calls the submenu to make the settings for the hard disk passwords.

```
      Phoenix BIOS Setup
         Security

         Hard Disk Security                    Item Specific Help

 HD1 Password is:         Disabled

 Set HD1 password:        [Press Enter]

F1  Help  ↑↓  Select Item  Space  Change Values      F9 Setup Defaults
ESC Exit  ←→  Select Menu  Enter  Select ► Sub-Menu  F10 Previous Values
```

Example for submenu *PCI Devices*

HD1 Password is

Disabled, *Enabled*
This field indicates whether the appropriate password is installed or not.

Set HD1 password

This field enables you to install the hard disk password. The hard disk password only applies to the hard disk in the notebook and not the one in the MobiDock. If a hard disk password has already been set, you must enter the set password before you can change or delete it.

Password on boot - Password query during system startup

Requirement: the supervisor password or user password must be installed.

This field is used to specify whether the password is to be queried when the operating system is booted.

Disabled The password is queried only when *BIOS Setup* is called.

Enabled The password is queried before the operating system is booted and when *BIOS Setup* is called.

Diskette access - Access privilege for disk drive

This field is used to specify whether diskettes can be accessed.

User Both users and the supervisor can access diskettes.

Supervisor Only a supervisor can access diskettes.

Flash update - Permission for BIOS update

This field specifies whether a BIOS flash update may be carried out on the notebook.

Disabled BIOS flash update not possible.

Enabled BIOS flash update is permitted.

Power menu - Setting energy saving functions

You can set up the following energy saving functions in the *Power* menu

- Effectiveness of energy saving functions (in the *PM Control* field)
- Extent of energy saving functions (in the *Power Savings* field)
- Standby timer (in the *Standby Timeout* field)
- Suspend timer (in the *Suspend Timeout* field)
- Automatic display power-down in the *Video Timeout* field)
- Select the mode of the LID switch (in field of *LID switch*)
- Enter suspend mode if the battery capacity is low (in the *Battery Low Suspend* field)
- Suspend mode selection (in the *Suspend Mode* field)
- Resume condition selection
  (in the *Resume On Modem Ring*, *Resume On Time*, *Resume Time* fields)

```
      Phoenix BIOS Setup
 Main    Advanced    Security    Power    Docking    Boot    Exit

 PM Control:              [Battery Powered Only]      Item Specific Help
 Power Savings:           [Customize]

 Standby Timeout:         [5 min]
 Auto Suspend Timeout:    [10 min]

 Hard Disk Timeout:       [2 min]
 Video Timeout:           [2 min]
 LID Switch:              [LCD off]
 Battery Low Suspend:     [Enabled]

 Suspend Mode:            [Save to DRAM]
 Resume On Modem Ring:    [OFF]
 Resume On Time:          [OFF]
 Resume Time:             [00:00:00]

 Cooling Control:         [Performance]

F1  Help  ↑↓  Select Item  Space  Change Values      F9 Setup Defaults
ESC Exit  ←→  Select Menu  Enter  Select ▶ Sub-Menu  F10 Previous Values
```

Example for menu *Power*

i

If the field *Enable ACPI* is set to *Yes*, the energy saving functions are not controlled by the BIOS, but instead by the operating system.

PM Control - Effectiveness of the energy saving functions

This field determines when the energy saving functions are active.

Battery Powered Only
The energy saving functions are only enabled for battery operation.

Always Enable
The energy saving functions are always enabled (battery and mains operation).

Disabled None of the energy saving functions is effective.

Power Savings - Extent of energy saving functions

This field is used to define the extent of the following energy saving functions.

Customize The functions set in the fields *Standby Timeout, Suspend Timeout, Hard Disk Timeout, Video Timeout, Hardware Dozemode* and *Battery Low Suspend* are effective in power management

Maximum Performance/Maximum Battery Life
These entries call predefined settings, thus determining the extent of energy saving.

Disabled None of the energy saving functions is effective.

Standby Timeout

This field can only be changed, if the *PowerSaving* field is set to *Customize*.

1, 2, ***5****, 10, 20, 30 min*
The system switches to standby mode after the specified time without system activity.

Off The PC does not switch to standby mode

Auto Suspend Timeout - Suspend mode

This field can only be changed, if the *PowerSaving* field is set to *Customize*.

1, 2, 5, ***10****, 20, 30 min*
The system switches to suspend mode after the specified time without system activity.

Off The PC does not switch to suspend mode

Hard Disk Timeout - Hard disk energy saving function

This field can only be changed, if the *PowerSaving* field is set to *Customize*.

1, ***2***, *5, 10, 20, 30 min*
: The hard disk drive motor is switched off after the specified time without system activity.

Off
: The PC does not switch off the hard disk drive motor.

Video timeout - Energy saving functions for the monitor

This field can only be changed, if the *PowerSaving* field is set to *Customize*.

2, *5, 10, 15, 20, 30 min*
: The screen goes dark after the specified time without system activity.

Off
: The screen does not go dark.

LID Switch - LID mode

This field specifies which mode the device is switched into when the notebook monitor is closed.

LCD Off
: The screen goes dark.

Standby Mode
: The system is switched into the standby mode (see *Standby Mode*)

Suspend Mode
: The system state is buffered in the DRAM memory. After folding open the monitor, the switch-on button must be pressed to return to the state prior to closing.

Battery Low Suspend - Suspend mode for low battery capacity

This field indicates whether a switch is to be made to suspend mode when the battery capacity is low.

Enabled
: The function is enabled; the device is switched to suspend mode when the battery capacity is low.

Disabled
: The function is disabled.

Suspend Mode

This field specifies where the system state is saved when the device is switched to suspend mode.

Save to DRAM
The system state is buffered in the DRAM memory.

Save to Disk The system state is saved to the hard disk, the system is switched off.

Resume On Modem Ring - Switching on for modem ring

This field specifies whether the notebook is booted when a call is made to the connected modem.
This field can be operated only if Suspend Mode is set to *Save to DRAM*.

OFF The function is disabled.

ON The function is enabled.

Resume On Time - Switching on at a fixed time

This field specifies whether the notebook is booted at a specific time. The time is set in the *Resume Time* field.
This field can be operated only if Suspend Mode is set to *Save to DRAM*.

OFF The function is disabled.

ON The function is enabled.

Resume Time - Setting the switch-on time

This field specifies whether the notebook is booted at a specific time.
This field can only be set if the *Suspend Mode* is set to *Save to DRAM* and the *Resume On Time* field is set to *ON*.

Cooling Control - Cooling mode

This field defines the cooling mode.

Performance When a certain temperature limit is exceeded in the system, the integrated fan is switched on first. If the temperature nevertheless continues to increase, the clock frequency of the processor is also reduced.

Silence First the clock frequency of the process is reduced, then the integrated fan is switched on.

Docking menu - Configuring the MobiDock

The Docking menu is only available if the notebook is connected to a MobiDock.

You can set up the following security features in the *Docking* menu

- external floppy disk drive (in the *Diskette B:* field)
- external hard disk drive (in the fields marked *IDE Adapter 1)*
- loading the system from hard disk C: (in the *Boot Hard Disk* field)
- MobiDock password (in the *Docking Station Password is* field)

```
      Phoenix BIOS Setup
  Main    Advanced    Security    Power    Docking    Boot    Exit

 Diskette B:                      [Not installed]      Item Specific Help

▶ IDE Adapter 1 Master            [None]
▶ IDE Adapter 1 Slave             [None]

  Boot Hard Disk:                 [Notebook]

  Integrated IDE adapter          [Secondary]
  SCSI Controller:                [Enabled]

  Docking Station Password is     [Disabled]
  Set Docking Station Password    [Press Enter]

F1  Help  ↑↓  Select Item  Space  Change Values      F9 Setup Defaults
ESC Exit  ←→  Select Menu  Enter  Select ▶ Sub-Menu  F10 Previous Values
```

Example of the *Docking* menu

Floppy disk B: - Set external floppy disk drive

This field shows the type of the floppy disk drive in the MobiDock.

Not Installed A floppy disk drive is not installed.

360KB - 5 1/4", 720KB - 3 1/2", 1.2MB - 51/4", 1.4MB - 3 1/2", 2.8MB - 3 1/2"
The entry depends on the floppy disk drive in the MobiDock.

IDE Adapter 1 Master/IDE Adapter 1 Slave - Setting external hard disk drives

i This setting is only possible when the *Onboard IDE-Adapter* field in the *Advanced/Integrated Peripheral* menu is set to *Auto* or *Primary*.

This field shows the type of the hard disk drive in the MobiDock. How to change the settings for the hard disk drives is described in the *IDE Adapter 0* field of the *Main-Setup*.

Boot Hard Disk - Specifying hard disk for system load

i This setting is only possible when the *Onboard IDE-Adapter* field in the *Advanced/Integrated Peripheral* menu is set to *Auto* or *Primary*.

This field is used to specify which hard disk is to be treated as hard disk C:. This is the hard disk from which the operating system is loaded.

Notebook The operating system is loaded from the notebook's hard disk.

MobiDock The operating system is started from the 1st MobiDock hard disk.

Integrated IDE Adapter - Setting the IDE Controller in the MobiDock

i This setting is only possible when the *Onboard IDE-Adapter* field in the *Advanced/Integrated Peripheral* menu is set to *Auto* or *Primary*.

This field is used to enable or disable the IDE controller in the MobiDock.

Secondary The IDE drives in the MobiDock are operated on the secondary IDE channel (IRQ15).

Disabled The IDE controller in the MobiDock is disabled.

SCSI Controller - Setting the MobiDock SCSI controller

This field is used to enable or disable the SCSI controller in the MobiDock.

Enabled The SCSI controller in the MobiDock is enabled.

Disabled The SCSI controller in the MobiDock is disabled.

Docking Station Password is - Password display

This field is only available if the notebook is connected to a MobiDock. This field indicates whether MobiDock access is controlled by means of a password.

Enabled You have to enter the docking station password in order to access the MobiDock.

Disabled You can access the MobiDock without having to enter a password

i You should set a docking station password to prevent unauthorized access to the MobiDock.

Set Docking Station Password -Setting the Docking Station Password

This field enables you to install the docking station password.

Boot menu - Defining boot sequence

In the *Boot* menu you define the sequence in which the system BIOS searches the drives for system files to start the operating system

```
     Phoenix BIOS Setup
  Main    Advanced    Security    Power    Docking    Boot    Exit

  1. Diskette Drive                          Item Specific Help
  2. Hard Drive                              ------------------
  3. CD-ROM Drive

F1  Help  ↑↓  Select Item  Space  Change Values
ESC Exit  ←→ Select Menu
```

Example for *Boot* menu

Default entry:

1. Diskette Drive
2. Hard Drive
3. CD-ROM Drive

To change this boot sequence, proceed as follows:

▶▶ Place the cursor on the entry for the drive you to which wish to move forward or back.

▶▶ Press the [F5] function key to move the selected drive up.
Use the [F6] key or the Space key to move forward the selected drive

Exit menu - Exiting BIOS Setup

In the *Exit* menu, you can save your settings and exit *BIOS Setup*.

```
     Phoenix BIOS Setup
  Main    Advanced    Security    Power    Docking    Boot    Exit

  Save Changes & Exit                          Item Specific Help
  Exit Without Saving Changes                  ------------------
  Get Default Values
  Load Previous Values
  Save Changes

F1  Help  ↑↓  Select Item  Space  Change Values      F9  Setup Defaults
ESC Exit  ←→  Select Menu  Enter  Select ▶ Sub-Menu  F10 Previous Values
```

Example for menu *Exit*

Save Changes & Exit - Saving and Exiting

This field saves the settings you have made and exits *BIOS Setup*.

Exit Without Saving Changes

This field exits *BIOS Setup* without saving the new settings.

i If you have made changes to passwords, these changes are still saved.

Get Default Values

This field reverts all settings to the default values

Load Previous Values

This field resets all values to those that were active when the *BIOS-Setup* was started.

Save Changes

This field saves the settings you have made.

Property and data protection

The software functions on your notebook enable you to protect your system and personal data in a number of ways against unauthorized access. By combining these options, you can achieve optimum protection for your system.

Security functions under Windows 9x

Under Windows 9x you can activate a screen saver and protect it with a password. Only those users who know the password can deactivate the screen saver and access any open files.

BIOS Setup security functions

The *Security* menu in *BIOS Setup* offers you various options for protecting your system and personal data against unauthorized access. By combining these options, you can achieve optimum protection for your system.

Preventing unauthorized BIOS Setup calls

You can activate this protection by setting a supervisor password in the *Security* menu (*Set Supervisor Password*).

Preventing unauthorized system access

You can activate this protection by setting a user password in the *Security* menu (*Set User Password*). In addition, you must select the entry *Enabled* in the *Password on boot* field.

Preventing unauthorized access to the hard disk drives

You activate this protection when you set hard disk passwords in the *Hard Disk Security* submenu of the *Security* menu (*Set HD1/HD2 password*).

If set, the hard disk passwords are checked at each system startup, regardless of whether *Password On Boot* is set to *Enabled* or *Disabled*.

Preventing unauthorized access to floppy disk drive

To activate this protection, select the value *Supervisor* for the *Diskette access* field in the *Security* menu.

Preventing unauthorized access to MobiDock

You can only activate this protection if the notebook is connected to a MobiDock.

You can activate this protection by setting a docking station password in the *Docking* menu (*Set Docking Station Password*).

Preventing unauthorized update of flash BIOS

To activate this protection, select the value *Disabled* for the *Flash Update* field in the *Security* menu.

Setting passwords

The Supervisor password prevents unauthorized callup of *BIOS Setup*. *BIOS Setup can be called only by those who know the* Supervisor password.

The user password prevents unauthorized access to your notebook. With the user password you can prevent booting of the operating system. The system can be accessed only by those who know the user password. A user password can only be set if a supervisor password is also set.

i

Passwords can be at most seven characters long. All alphanumerical characters can be used; no differentiation is made between upper-case and lower-case.

Passwords are not displayed as they are entered.

If you have forgotten a password contact your system administrator or contact our customer service.

To set or change a password, proceed as follows:

▶▶ Call *BIOS Setup* and select the *Security* menu (see "Settings in BIOS Setup"). You must additionally change into the *Hard Disk Security* submenu for the hard disk passwords.

▶▶ Mark the *Set Supervisor Password* or *Set User Password* or *Set HD password* field and press the Enter key.

The following applies for setting a hard disk password: if a hard disk password is already set, you are prompted to input it. Enter the former hard disk password and press the Enter key.

You are asked to enter a password:
`Enter new Password:`

▶▶ Enter the password and press the Enter key.

You are asked to confirm the password:
`Re-enter new Password:`

▶▶ Enter the password again and press the Enter key.

The new password is saved.
`Notice: Changes have been saved  [continue]`

▶▶ To prevent booting of the operating system, mark the *Password on boot* field and select the value *Enabled*.

If you do not want to make any other settings, you can exit *BIOS Setup*.

▶▶ Select the option *Save Changes & Exit* in the *Exit* menu.

The notebook is rebooted and the new password is effective.

Canceling password

i

If you cancel the supervisor password, you automatically deactivate the user password.

To cancel a password (without setting a new password):

▶▶ Call *BIOS Setup* and select the *Security* menu (see "Settings in BIOS Setup"). You must additionally change into the *Hard Disk Security* submenu for the hard disk passwords.

▶▶ Mark the *Set Supervisor Password* or *Set User Password* or *Set HD password* field and press the Enter key.

If a password has already been assigned, you will be asked to enter the old password (*Enter Current Password*). Enter the old password and press the Enter key.

You are asked to enter a password:

```
Enter new Password:
```

▶▶ Press the Enter key twice.

▶▶ Select the option *Save Changes & Exit* in the *Exit* menu.

The notebook is rebooted and the password is canceled.

Troubleshooting and tips

Take note of the safety hints in the chapter "Important notes", when you connect or disconnect cables.

If a fault occurs, try to correct it as described. If you fail to correct the problem, proceed as follows:

- ▶▶ Switch off the notebook.
- ▶▶ Make a note of the steps and the circumstances that led to the fault. Also make a note of any error messages displayed.
- ▶▶ Contact your sales office or customer service.

Installing new software

When installing programs or drivers, important files may be overwritten and modified. To be able to access the original data in the case of any problems following installation, you should make a backup of the your hard disk prior to installation.

The notebook does not start after switchon

If the notebook does not start after switchon, this may be due to the following causes:

The battery is not installed correctly

- ▶▶ Switch off the notebook.
- ▶▶ Check whether the battery is installed correctly in its compartment.
- ▶▶ Switch on the notebook.

The battery is dead

- ▶▶ Recharge the battery or install a fully charged battery.

The power adapter is not connected correctly

- ▶▶ Switch off the notebook.
- ▶▶ Check whether the power adapter is connected correctly to the notebook.
- ▶▶ Check whether the power cable is plugged properly into the power adapter and into the power outlet.
- ▶▶ Switch on the notebook. The indicator on the power adapter should light up.

The display of the notebook remains blank

If your screen remains blank this may have the following causes:

Monitor is switched off

- ▶▶ Press a key or enter the user password

If the notebook is connected to a MobiDock in which a PCI VGA adapter is installed, the notebook's display is always switched off.

The notebook's display is difficult to read

If the display is difficult to read, it can have the following reasons:

Reflexes

▶▶ Turn the notebook or alter tilt of the display.

Defective pixels on the screen

Pixel faults in the form of permanently lit, unlit or different-colored pixels can occur with LCD monitors. Up to ten pixel faults on the screen does not constitute grounds for exchanging the unit. Exceptional cases are:

- if two pixel faults are lying directly beside each other
- if three pixel faults occur in a 5-mm diameter circle

The external monitor stays blank

If your screen remains blank this may have the following causes:

Monitor is switched off

▶▶ Switch the external monitor on.

Screen has been blanked

▶▶ Press any key to continue.

Brightness control is set to dark

▶▶ Set the brightness control to light. For detailed information, please refer to the Operating Manual supplied with your monitor.

The notebook has been configured to drive the internal display

▶▶ Press the key combination Fn + F12 or change the *Display Device Selection* in *Main Setup* to *CRT* or *LCD&CRT*.

The external display's power cable or data cable is not connected properly

▶▶ Switch off the external monitor and the notebook.

▶▶ Check whether the power cable is plugged properly into the power adapter and into the power outlet.

▶▶ Check whether the data cable is properly connected to the notebook and the external monitor (if it is plugged in with a connector).

▶▶ Switch on the external monitor and the notebook.

The external display is blank or the image is unstable

The wrong frequency has been selected for the external monitor or for the application program.

▶▶ Terminate the application program in Windows 9x with Alt + F4. If the error persists after the program has been terminated, switch the external monitor off, wait at least three seconds, and then switch the external monitor on again.

▶▶ Set the screen resolution required by the application. Select the *Start* button Select the *System control* item under *Settings*. Double-click on the *Display* symbol. Select the required screen resolution in the *Settings* register card of the *Resolution* field.

The notebook stops working

If the notebook stops working, this may have the following reasons:

The notebook is in Standby or Suspend mode

▶▶ Reactivate the notebook by pressing a key (Standby mode) or by switching it on (Suspend mode).

An application program has caused the malfunction

▶▶ Close the application program or restart the notebook by switching it on/off or with a warm boot.

The battery is dead

▶▶ Recharge the battery or install a fully charged battery.

The touchpad does not work

If the touchpad does not work, it can have the following reasons:

Incorrect setting in Setup

▶▶ Check whether the field *PS/2 Mouse* in the *Main Setup* is set to *Enabled* or to Auto *Detect*.

External PS/2 mouse connected

The touchpad remains deactivated if an external PS/2 mouse is connected to the notebook.

The mouse does not work

If the connected mouse does not work, it can have the following reasons:

Incorrect setting in Setup

▶▶ Check whether the *PS/2 Mouse* field is set to *Enabled* (for a PS/2 mouse) or *Disabled* (for a serial mouse) in the *Main Setup*.

▶▶ Check the *COM Port* field in the submenu *Integrated Peripherals* of the *Advanced Setup* to ensure that serial port is enabled and set correctly.

Mouse driver not loaded

▶▶ Check whether the required mouse driver is properly installed and is present when the application program is started. Detailed information can be found in the User Guides of the mouse or application program.

Mouse not connected

- ▶▶ Switch off the notebook.
- ▶▶ Check whether the mouse cable is connected correctly to the notebook.
  If you use an adapter or extension lead with the mouse cable, check the connector.
- ▶▶ Switch on the notebook.

The floppy disk cannot be written

- ▶▶ Check whether that floppy disk is OK and is not write-protected.

The notebook's date or time is incorrect

- ▶▶ Set the time and/or date in the *Main Setup*.

i If the date and time are repeatedly incorrect when you switch on the notebook, the backup battery that supplies the internal clock is dead.
Connect the notebook via its power adapter to a wall outlet. The backup battery will charge fully in roughly two days.

The printer does not print

- ▶▶ Makes sure that the printer is switched on and on-line (see the manuals supplied with the printer).
- ▶▶ Check that the printer cable connecting the notebook and the printer is connected properly.
- ▶▶ Check that the correct printer driver is installed.
- ▶▶ Check the submenu *Integrated Peripherals* of the *Advanced Setup* to ensure that the port you are using is set correctly. The *COM Port* or *Parallel Port* or *Parallel Port Mode* setting, should match the settings in your application program under Windows x.

The PC card (PCMCIA card) cannot be accessed

If you are working under Windows for Workgroups:

- ▶▶ Set the value to *No* for the fields *Plug & Play O/S* and *Reset Configurtion Data* in *BIOS Setup* in *Advanced Setup*.

Acoustic warnings

A beep sounds every few seconds

The battery is almost drained.

▶▶ Charge the battery.

One long tone, pause, three long tones, pause, three long tones, pause, one long tone

No main memory is installed in the notebook.

▶▶ Install at least 16 MB of main memory.

A single continuous beep

The notebook cannot switch to standby or suspend mode because hard disk or diskette accesses take place or there is no space provided on the hard disk.

▶▶ Wait until the hard disk or diskette accesses have terminated, or set up the required storage space on the hard disk.

Three long beeps

The notebook cannot restore the programs that were active when it switched to Suspend mode.

Error messages on the screen

This section describes the error messages generated by the system BIOS. Error messages displayed by the operating system or programs are described in the relevant manuals.

Diskette read failure - press F1 to retry boot

The inserted system disk is defective

▶▶ Insert another system disk.

▶▶ Press function key [F1].

No boot device available - press F1 to retry boot

The operating system cannot be loaded

▶▶ Insert a system disk.

▶▶ Press function key [F1].

No boot sector on fixed disk - press F1 to retry boot

The operating system is not installed on the hard disk or the hard disk has not been formatted.

▶▶ Insert a system disk.

▶▶ Press function key [F1].

No devices detected

The PC card (PCMCIA) interface cannot be initialized.

▶▶ Set the *Plug & Play O/S* field to *No* in the *Advanced-Setup* of the *BIOS-Setup*.

Not a boot disk - press F1 to retry boot

The disk in the floppy drive is not a system disk.

▶▶ Remove the floppy disk from the drive.

▶▶ Press function key F1.

If you wish to boot from floppy disk:

▶▶ Insert a system disk.

▶▶ Press function key F1.

Real time clock failure
Invalid configuration information - please run setup program
Press the F1 key to continue, F2 to run the setup utility

The system configuration information is incorrect.

▶▶ Press function key F2.

▶▶ Reconfigure the system.

If the error message is displayed again, the notebook's backup battery is empty.
Connect the notebook via its power adapter to a grounded wall outlet or install a fresh battery. The backup battery will charge fully in roughly two days.

Restoring the hard disk contents under Windows 9x

▶▶ Insert the Windows 9x startup disk into the floppy disk drive and switch the notebook on.

▶▶ Follow the instructions on the screen.

i Detailed PC knowledge is required for manual partitioning.

▶▶ Insert the Windows 9x OEM CD into the CD-ROM drive.

▶▶ Start the *Setup* program on the CD.

▶▶ Insert the Drivers and Utilities CD into the CD-ROM drive.

▶▶ Install the drivers.

System expansions

Only qualified technicians may repair the device. Unauthorized opening or incorrect repair may greatly endanger the user (electric shock, fire risk).

Install only system expansions that satisfy the requirements and rules governing safety, RFI and electromagnetic compatibility and relating to telecommunications terminal equipment (see the chapter "Important notes").

Memory expansion

Use only memory expansion which has been released for your notebook. (32, 64 Mbyte modules, SD RAM, JEDEC 144 pin SO DIMM)

Never use force when installing or removing memory modules.

Make sure that foreign objects do not fall into the memory module compartment.

The main memory of your notebook can be expanded to 32 - 192 Mbyte using up to three 32 or 64 Mbyte memory modules. The notebook will not start without memory modules, as no fixed main memory is installed.

Installing/removing memory expansion

▶▶ Switch off the notebook.

▶▶ Remove the battery.

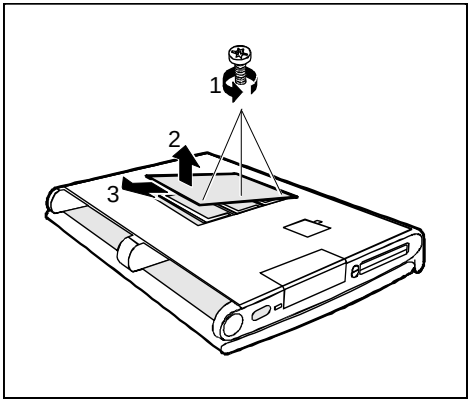

▶▶ Pull the power plug of the power adapter out of the power outlet.

▶▶ Close the display of the notebook so that it locks into place.

▶▶ Disconnect all cables connected to notebook.

▶▶ Place the notebook bottom-up on a flat surface.

▶▶ Remove the screws (1).

▶▶ Lift the cover (2) and pull it in the direction of the arrow (3) from the notebook.

In order to install memory modules:

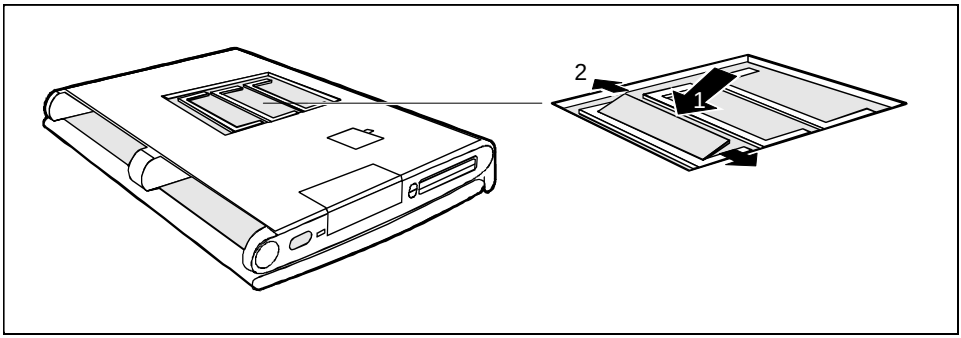

▶▶ Insert the memory modules, contacts first, into the slot (1).

▶▶ Carefully flap the memory module down (2) until you feel it latch in place.

▶▶ Install the other memory modules in the same way.

In order to remove memory modules:

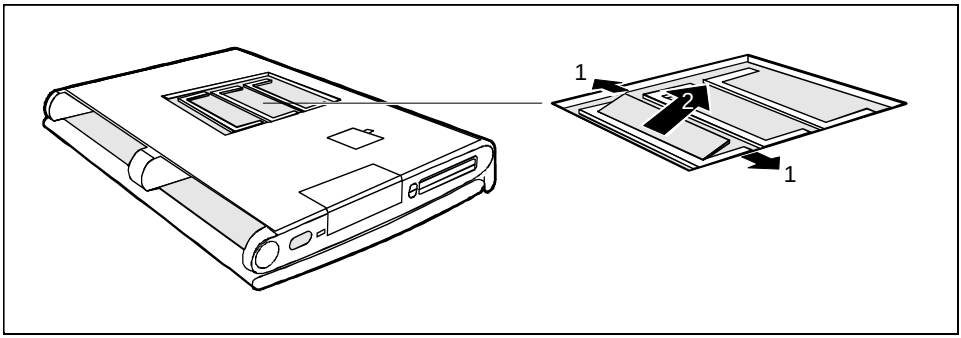

▶▶ Carefully push the two mounting clips outwards (1). The memory module flaps upwards.

▶▶ Slide the memory module out of its location (2).

▶▶ Remove the other memory modules in the same way.

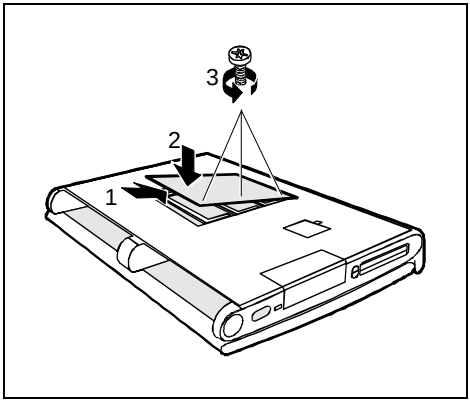

- ▶▶ Place the cover on its mounting location (1) and flap it into place on the underside of the notebook (2).
- ▶▶ Fasten the cover with the screw (3).
- ▶▶ Place the notebook bottom-down on a flat surface.
- ▶▶ Reconnect the cables that you disconnected before.
- ▶▶ Swing open the display.
- ▶▶ Refit the battery.

Connecting external devices

Disconnect all the devices from their respective power sources when you connect or disconnect a device. Read the documentation on the external device before connecting it.

Do not connect or disconnect cables during a thunderstorm.

Always take hold of the actual plug body. Never unplug a cable by pulling the cable itself!

Connect and disconnect the cables in the order described below.

Connecting cables

- Turn off all power and equipment switches.
- Pull all power plugs out of the grounded power outlets.
- Connect all the cables to the notebook and the external devices. Please observe under all circumstances the information provided in the chapter "Important notes".
- Plug all data communication cables into the utility sockets.
- Plug all power cables into the grounded power outlets.

Disconnecting cables

- Turn off all power and equipment switches.
- Pull all power plugs out of the grounded power outlets.
- Unplug all data communication cables from the utility sockets.
- Disconnect all the cables from the notebook and the external devices.

Port covers and connectors

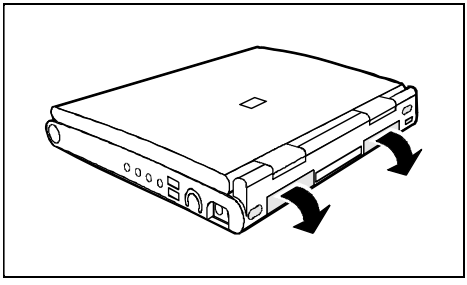

If you wish to connect an external display or a device with serial or parallel port, you must first open the port cover.

▶▶ Flap the port cover down.

▶▶ Connect the desired device.

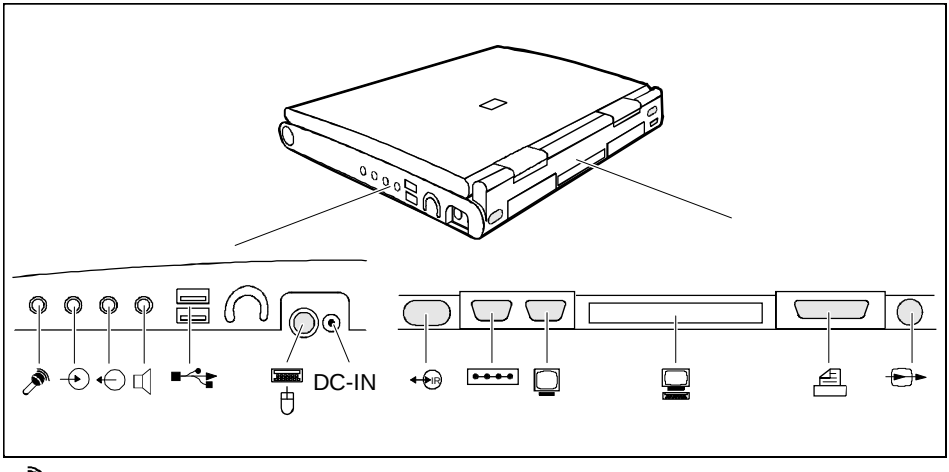

Microphone jack

Audio output (Line out)

USB - Universal Serial Bus

DC IN DC socket

Serial port

Connection for QuickPort or MobiDock

TV out

Audio input (Line in)

Audio output/Loudspeaker

PS/2 mouse port or keyboard port

IR Port

Video connector

Parallel interface

Connecting devices with serial or parallel port

▶▶ Connect the data cable of the external device to the appropriate port.

The serial port is configured by default as *COM1*. You can change the setting in the *COM Port* field in the *Integrated Peripherals* submenu in *Advanced Setup*. The parallel port is configured by default as *LPT1*. You can change the setting in the *Parallel Port* field in the *Integrated Peripherals* submenu in *Advanced Setup*.

Connecting an external monitor

You can connect a VGA screen. The notebook screen controller for an external monitor supports screen resolutions up to 1600 x 1200 with 65.536 colors (16 bits). If you wish to use a resolution greater than 640 x 480, you must load the relevant display drivers (see the manuals supplied with your display).

▶▶ Plug the data cable of the monitor into the monitor port.

▶▶ Connect the power cable of the external monitor to a power outlet and switch on the monitor.

▶▶ Switch on the notebook.

▶▶ Configure the display output in the *Display Device Selection* field in *Main Setup* or by pressing the key combination Fn + F12.

▶▶ Select the resolution for the external monitor.

Connecting the mouse

▶▶ Connect the mouse, depending on the type, to either the PS/2 mouse port or the serial port. The touchpad and the touchpad buttons are disabled when you connect a mouse.

▶▶ Switch on the notebook.

▶▶ Set the *PS/2 Mouse* field in *Main Setup* to *Disabled* if you want to use a serial mouse (e g. TrackMan).

▶▶ Install the necessary device driver (see the manual supplied with the mouse).

Connecting an external keyboard

Connecting an external keyboard does not disable the notebook's built-in keyboard.

►► Connect the external keyboard to the external keyboard port.
If you wish to connect a keyboard with a 5-pin connector you will require an adapter from 5-pin DIN to 6-pin DIN mini connector.

i

Never press the keys on the external and internal keyboards at the same time.
If the external keyboard does not have an [Fn] key, you can press the right [Ctrl] key and the [Alt Gr] key together instead.
For example, to enter the key combination [Fn] + [F1] on the external keyboard you would press [Ctrl] + [Alt Gr] + [F1].

Connecting external audio devices

If you attach an external microphone, the built-in microphone is disabled. If you attach an external loudspeaker, the built-in loudspeaker is disabled.

Connect the audio device (external microphone, external loudspeaker, audio output) to the appropriate port.

Connecting a MobiDock or QuickPort

The manuals supplied with the MobiDock and the QuickPort describe how to connect the notebook.

⚠

Read the MobiDock or QuickPort/QuickPortPlus manuals carefully before attempting to connect the notebook.
Make sure that no PC cards or extracting tools for PC cards are projecting from the notebook. No power adapter may be connected when you dock the MobiDock onto the notebook.

If the notebook is connected to a MobiDock in which a PCI VGA board is installed, the notebook's display is always switched off.

In case of problems with the display output on the external monitor, check the settings in the *Display Device Selection* field in *BIOS Setup* in the *Main* menu.

Makes sure that any board installed in the MobiDock or the QuickPort/QuickPortPlus do not use I/O addresses, interrupts or DMA channels already used by the notebook. Details of the I/O addresses, interrupts and DMA channels are provided in the section "Technical data".

The maximum DMA transfer rate between MobiDock and notebook is of 5 Mbyte/second.

If necessary, you free I/O addresses (i.e. graphic controller) or interrupts (i.e. serial or parallel interface). You do this by deactivating the relevant components in the *BIOS-Setup*.

When the MobiDock is switched off, you should remove the batteries from the notebook to prevent MobiDock from causing long-term capacity loss to the batteries.

If you wish to operate IDE drives in the MobiDock, you must set the value *Auto* in the *Local Bus IDE Adapter* field in *BIOS Setup* in the *Integrated Peripherals* submenu of the *Advanced* menu.

You cannot operate the floppy disk drive on the parallel port of the MobiDock.

i

You should set a docking station password to prevent unauthorized access to the MobiDock.

Transferring data with the infrared interface

The infrared interface (Fast IrDA) at the back of the notebook enables wireless serial data transfer.

By default, the infrared interface is set to *COM2* in the setup. You can change the setting in the *IrDA Port* field in the *Integrated Peripherals* submenu in *Advanced Setup*.

i

The infrared interface can only be used, when the infrared interface is enabled in the *IrDA Port* field in the *Integrated Peripherals* submenu in *Advanced Setup*.

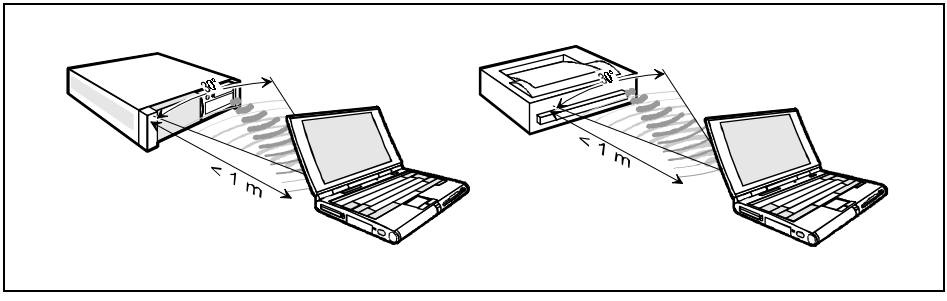

►► Set up the infrared transmitter and receiver as illustrated above.
The devices may be no more than one meter apart. The infrared interface of one device must be in the range of influence (horizontally approx. 30° and vertically approx. 15°) of the infrared interface of the other device.

Technical data

Technical data for the notebook

Processor Numeric processor	Pentium II as from 233 MHz integrated in processor
Cache:	32 Kbyte integrated in processor 512 Kbyte synchronous Second Level Cache
Main memory	32 - 196 Mbyte SD RAM 3 slots for 32, 64 Mbyte modules JEDEC 144 pin SO DIMM (may not be mixed)
System ROM (flash EPROM):	512 Kbyte for system and video BIOS
Disk drives:	Floppy disk drive for 3 1/2 inch floppy disks hard disk drive 2.5 inch,12.7 mm height, CD ROM drive twenty speed or more
Display:	Backlit liquid-crystal transmissive display (LCD)
Display diagonal: • LCD TFT/ADS	30.7 cm (12.1 inch) XGA Overhead Display 33.0 cm (13.0 inch) XGA ADS 33.8 cm (13.3 inch) XGA
Resolution / colors: LCD TFT 12.1 / LCD ADS 13 / LCD TFT 13.3	1024x768 / 262.144 colors (18 bit)
Screen controller	ATI-3D Rage LT Pro
• Video memory (SG-RAM):	4 Mbyte
• supported resolutions on external display	640x480 / 16.7 million colors and 85 Hz 800x600/ 16.7 million colors and 85 Hz 1024x768 / 65.536 colors and 75 Hz

Audio:	
• Compatibility:	Soundchip ESS1869 Soundblaster Pro, Ad lib, MS soundsystem
• A/D and D/A conversion:	16 bit, stereo
input devices	
• Keyboard:	86 keys
• Touchpad (Length, Width)	64 x 48 mm
Slots	
• PC card (CardBus/PCMCIA):	PCMCIA 2 x type II or 1 x type III, PC card controller TI 1250, Zoomed-Video-Port
Ports	
• PS/2 mouse/keyboard port:	6-pin mini DIN female connector
• Port for MobiDock/QuickPort:	female connector, 240-pin
• Parallel port:	25-pin female connector, bi-directional, EPP/ECP capable
• Port for external monitor:	female connector, 15-pin
• Serial port:	9-pin male connector, 16550 compatible
• Loudspeaker:	connector, stereo
• Microphone jack:	connector, mono
• Audio input:	connector, stereo
• Audio output:	connector, stereo
• Infrared interface (Fast IrDA)	
• USB (Universal Serial Bus)	
Power consumption:	50 W max. (notebook on with battery charging)
Permissible ambient temperature	
• during operation:	5 °C .... 35 °C
• Transport:	-20 °C .... 60 °C
Dimensions (Width x Depth x Height):	309 mm, 256 mm, 28/46 mm
Weight with a battery:	approx. 3 kg

Technical data for the battery

Rated voltage:	14.4 V
Rated capacity	40 Wh
Charging time (when not in operation):	3 hours (in the off state)
Operating time with a battery:	approx. 2 hours (depending on application)
Weight:	370 g

Technical data for the power adapter

Primary

- Rated voltage: 100 V to 240 V (automatic)
- Frequency: 50 Hz to 60 Hz (automatic)
- max. rated current: 0.75 A / 1.5 A

Secondary

- Rated voltage: 19 V
- max. rated current: 2.6 A

Technical data for the car adapter

Primary

- Rated voltage: 10 V to 15 V

Secondary

- Rated voltage: 19 V
- max. rated current: 2.6 A

CD-ROM drive

Supported CD formats:

- CD-Digital Audio
- CD-ROM (Mode 1 and Mode 2)
- CD-ROM XA (Mode 2, Form 1 and Form 2)
- CD-I (Mode 2, Form 1 and Form 2)
- CD-I Ready
- CD bridge
- Photo-CD (Single- and Multisession)
- Video-CD

Laser

- Class 1 Laser Product
- Type: Semiconductor GaA/As
- Wave length: 780 nm
- Power output: 5 mW max.

DVD drive

Supported DVD/CD formats:

- DVD- 5: 4.377 Gbyte
- DVD- 9: 7.959 Gbyte
- DVD-10: 8.754 Gbyte
- DVD-18: 15.917 Gbyte
- CD (Mode-1): 656.5 Mbyte
- CD (Mode-2): 748.8 Mbyte

Laser

- Class 1 Laser Product
- Type: Semiconductor GaA/As
- Wave length: 650 nm
- Power output: 5 mW max.

Interrupt I/O addresses, and DMA assignment

Changeable internal settings:

Function	I/O address	IRQ	DMA
Soundchip "ESS1869"	**220h - 22Fh *** 240h - 24Fh 260h - 26Fh 280h - 28Fh *Midi Play Unit (MPU):* **330h - 331h** 300h - 301h 310h - 311h 320h - 321h *FM:* **388h - 38Bh **** *Gameport:* **201h*** *Control Interface:* **800h-807h** 810h-817h 820h-827h 830-837h	**IRQ 5 * (LPT)** IRQ 7 (LPT) IRQ 9 IRQ 10 IRQ 11	*1. DMA:* **DMA 1 *** DMA 0 DMA 3 *2. DMA:* **DMA 3 *** DMA 0 DMA 1
Parallel port **LPT**	**378h - 37Fh* =** 378h - 37Fh = 3BCh- 3C5h = 278h - 27Fh =	**IRQ 7*** IRQ 5 IRQ 7 IRQ 5	DMA 1 or DMA 3 in ECP-mode
1. Serial port **COM**	**3F8h - 3FFh* =** 2F8h - 2FFh = 3E8h - 3EFh = 2E8h - 2EFh =	**IRQ 4 / COM1 *** IRQ 3 / COM2 IRQ 4 / COM3 IRQ 3 / COM4	
2. Serial port **COM** = Fast IrDA	**2F8h - 2FFh * =** 3E8h - 3EFh = 2E8h - 2EFh =	**IRQ 3 / COM2 *** IRQ 4 / COM3 IRQ 3 / COM4	**DMA 0** * DMA 1 DMA 3

* = default setting in BIOS-SETUP
** = default setting, when Audio is enabled

Fixed internal settings:

Function	I/O address	IRQ	DMA
System Timer	040h-043h	0	
Keyboard	060h, 064h	1	
Interrupt controller	020h-021h, -0A0h-0A1h	2	
Floppy disk drive controller	3F0h-3F5h, 3F7h	6	2
System CMOS / Realtime clock	070h-071h	8	
PC card controller "Cirrus CL-PD 6832"	automatically defined	Shared IRQ	
USB controller	automatically defined	Shared IRQ	
Synaptics touchpad		12	
Numeric processor	0F0h-0FFh	13	
Intel 82371AB PCI bus Master IDE controller	1F0h-1F7h, 3F6h	14	
DMA controller	000h-00Fh, 081h-08Fh, 0C0h-0DFh		4
PCI bus	CF8h-CFFh		

Settings for external components (e.g. MobiDock, PC card):

Function	I/O address	IRQ	DMA
2. IDE-Hard disk controller in the MobiDock (PCI)	170h - 177h, 376h	IRQ 15	
Internal **SCSI** controller "Adaptec AIC7850" in the MobiDock	Automatically recognized and defined!	Shared IRQ	
Max. two PCI slots in the MobiDock (PCI to PCI Bridge)		Shared IRQ	
Max. two ISA slots in the MobiDock (PCI to ISA Bridge)	a) PnP-ISA: is automatically recognized and defined (no shared IRQ)! b) ISA (without PnP): depends on the card setting!		
PC card (PCMCIA cards): max. 1x TypIII or 2x TypII • I/O cards (modem, network board, COM, SCSI etc.) • memory cards (e.g. SRAM, FLASH) • ATA cards (e.g. Harddisk, Sundisk)	PC cards require an IRQ (**no** shared IRQ!), I/O addresses and/or a memory area and possibly DMA. (see also the documentation on the PC card).		

BIOS SETUP

PnP = Plug and Play

Shared IRQ:

Several PCI components can **share one** free ISA-**IRQ** (assignment of the IRQs is automatic).
Conflict situations with ISA cards can be prevented under DOS/WfW with the "ISA configuration utility" disk, which you created using the batchfiles in the directory */PROGS/DISKS* (IRQ, DMA, I/O address, etc. are reserved for the ISA card and are therefore no longer available for the PCI bus!).
Under Windows 9x you can change the resource contentions manually with the "Device Manager".

Port assignment

The assignment of the external ports are as follows:

DC jack (DC IN)

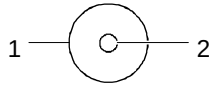

Pos.	Meaning
1	0 V
2	+19 V

Port for external keyboard or PS/2 mouse

Pos.	Meaning
1	Data
2	free
3	0 V
4	+5 V
5	Clock
6	free

TV out socket

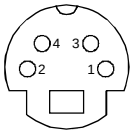

Pos.	Meaning
1	0 V
2	0 V
3	SVideo_Y_FBAS_MUX
4	SVideo_COL

Serial port

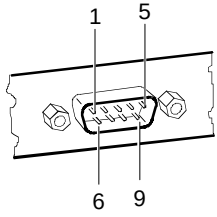

Pos.	Signal name	Meaning
1	DCD (Data Carrier Detect)	Data Carrier Detect
2	RxD (Receive Data)	Receive Data
3	TxD (Transmit Data)	Transmit Data
4	DTR (Data Terminal Ready)	Data Terminal Ready
5	Signal Ground	Signal Ground
6	DSR (Data Set Ready)	Data Set Ready
7	RTS (Request to Send)	Request to Send
8	CTS (Clear to Send)	Clear to Send
9	Ri (Ring Indicator)	Ring Indicator

USB port

Pin	Signal name	Meaning
1	VCC	VCC of the Notebook
2	DATA_NEGATIVE	Data
3	DATA_POSITIVE	Data
4	GND	Ground

Port for external monitor

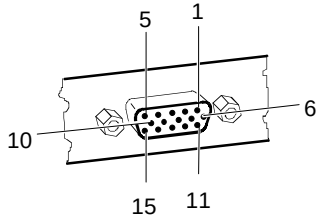

Pos.	Meaning
1	Video output red
2	Video output green
3	Video output blue
4	reserved
5	DDC ground
6	Video ground red
7	Video ground green
8	Video ground blue

Pos.	Meaning
9	+5V
10	logic ground
11	reserved
12	DDC data line (bi-directional)
13	horizontal synchronization
14	vertical synchronization
15	DDC clock signal line

Parallel interface

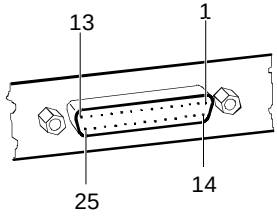

The parallel interface supports three transfer modes: SPP, EPP and ECP. SPP mode (standard parallel port) is the mode traditionally used to drive a printer. EPP (Enhanced Parallel Port) and ECP (Extended Capabilities Port) modes are transfer modes that allow transfer rates of 2 and 2.4 Mbytes/s. These modes will only work in connection with peripheral devices which specifically support them. Cases where these transfer modes are used are, for example, interface conversions between Parallel and SCSI or Parallel and IDE. The pinouts are different in all three modes.

Pinout in SPP mode (Standard Parallel Port)

Pos.	Signal name	Meaning
1	STROBE	Data message
2-9	Data Lines 0-7	Data lines 0-7
10	ACKNOWLEDGE	Data acknowledgement
11	BUSY	Not ready to receive
12	PE	End of paper
13	SELECT	Device selection
14	AUTO	Automatic new line
15	ERROR	Device error
16	INIT	Reset/initialize
17	SELECT IN	Printer selection
18-25	GROUND	Ground

Pinout in EPP mode (Enhanced Parallel Port)

Pos.	Signal name	Meaning
1	Write	Output
2-9	Data Lines	Input/output
10	Intr	Input
11	Wait	Input
12	reserved	-
13	reserved	-
14	DStrb	Output
15	reserved	-
16	reserved	-
17	AStrb	Output
18-25	Ground	-

Pinout in ECP mode (Enhanced Capabilities Port)

Pos.	Signal name	Meaning
1	HostClk	Output
2-9	Data Lines 0-7	Input/output
10	PeriphClk	Input
11	PeriphAck	Input
12	AckReverse	Input
13	Xflag	Input
14	HostAck	Output
15	PeriphRequest	Input
16	ReverseRequest	Output
17	ECP-Mode	Output
18-25	Ground	-

Pinouts for connecting an external floppy disk drive

Pos.	Signal name	Meaning
1	+5V	Output (Supply voltage)
2	INDEX#	Input
3	TRK0#	Input
4	WP#	Input
5	RDATA#	Input
6	DSKCHG#	Input
7	MSEN0	Input
8	DRATE0	Output
9	MSEN1	Input
10	DR1#	Output
11	MTR1#	Output
12	WDATA#	Output
13	WGATE#	Output
14	DENSEL	Output
15	HEAD	Output
16	DIR#	Output
17	STEP#	Output
18-22	Ground	-
23	+5V	Output (Supply voltage)
24	PNF	Input
25	Ground	-

= Signal is "low" active

Contents

Introduction **1**
Notational conventions 2
Installing an ergonomic video workstation 2

Important notes **3**
Safety 3
Notes on installing and removing boards and modules 3
Manufacturer's notes 4
Energy saving 4
Disposal and recycling 4
CE certificate 4
FCC Class B Compliance Statement 5
Power cord selection 6
On the move with the notebook 7
Cleaning the notebook 8

Preparation for use and operation **9**
Unpacking and checking the delivery 9
Choosing where to set up your notebook 9
Preparing the notebook for use 10
Switching on the notebook 12
Switching off the notebook 13
Indicators and input devices 13
Display field 14
Touchpad and Touchpad Keys 15
Keyboard 15
Key combination 18
The battery 20
Charging, caring for and maintaining the battery 20
Connecting the AC adapter 21
Using AC adapter as external power adapter 22
Connecting the power adapter 24
Connecting the car adapter 25
Removing and installing drives and batteries 26
Floppy disk drive 27
Connecting the floppy disk drive externally 27
Working with floppy disks 28
Operating the CD-ROM drive and the DVD drive 29
Operating the Zip drive 31
PC Cards 34
Zoomed video port 34
Installing a PC card 35
Removing PC cards 35
Microphone and loudspeaker 36
Using the power-management features 37
Maximum Battery Life-Mode 37
Standby mode 37
Suspend mode 38
Display 39
Hard disk's power-management feature 39
Loudspeaker 39
Volume adjustment 40

Changing display settings 40
Switching between internal and external display 40

Settings in BIOS Setup 41
Starting BIOS Setup 41
Operating BIOS Setup 42
Main menu - Making system settings 43
System Time/System Date 43
Diskette A: - floppy disk drive 43
IDE Adapter 0 Master/IDE Adapter 1 Master - hard disk drive 44
Display Device Selection 46
TV Mode 46
Boot Options - System startup options 47
System Memory - Main memory 47
Extended Memory 47
Advanced menu - Advanced system settings 48
Integrated Peripherals - Ports and controllers 49
PCI Devices - PCI configuration 54
Plug & Play O/S 55
Enable ACPI - ACPI functionality 55
Reset Configuration Data 56
Large Disk Access Mode - Hard disk access 56
Security menu - Setting up the security features 57
Supervisor Password is/User Password is - Password display 57
Set Supervisor Password 57
Set User Password 57
Hard Disk Security - Setting hard disk passwords 58
Password on boot - Password query during system startup 58
Diskette access - Access privilege for disk drive 58
Flash update - Permission for BIOS update 58
Power menu - Setting energy saving functions 59
PM Control - Effectiveness of the energy saving functions 59
Power Savings - Extent of energy saving functions 60
Standby Timeout 60
Auto Suspend Timeout - Suspend mode 60
Hard Disk Timeout - Hard disk energy saving function 61
Video timeout - Energy saving functions for the monitor 61
LID Switch - LID mode 61
Battery Low Suspend - Suspend mode for low battery capacity 61
Suspend Mode 62
Resume On Modem Ring - Switching on for modem ring 62
Resume On Time - Switching on at a fixed time 62
Resume Time - Setting the switch-on time 62
Cooling Control - Cooling mode 62
Docking menu - Configuring the MobiDock 63
Floppy disk B: - Set external floppy disk drive 63
IDE Adapter 1 Master/IDE Adapter 1 Slave - Setting external hard disk drives 63
Boot Hard Disk - Specifying hard disk for system load 64
Integrated IDE Adapter - Setting the IDE Controller in the MobiDock 64
SCSI Controller - Setting the MobiDock SCSI controller 64
Docking Station Password is - Password display 64
Set Docking Station Password -Setting the Docking Station Password 64
Boot menu - Defining boot sequence 65
Exit menu - Exiting BIOS Setup 66

Property and data protection **67**
Security functions under Windows 9x 67
BIOS Setup security functions 67
Setting passwords 68
Canceling password 69

Troubleshooting and tips **71**
Installing new software 71
The notebook does not start after switchon 71
The display of the notebook remains blank 71
The notebook's display is difficult to read 72
Defective pixels on the screen 72
The external monitor stays blank 72
The external display is blank or the image is unstable 73
The notebook stops working 73
The touchpad does not work 73
The mouse does not work 73
The floppy disk cannot be written 74
The notebook's date or time is incorrect 74
The printer does not print 74
The PC card (PCMCIA card) cannot be accessed 74
Acoustic warnings 75
Error messages on the screen 75
Restoring the hard disk contents under Windows 9x 76

System expansions **77**
Memory expansion 77
Installing/removing memory expansion 77

Connecting external devices **81**
Port covers and connectors 82
Connecting devices with serial or parallel port 83
Connecting an external monitor 83
Connecting the mouse 83
Connecting an external keyboard 84
Connecting external audio devices 84
Connecting a MobiDock or QuickPort 84
Transferring data with the infrared interface 85

Technical data **87**
Technical data for the notebook 87
Technical data for the battery 88
Technical data for the power adapter 89
Technical data for the car adapter 89
CD-ROM drive 89
DVD drive 89
Interrupt I/O addresses, and DMA assignment 90
Port assignment 93
DC jack (DC IN) 93
Port for external keyboard or PS/2 mouse 93
TV out socket 93
Serial port 94
USB port 94
Port for external monitor 95
Parallel interface 95

A26391-K84-Z100-1-7619

Mobile 750

Operating Manual

August 1998 edition

Copyright © Siemens Nixdorf Informationssysteme AG August 1998.

Alle Rechte vorbehalten, insbesondere (auch auszugsweise) die der Übersetzung, des Nachdrucks, der Wiedergabe durch Kopieren oder ähnliche Verfahren.

Zuwiderhandlungen verpflichten zu Schadenersatz.

Alle Rechte vorbehalten, insbesondere für den Fall der Patenterteilung oder GM-Eintragung.

Microsoft, MS, MS-DOS und Windows sind eingetragene Warenzeichen der Microsoft Corporation.

Die übrigen erwähnten Hard- und Softwarenamen sind Handelszeichen und/oder Warenzeichen der jeweiligen Hersteller.

Liefermöglichkeiten und technische Änderungen vorbehalten.