Introduction

This Operating Manual tells you how to put your PC into operation and how to operate it in daily use. This description applies for all configuration levels. Depending on the configuration level chosen some of the hardware components described may not be available on your PC. Please observe the notes on your operating system.

Your device is a powerful PC which is suitable for both professional and private use.

Your PC is available in various configuration levels, which differ in hardware and software equipment. In addition, you can incorporate operable drives (for example DAT drive, streamer) and a second hard disk, as well as other boards.

Depending on the configuration level chosen, your PC is supplied with Windows 9x or Windows NT as the operating system.

Your PC has a number of security features to ensure that no unauthorized persons can access your data. For example, you can activate a screen saver with password protection. The security functions in the *BIOS Setup* also allow you to protect your data by means of passwords. In addition, you can also lock your PC mechanically using the cover lock. Systems with a chipcard reader offer additional protection.

Further information on this PC is provided:

- in the manual "Safety, Guarantee and Ergonomics"
- in the Operating Manual for the monitor
- in the Technical Manual for the system board
- in the manual "BIOS Setup"
- in the documentation of your operating system
- in the information files (e. g. **.TXT*, **.DOC*, **.WRI*, **.HLP*)

i Some of the manuals listed can be found on the CD "Drivers & Utilities" provided with your computer. These manuals can be read and printed with the Acrobat Reader contained on the CD.

Notational conventions

The meanings of the symbols and fonts used in this manual are as follows:

! Pay particular attention to texts marked with this symbol. Failure to observe this warning endangers your life, destroys the system, or may lead to loss of data.

i This symbol is followed by supplementary information, remarks and tips.

► Texts which follow this symbol describe activities that must be performed in the order shown.

`Texts in this typeface` are screen outputs.

Texts in italics indicate commands or menu items.

"Quotation marks" indicate names of chapters and terms that are being emphasized.

Important notes

In this chapter you will find information regarding safety which it is essential to take note of when working with your PC. The manufacturer's notes contain helpful information on your PC.

Safety

Pay attention to the information provided in the manual "Safety, Guarantee and Ergonomics" and to the following notes.

- During installation and before operating the device, observe the instructions on environmental conditions in the chapter entitled "Technical data" as well as the instructions in the chapter "Preparation for use and operation".
- Please check whether the device is set to the local power supply (see chapter "Preparation for use and operation").
- The main switch and the ON/OFF switch do not disconnect the system unit from the line voltage. To disconnect the line voltage completely, remove the power plug from the grounded power outlet.
- Replace the lithium battery on the system board in accordance with the instructions in the chapter "System expansions - Replacing processor and lithium battery".
- Caution: components in the system can get very hot.
- Keep this Operating Manual together with your device. If you pass on the device to third parties, you should also pass on this manual.

Notes on installing and removing boards

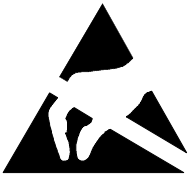

Boards with electrostatic sensitive devices (ESD) may be identified by the label shown.

When you handle boards fitted with ESDs, you must observe the following points under all circumstances:

- You must always discharge yourself (e.g. by touching a grounded object) before working.
- The equipment and tools you use must be free of static charges.
- Pull out the power plug before inserting or pulling out boards containing ESDs.
- Always hold boards with ESDs by their edges.
- Never touch pins or conductors on boards fitted with ESDs.

Manufacturer's notes

Energy saving

When the PC is delivered, some energy-saving functions are already set (see the Technical Manual for the system board or the manual "BIOS Setup").

- If you are not using your PC, switch it off.
- In the *BIOS Setup* you may set further energy-saving functions for the PC (see the Technical Manual of the system board or in the manual "BIOS Setup").

Energy saving under Windows NT

If the attached monitor and screen controller support power management in accordance with VESA (DPMS), the screen saver *Powersaver* ("Drivers & Utilities" CD) can be used to switch the monitor into power management mode.

Energy saving under Windows 95

The *Screen Saver* tab allows you to set further energy-saving functions for your screen. Select the following item in the *Start* menu: *Settings* - *Control Panel* - *Display* - *Display Properties* - *Screen Saver* - *Energy saving features of monitor*.

Energy saving under Windows 98

In the *Start* - *Settings* - *Control Panel* - *Power Management* menu you can set additional power-management functions.

Disposal and recycling

This device has been manufactured to the greatest possible degree from materials which can be recycled or disposed of in a manner that is not environmentally damaging. The device is taken back after use, so that it can be recycled, provided that it is returned in a condition which is the result of normal use. Any components not recuperated will be disposed of in an environmentally acceptable manner.

For devices marked with this symbol Siemens AG offers a guarantee for **36 months** with a **Bring-in-Service**. The guarantee starts on the day of delivery (sale date) by Siemens or a Siemens partner.

We herewith declare that it will be possible to repair any device marked with the eco-label for at least 5 years after production of that device has discontinued.

Information on power management and energy saving mode can be found in chapter "Technical data".

Do not throw lithium batteries or accumulators into the trashcan. They must be disposed of in accordance with local regulations concerning special waste.

If you have any questions on disposal, please contact your local office, our service department, or, directly:

Siemens AG
Recyclingcenter
D-33106 Paderborn

Tel.: 49 5251 818 010
Fax: 49 5251 818 015

CE certificate

The shipped version of this device complies with the requirements of the EEC directives 89/336/EEC "Electromagnetic compatibility" and 73/23/EEC "Low voltage directive".

FCC Class B Compliance Statement

If there is an FCC statement on the device, then:
The following statement applies to the products covered in this manual, unless otherwise specified herein. The statement for other products will appear in the accompanying documentation.

NOTE:

This equipment has been tested and found to comply with the limits for a "Class B" digital device, pursuant to Part 15 of the FCC rules and meets all requirements of the Canadian Interference-Causing Equipment Regulations. These limits are designed to provide reasonable protection against harmful interference in a residential installation. This equipment generates, uses and can radiate radio frequency energy and, if not installed and used in strict accordance with the instructions, may cause harmful interference to radio communications. However, there is no guarantee that interference will not occur in a particular installation. If this equipment does cause harmful interference to radio or television reception, which can be determined by turning the equipment off and on, the user is encouraged to try to correct the interference by one or more of the following measures:

- Reorient or relocate the receiving antenna.
- Increase the separation between equipment and the receiver.
- Connect the equipment into an outlet on a circuit different from that to which the receiver is connected.
- Consult the dealer or an experienced radio/TV technician for help.

Siemens AG is not responsible for any radio or television interference caused by unauthorized modifications of this equipment or the substitution or attachment of connecting cables and equipment other than those specified by Siemens AG. The correction of interferences caused by such unauthorized modification, substitution or attachment will be the responsibility of the user.

The use of shielded I/O cables is required when connecting this equipment to any and all optional peripheral or host devices. Failure to do so may violate FCC rules.

Power cord selection

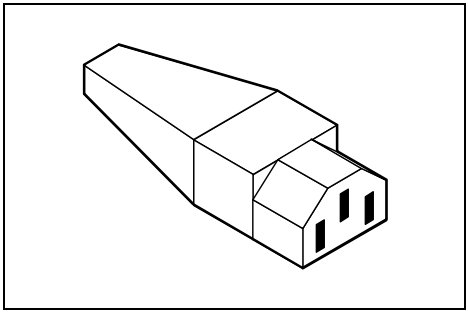

The power cord for this unit has been packed separately and has been selected according to the country of destination. It must be used to prevent electric shock. Use the following guidelines if it is necessary to replace the original cord set.

The female receptacle of the cord set must meet CEE-22 requirements (see Figure).

For the United States and Canada

Use a UL listed and CSA labeled cord set consisting of a three conductor cord with a maximum length of 15 feet.

For units which stand on a desk or table, type SVT or SJT cord sets shall be used.

For units which stand on floor, only SJT type cord sets shall be used.

The cord set must be selected according to the current rating for your unit. Please consult Table A for the selection criteria for power cords used in the United States and Canada.

Table A:

Cord Type	Size of Conductors in Cord	Maximum Current Rating of Unit
SJT	18 AWG 16 AWG 14 AWG	10 Amps 12 Amps 12 Amps
SVT	18 AWG 17 AWG	10 Amps 12 Amps

For units set at 115 V:

use a parallel blade, grounding type attachment plug rated 15 A, 125 V.

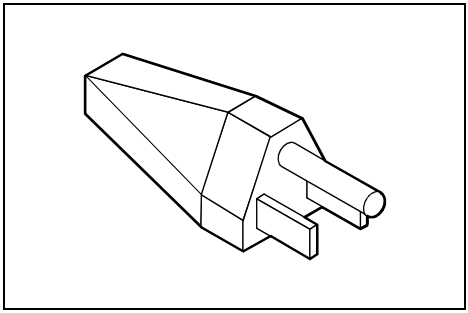

For units set at 230 V (domestic use):

use a tandem blade, grounding type attachment plug rated 15 A, 250 V.

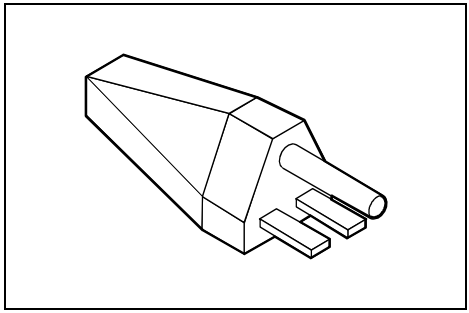

For units set at 230 V (outside of the United States and Canada):

use a cord set consisting of a minimum AWG according to Table A and a grounding type attachment plug rated 15 A, 250 V. The cord set should have the appropriate safety approvals for the country in which the equipment will be installed and should be marked HAR.

For the United Kingdom

Should the plug on the flexible cord not be of the type for your socket outlets, do not use an adapter but remove the plug from the cord and discard. Carefully prepare the end of the supply cord and fit a suitable plug.

WARNING

THIS APPLIANCE MUST BE EARTHED

IMPORTANT

The wires in this mains lead are colored in accordance with the following code:

Green and Yellow:	Earth
Blue:	Neutral
Brown:	Live

As the colors of the wires in the mains lead of this appliance may not correspond with the colored markings identifying the terminals in your plug, proceed as follows:

- The wire which is colored Green and Yellow must be connected to the terminal in the plug which is marked with the letter E or by the earth symbol or colored Green or Green and Yellow.
- The wire which is colored Blue must be connected to the terminal which is marked with the letter N or colored Black.
- The wire which is colored Brown must be connected to the terminal which is marked with the letter L or colored Red.

Transporting the PC

Transport all parts separately, and in their original packaging or in a packaging which protects them from knocks and jolts, to the new site. Do not unpack them until all transport maneuvers are completed.

Never drop the monitor (risk of implosion)!

Cleaning the PC

Turn off all power and equipment switches and pull the power plug out of the grounded power outlets.

Do not clean any interior parts yourself, leave this job to a service technician.

Do not use any cleaning agents that contain abrasives or may corrode plastic.

Ensure that no liquid enters the system.

Ensure that the ventilation areas of the system unit and the monitor are free.

Cleaning the system unit and the monitor

Wipe the system unit and monitor casing with a dry cloth. If particularly dirty, use a cloth which has been moistened in mild domestic detergent and then carefully wrung out.

Cleaning the keyboard and the mouse

Use a cloth for disinfection to clean the keyboard and the mouse.

Remove the retaining ring on the underside of the mouse and then clean the mouse mechanism and the rotating ball.

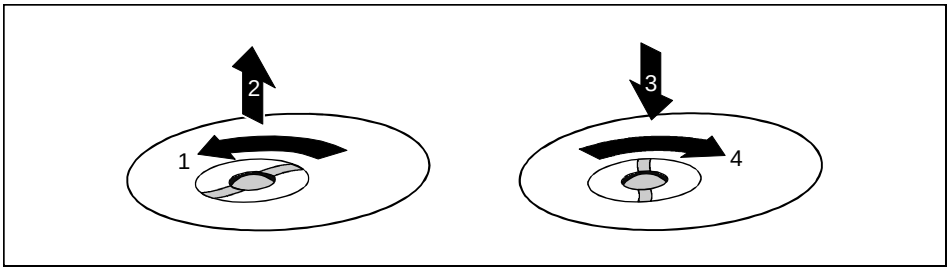

- ► Using both thumbs exert downward pressure on the notches of the retaining ring and turn the ring anticlockwise (1).
- ► Remove the retaining ring and the rotating ball from the mouse (2).
- ► Clean the three small wheels in the mouse and the ball with a lint-free cloth.
- ► Replace the ball and the retaining ring (3).
- ► Using both thumbs exert downward pressure on the notches of the retaining ring (4) and turn the ring clockwise. You must feel the ring engage.

Preparation for use and operation

Please take note of the safety information in the chapter "Important notes".

Unpacking and checking the delivery

It is recommended not to throw away the original packaging material! It may be required for reshipment at some later date.

- Unpack all the individual parts.
- Check the delivery for damage incurred during transport.
- Check whether the delivery agrees with the details in the delivery note.

Should you discover that the delivery does not correspond to the delivery note, notify your local sales office immediately.

If you have received drives or boards with your PC, please do not install them until after first-time setup. How to install drives and boards is described in the chapter "System expansions".

Preparing the PC for use

First-time setup includes the connection of the devices (monitor, mouse, keyboard etc.) and the setup of the supplied software.

When you set up the PC for the first time, you should carry out the following steps in the order shown:

1. Decide where you are going to use the PC.
2. Connect the external devices to the system unit.
3. Check the rated voltage of the system unit and connect it to the line voltage.
4. Switch the PC on and follow the instructions on the screen.

Setting up the PC

When installing your PC, give consideration to the recommendations and safety notes in the manual "Safety, Guarantee and Ergonomics".

Set up the PC only in its correct orientation. The points to observe are illustrated on the following pages.

We recommend that you place your equipment on a surface with good anti-slip qualities. In view of the multitude of different finishes and varnishes used on furniture, it is possible that the rubber feet of the devices will mark the surface they stand on.

Do not expose the PC to extreme environmental conditions (see chapter "Technical data"). Protect it from dust, humidity and heat.

Provide at least 200 mm of clearance on the left, in front of and behind the ventilator area of the system unit to ensure adequate ventilation. Do not cover the ventilation areas of the monitor and the fan.

Do not place several system units one above the other.

Connecting devices

The power plug must be disconnected!

Read the documentation on the external device before connecting it.

Do not connect or disconnect cables during a thunderstorm.

Always take hold of the actual plug body. Never unplug a cable by pulling the cable itself!

Connect and disconnect the cables in the order described below.

Connecting cables

- Turn off all power and equipment switches.
- Unplug all power plugs from the grounded power outlets.
- Connect all cables at the system unit and peripherals. You must observe the information provided in the chapter "Important notes".
- Plug all data communication cables into the utility sockets.
- Plug all power cables into the grounded power outlets.

Disconnecting cables

- Turn off all power and equipment switches.
- Unplug all power plugs from the grounded power outlets.
- Unplug all data communication cables from the utility sockets.
- Disconnect all cables from the system unit and peripherals.

Ports for external devices

The ports for external devices are on the rear and on the front of the system unit. The ports available on your device depend on the configuration level you have selected. The standard ports are marked with symbols like those below or similar symbols. Exact details of the position of the ports are supplied in the Technical Manuals for the boards.

Keyboard port

PS/2 mouse port

Video connector

USB - Universal Serial Bus

LAN port

Audio output (Line out)

Audio input (Line in)

Serial port 1

Serial port 2

Parallel interface

Game port

Chipcard reader

Microphone jack

Some of the devices that you connect require special drivers (see the documentation for the connected device and for the operating system).

Connecting the keyboard

i Use only the keyboard cable supplied.

- Plug the round plug of the keyboard cable into the keyboard port on the system unit.

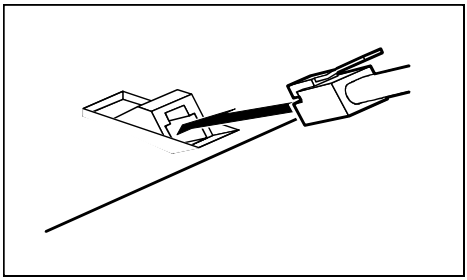

- Plug the other connector of the keyboard cable into the socket on the underside of the keyboard.

Connecting the mouse

- Plug the connector of the mouse cable into the mouse port.

i If you do not attach a mouse at the PS/2 mouse port, you can disable the mouse controller in the *BIOS-Setup* in order to free the IRQ12 for a different application.

Connecting devices with serial or parallel port

- Connect the data cable to the external device.
- Connect the data cable of the external device to the appropriate port on the system unit.

i Most devices that you connect to the serial or parallel port require special drivers. Your operating system already includes many drivers . But if the driver you need is not on the hard disk please install it from the floppy disk supplied with the device or with the application program.

If you need to change the default settings of the serial or parallel port (e.g. address, interrupt), you can do so in the *BIOS Setup*. The default setting for the interfaces are described in the Technical Manual for the system board or in the "BIOS Setup" manual.

Connecting the monitor to the line voltage

- Prepare the monitor as described in the Operating Manual for the monitor.
- Plug the data cable of the monitor into the monitor port of the system unit.

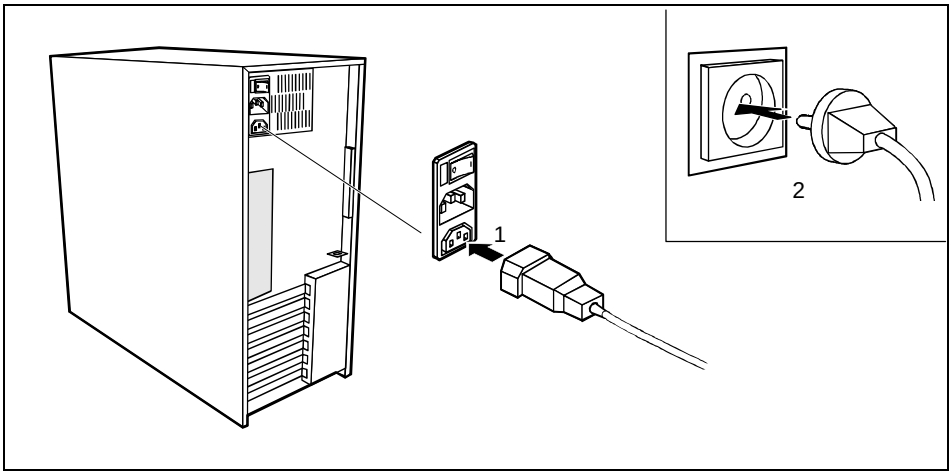

- Depending on the connector, plug the monitor power cable into either the system unit (1) or the grounded power outlet (2).

You may only plug the monitor power cable into the monitor connector if the rated current of the monitor is less than 1.5 A (230 V) or 3 A (115 V). The rated current for the monitor is also given on the monitor itself and in the Operating Manual for the monitor.

Connecting the PC to the line voltage

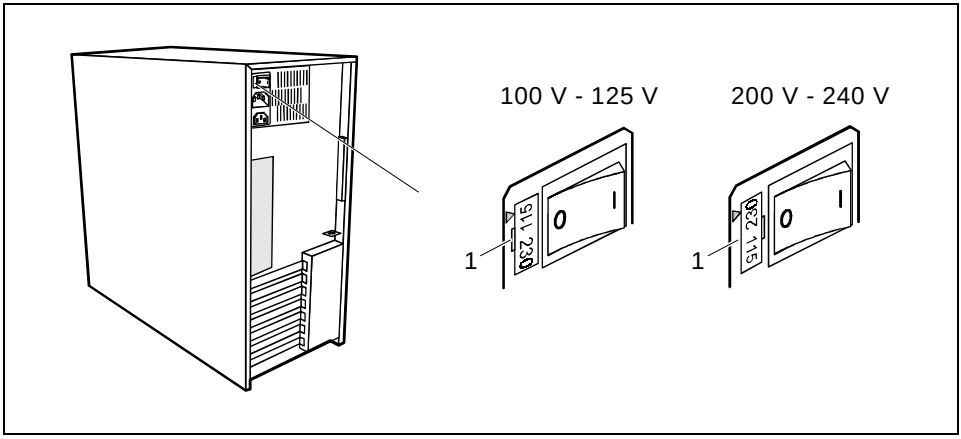

1 = Notch for inserting the screwdriver

► Check the rated voltage.

The value marked with an arrow must agree with the local line voltage:
115 = 100 V to 125 V 230 = 200 V to 240 V

If the rated voltage does not agree with the local line voltage, lift out the plug-in unit with a screwdriver (1), turn it and replace it.

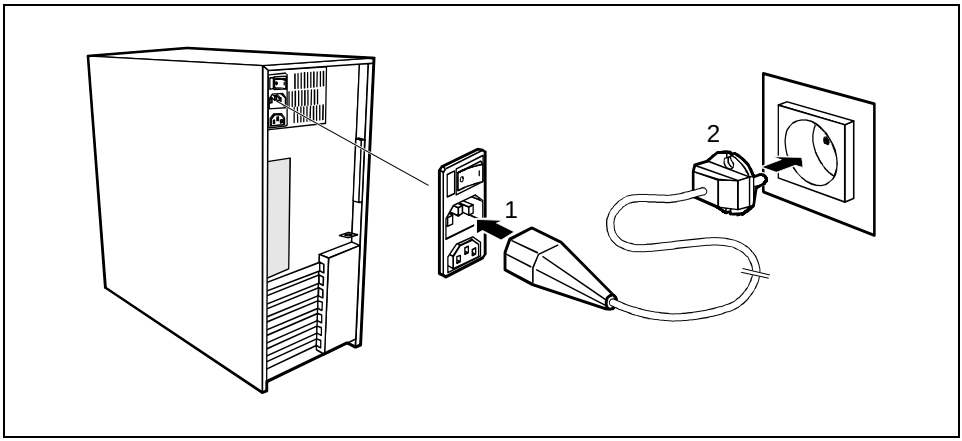

► Plug the system unit's power cable into the system unit (1) and then into the grounded power outlet (2).

Unlocking/locking the system unit

With the casing lock you can mechanically lock the system unit, and with the drive cover you can block access to the drives.

Unlocking the system unit

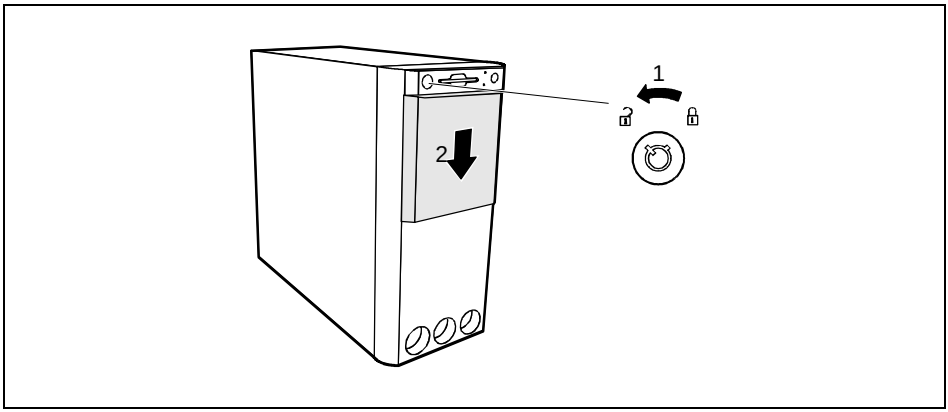

- ► Turn the key counterclockwise (1).
- ► Slide the drive cover in direction of the arrow (2).

Locking the system unit

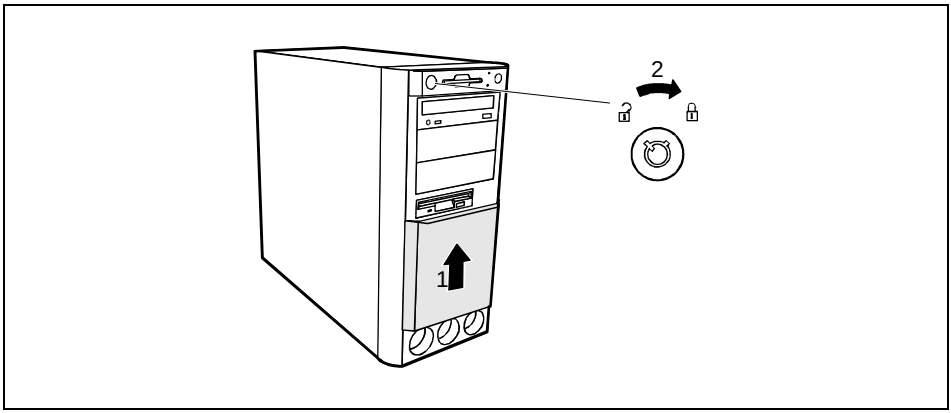

- ► Slide the drive cover in direction of the arrow (1) and turn the key clockwise (2).

Switching the PC on and off

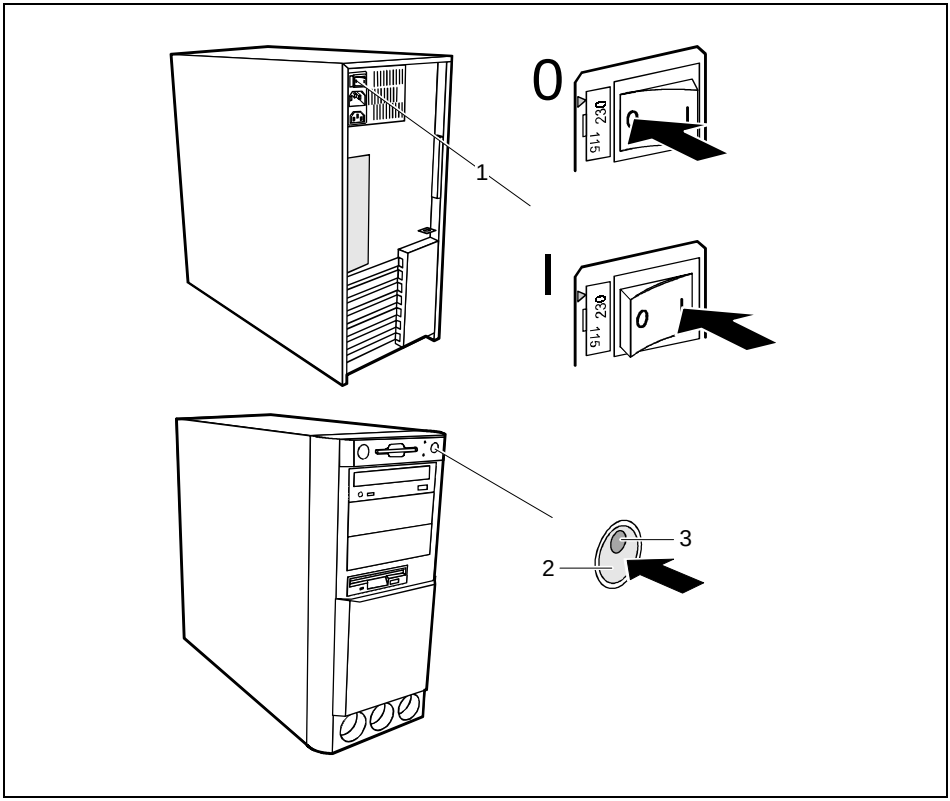

1 = Main switch
2 = ON/OFF switch
3 = Power-on indicator

0 = System unit is switched off
I = System unit is ready-to-operate

System unit is off

The main switch (1) is in position 0, the power-on indicator (3) does not light, and the ON/OFF switch (2) is disabled.

System unit is ready-to-operate

The main switch (1) is in position I and the power-on (3) indicator lights up orange or flashes green/orange. In this mode, you can switch the system unit on with the ON/OFF switch (2). The "ready-to-operate" status corresponds to the "stand-by" status of a TV set. The exact description of the power-on indicator (3) is contained in the section "Indicators on the system unit".

System unit is on

The main switch (1) is in position I and the power-on indicator (3) lights up green. The system unit can be switched ready-to-operate at the ON/OFF switch (2).

Switching on the PC for the first time

When you switch on your PC for the first time the supplied software is set up and configured.

i

If the PC is integrated into a network, the user and server details as well as the network protocol are required. Contact your network administrator if you have any questions about these details.

The license number for Windows is printed on the front cover of the Windows manual supplied.

- Switch your monitor on.
- Switch the system unit on with the ON/OFF switch.

The power-on indicator lights green and the PC is started.

!

While the PC boots, the screen remains dark for up to a minute depending on the system configuration. To see the start-up messages, you can switch off this standard setting in the *BIOS Setup* in the *Quiet Boot* entry.

- Adjust the brightness if necessary (see the Operating Manual for the monitor).

!

Some variants require you to start the software installation by pressing the function key F1.

Once the installation has been started the PC must not be switched off.

You should only reboot the PC during installation if you are requested to do so. Otherwise the installation will be not be performed correctly. If a fault occurs in the installation the contents of the hard disk must be completely restored.

- During installation follow the instructions on the screen.

Consult the operating system manual if there is anything unclear about the requested input data.

Some system configurations do not include a Windows CD in the delivery package. In this case you should create a backup copy after installing Windows so that you can restore the hard disk contents in an emergency.

You need about 40 diskettes for this.

- Create Windows diskettes with the *MSCSD* backup program (create system diskettes) and label them using the labels supplied.

i

You will find further information about the system, drivers, utilities, updates, and manuals etc. on the "Drivers & Utilities" CD supplied.

Switching on the PC

- Switch the monitor on (see the Operating Manual for the monitor).
- Switch the system unit on with the main switch at the rear of the system unit.
- If the power-on indicator lights orange, press the ON/OFF switch at the front of the system unit.

The power-on indicator lights green and the PC is started.

While the PC boots, the screen remains dark for up to a minute depending on the system configuration. To see the start-up messages, you can switch off this standard setting in the *BIOS Setup* in the *Quiet Boot* entry.

If you have assigned the system password, you must enter this when requested to do so, in order to start the operating system.

Switching off the PC

- Shut down the operating system properly. Windows in the *Start* menu via the *Quit* function.
- If the operating system does not automatically switch the system unit off, switch the system unit to ready-to -operate by pressing the ON/OFF switch or turn it off by pressing the main switch when requested to do so.

If the system unit is ready-to-operate, the power-on indicator lights up orange. The system unit consumes a minimum of energy and can be switched on by an external device (provided that the remote-on functionality is enabled in *BIOS Setup*).

When the system unit is switched off with the main switch the power-on indicator goes off after approx. 15 seconds. The system unit no longer uses any power.

The main switch and the ON/OFF switch do not disconnect the system unit from the line voltage. To disconnect the line voltage completely, remove the power plug from the grounded power outlet.

- Switch the monitor off (see the Operating Manual for the monitor).

Placing a PC (with soft power off function) in a ready-to-operate state by means of software

Prerequisite: Your system must support switching off with software and this functionality must be enabled in *BIOS Setup* (*Soft Power OFF - Enabled*). In addition, the soft off software must be installed on Windows NT systems.

You can switch your PC ready-to-operate under Windows 9x or Windows NT via the *shutdown the Computer* menu or by using the *DeskOff* program.

Indicators on the system unit

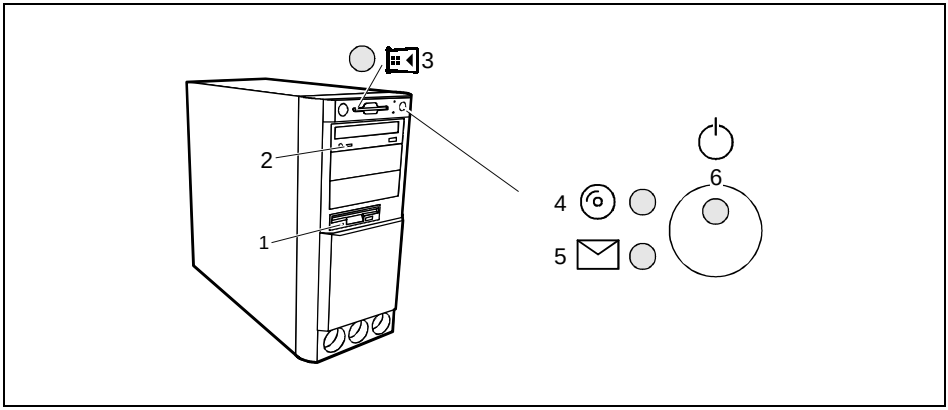

1 = Floppy disk indicator
2 = CD-ROM indicator
3 = Chipcard reader indicator
4 = Hard disk indicator
5 = Message indicator
6 = Power-on indicator

1 - Floppy disk indicator

The indicator lights up when the floppy disk drive of the system unit is accessed. You may only remove the floppy disk when the indicator is dark.

2 - CD-ROM indicator

The indicator lights up when the CD-ROM drive of the system unit is accessed. You may only remove the CD when the indicator is dark.

3 - Chipcard reader indicator

The indicator lights up when the chipcard reader is accessed. You may only remove the chipcard when the indicator is dark.

4 - Hard disk indicator

The indicator lights up when the hard disk drive of the system unit is accessed.

5 - Message indicator

The display glows or flashes when the system has received a message or has reported a malfunction. A detailed description can be found in the Technical Manual for the system board.

6 - Power-on indicator

- green:
  The System unit is on.
- orange:
  The System unit is ready-to-operate.
  In this mode the PC consumes very little power and can be switched on at the ON/OFF switch. If the remote-on function is *Enabled* in the *BIOS Setup*, the system unit can be switched on by an incoming message (e. g. fax, telephone call).
- flashes green/orange:
  The indicator only flashes on systems which support the ACPI function **(A**dvanced **C**onfiguration and **P**ower **I**nterface).
  The system unit is in the energy-saving mode (standby). After being switched on with the ON/OFF switch, the PC returns to the state it was in before the energy-saving mode. In the energy-saving mode the system unit may not be switched off with the main switch or disconnected from the mains supply, as this may otherwise result in data loss.
- does not glow:
  The system unit is switched off.

Keyboard

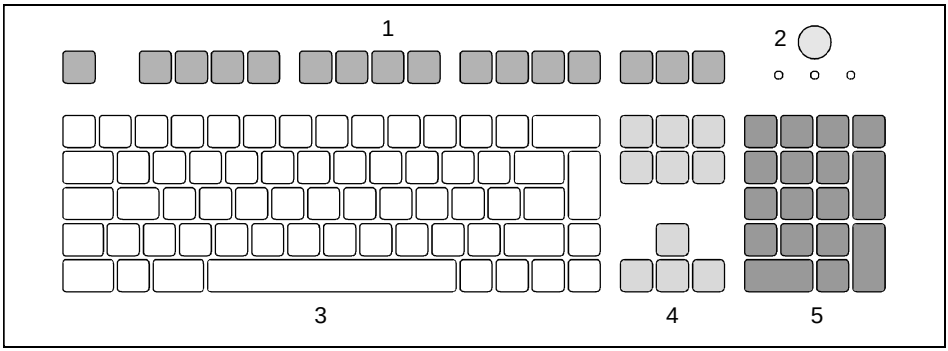

1 = function keys
2 = ON/OFF switch (optional)
3 = alphanumeric keypad
4 = cursor control keys
5 = numeric keypad (calculator keypad)

Important keys and key combinations

The following description of keys and key combinations refers to MS Windows. Details of other keys and key combinations can be found in the documentation of the relevant application program.

ON/OFF switch
Depending on the setting in the *BIOS setup*, the system can be switched on, off or on and off with this switch.

Enter key
confirms or starts the marked selection. The enter key is also referred to as the "Return" key or "Carriage Return".

Start key
invokes the *START* menu of Windows.

Menu key
invokes the menu for the marked item (Windows).

Shift key
enables upper-case letters and the upper key symbols to be displayed.

Alt Gr

Alt Gr key (e.g. German keyboard)
produces a character shown on the right-hand side of a key (e. g. the character "****" on the key ß of the German keyboard).

% 5 € | $ 4 €

Euro key (American and English variant)
enables the output of the euro symbol (Windows).

Num Lock

Num Lock key
by pressing the Num Lock key you switch between the upper- and lower-case levels of the calculator keypad.
At upper-case level (Num Lock indicator lit) the digit and comma keys are active.
At lower-case level (Num Lock indicator not lit) the cursor control functions are active in the calculator keypad.

Ctrl

Ctrl key
starts key combination actions.

Ctrl + Alt + Del

Warm boot
restarts your PC. First hold down the Ctrl and Alt key, and then press the Del key. With Windows 95 the Task Manager appears first. The warm start is then carried out the second time.

Working with floppy disks

Follow the instructions supplied by the vendor of the floppy disks.

Never clean the floppy disk drives with cleaning disks. Even just one attempt would destroy the read/write head in the disk drive within 20 seconds.

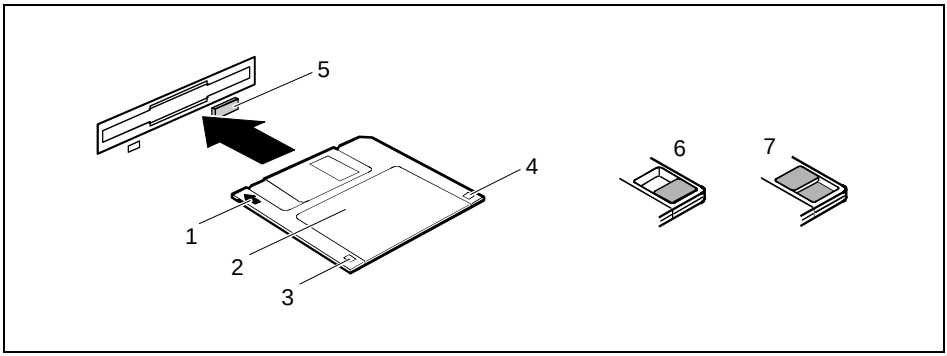

1 = Insertion direction
2 = Label area
3 = Write protection tab for a 720 Kbyte or a 1.44 Mbyte floppy disk
4 = Identification of a 1.44 Mbyte floppy disk or write protect tab on a 120 Mbyte floppy disk
5 = Eject button for inserted floppy disks
6 = Floppy disk is write protected
7 = Floppy disk is not write-protected

- ► To insert a floppy disk, push it into the drive in the insertion direction (1) until it engages. The label should be facing upward.
- ► To remove the floppy disk, press the eject button (5).

The write-protect slider enables you to protect the data on the floppy disk from inadvertent overwriting or deletion.

- ► To protect the data on the floppy disk from being overwritten, push the write-protect slider to position (6). The hole is now visible.

To remove write protection, push the slider to position (7). The hole is now covered.

Settings in BIOS Setup

The *BIOS Setup* menu allows you to set your hardware configuration and system functions. When the PC is delivered, the default entries are valid (see Technical Manual for the system board or in the manual "BIOS Setup"). You can customize these settings to your requirements in *BIOS Setup*.

The technical manual of the system board or the "BIOS Setup" manual shows you how to open and use the *BIOS Setup*. The menus and setting options provided by *BIOS-Setup* are also described in detail.

Property and data protection

The software functions and mechanical lock on your PC enables you to protect your system and personal data in a number of ways against unauthorized access. By combining these options, you can achieve optimum protection for your system.

Locking the system unit mechanically

With the casing lock you can mechanically lock the system unit, and with the drive cover you can block access to the drives.

Access authorization via chipcard

In systems that are equipped with a chipcard reader, access can be restricted to users who have a corresponding chipcard.

Security functions under Windows

Under MS-Windows you can activate a screen saver and protect it with a password. Only those users who know the password can deactivate the screen saver and access any open files. Detailed information on screen savers under MS Windows is provided by the associated help function.

Security functions under Windows NT

You can use the *SSLAUNCH* program to start the screen saver *POWERSAVER* immediately. These programs are located on the "Drivers & Utilities" CD.

Information on *POWERSAVER* and *SSLAUNCH* can be found in the *POWERSAV.HLP* and *SSLAUNCH.EXE* files.

Security functions under Windows 9x

You can lock the keyboard and mouse with a password-protected screen saver.

Theft protection and lead sealing

With a chain lock and the hole in the tab (1) or with the Kensington Lock device (2) and with a Kensington MicroSaver you can protect your unit from theft.

To prevent unauthorized persons from opening the system unit, the casing can be lead-sealed. To do this, use the eyes on the back of the casing.

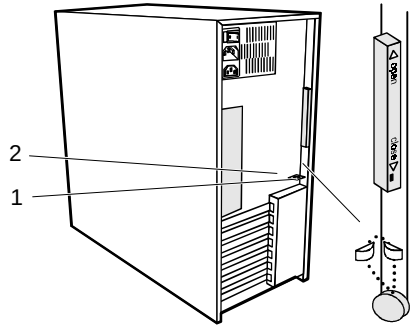

BIOS Setup security functions

The *Security* menu in *BIOS Setup* offers you various options for protecting your personal data against unauthorized access, e. g.:

- Preventing unauthorized BIOS Setup calls
- Preventing unauthorized system access
- Preventing unauthorized access to the settings of boards with their own BIOS
- Preventing system booting from the diskette drive
- Activating virus warnings
- Preventing unauthorized writing of diskettes
- Protecting BIOS from overwriting
- Protecting PC from being switched on by an external device

By combining these options, you can achieve optimum protection for your system.

You will find a detailed description of the *Security* menus and how to assign passwords in the Technical Manual for the system board or in the "BIOS Setup" manual.

Troubleshooting and tips

Take note of the safety notes in the manual "Safety, Guarantee and Ergonomics" and in the chapter "Preparation for use and operation", when you connect or disconnect cables.

If a fault occurs, try to correct it as described:

- in this chapter
- in the documentation of the connected devices
- in the help systems of the software used.

If you fail to correct the problem, proceed as follows:

- ▶ Switch the PC off.
- ▶ Make a note of the steps and the circumstances that led to the fault. Also make a note of any error messages displayed and the Ident-No. of your device.
- ▶ Contact your sales office or customer service.

Installing new software

When installing programs or drivers, important files may be overwritten and modified. To be able to access the original data in the case of any problems following installation, you should make a backup of the your hard disk prior to installation.

Power-on indicator remains dark after you have switched on your device

This may have the following causes:

The line voltage supply is faulty

- ▶ Check that the power cable is plugged properly into the system unit and grounded power outlet.
- ▶ Switch the PC on at the main switch.

Internal power supply overloaded

- ▶ Disconnect the power plug of the system unit from the grounded power outlet.
- ▶ Wait for a moment.
- ▶ Plug the power plug into the grounded power outlet again.
- ▶ Switch the PC on at the main switch.

The screen stays blank

If your screen remains blank this may have the following causes:

Monitor is switched off

- Switch your monitor on.

The PC starts

While the PC boots, the screen remains dark for up to a minute depending on the system configuration. To see the start-up messages, you can switch off this standard setting in the *BIOS Setup* in the *Quiet Boot* entry.

Screen has been blanked

- Press any key on the keyboard.

or

- Deactivate screen blanking (screen saver). Enter the appropriate password.

Brightness control is set to dark

- Set the brightness control to light. For detailed information, please refer to the Operating Manual supplied with your monitor.

Power cable or monitor cable not connected

- Switch off the monitor and the system unit.
- Check that the power cable is properly connected to the monitor and system unit or to the grounded power outlet.
- Check that the monitor cable is properly connected to the system unit and monitor (if not permanently attached).
- Switch on the monitor and the system unit.

Wrong monitor has been set under Windows NT

- Restart the PC in standard VGA mode.
- Set the desired resolution in the *Control Panel* window using the *Display* program, and adjust the monitor display as described in the Operating Manual.

Wrong monitor has been set under Windows 9x

- Restart the PC.
- If the message *Starting Windows 9x* appears, press function key F8.

The Windows 9x start menu appears.

- Select the option *Safe mode* or *Safe mode with network support*.
- Set the correct values for the attached monitor by selecting *Start* - *Settings* - *Control Panel* - *Display* - *Settings*.

The wrong RAM memory modules have been inserted

See the Technical Manual for the system board for information on which memory modules can be used.

No mouse pointer displayed on the screen

- Shut down the operating system properly.
- Switch the PC off.
- Check that the mouse cable is properly connected to the system unit.
  If you use an adapter or extension lead with the mouse cable, check the plug-in connection.
- Make sure that only one mouse is connected.
- Switch the PC on.
- The mouse controller must be enabled, if you use a PS/2 mouse. Check in the *BIOS Setup* that the mouse controller is enabled.
- Check that the mouse driver is properly installed and is present when the application program is started. Detailed information can be found in the User Guide of the mouse or application program.

The floppy disk cannot be read or written

- Check that the write protection of the floppy disk or the floppy disk drive is activated (refer also to the Technical Manual of the system board or in the manual BIOS).
- Check the relevant entries for *Diskette A:* or *B:* in the *Main* menu of the *BIOS Setup*.
- Check that the floppy disk drive controller is enabled (refer also to the Technical Manual of the system board or in the manual "BIOS Setup").
- Check that the cables of the floppy disk drive are properly connected (refer to chapter "System expansions").

Time and/or date is not correct

- Set the time and/or date. You can set the time and date in the *BIOS Setup* or in the operating system.

i

If the time and date are repeatedly wrong when you switch on your PC, the battery is flat. Change the lithium battery as described in the Chapter "System expansions".

Error messages on the screen

Error messages and their descriptions are listed in the Technical Manual of the system board or in the "BIOS Setup" manual and in the documentation of the installed software.

Restoring the hard disk contents

- Instructions for this purpose can be found in the documentation (booklet) of the CD "Drivers & Utilities".

Tips

The PC cannot be switched off with the ON/OFF switch

Cause: The PC has not been switched on with the ON/OFF switch.

- ► Press the ON/OFF switch again.

Cause: System crash

- ► Press the ON/OFF switch for at least four seconds, until the device switches off.

PC switches on briefly and then off again

The power cable has been plugged in or the device was switched on with the main switch. For technical reasons, this brief switching on and off is necessary.

Out of system resources

If you have too many applications running at once, you may experience problems due to a lack of system resources. If this happens, you should close applications you do not require or call the applications in a different order.

BIOS settings in power management do not become active

The *Auto insert notification* setting may be active for the CD-ROM drive. This setting causes Windows 95 to inquire about any modifications on the drive at regular intervals. Because of this the timer for the idle time cannot time out.

To activate power management, proceed as follows:

- ► In Windows 95, select *Start* - *Settings* - *Control Panel* - *System* - *Device Manager* - *CD-ROM*.
- ► Select the installed CD-ROM drive from the list.
- ► Select *Settings*.
- ► Deactivate the *Auto insert notification* box.

CD-ROM drive

Information on the CD-ROM drive can be found in the manual of the CD-ROM drive or on the "Drivers & Utilities" CD.

Other manuals

Other manuals are contained on the "Drivers & Utilities" CD.

System expansions

It may be necessary to update the BIOS when carrying out a system expansion or hardware upgrade. In this instance, please contact our service.

When installing components with a high power loss, make sure that the maximum permissible temperatures of the individual components are not exceeded

This chapter describes all the activities required to modify your PC hardware (e.g. installing boards or drives).

Memory and processor upgrading are described in the Technical Manual for the system board.

Read the supplied documentation before installing new drives and/or boards.

Refer to the Technical Manual for the system board before making any extensions on the system board.

Opening the system unit

- Switch the PC off.

Please take note of the safety information in the chapter "Important notes".

Pull the power plug out of the power outlet!

- If any cables attached to the system unit are obstructing you, pull out the connectors on the system unit.
- Place the system unit in a convenient working position.

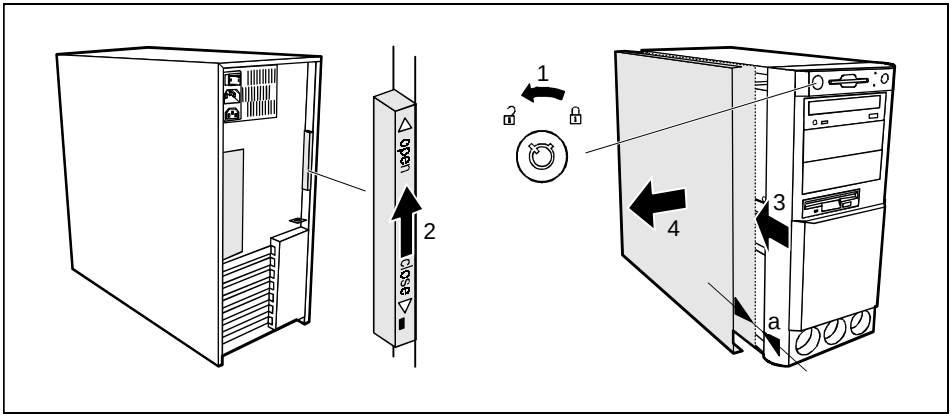

- Unlock the system unit (1).
- Unlock the left-hand side cover with the locking slide at the rear of the casing by sliding it upwards (2).
- Push the side cover in the direction of the arrow (3) until the distance (a) is approximately 10 mm.
- Pull the side cover out of the casing (4).

Assembling the system unit

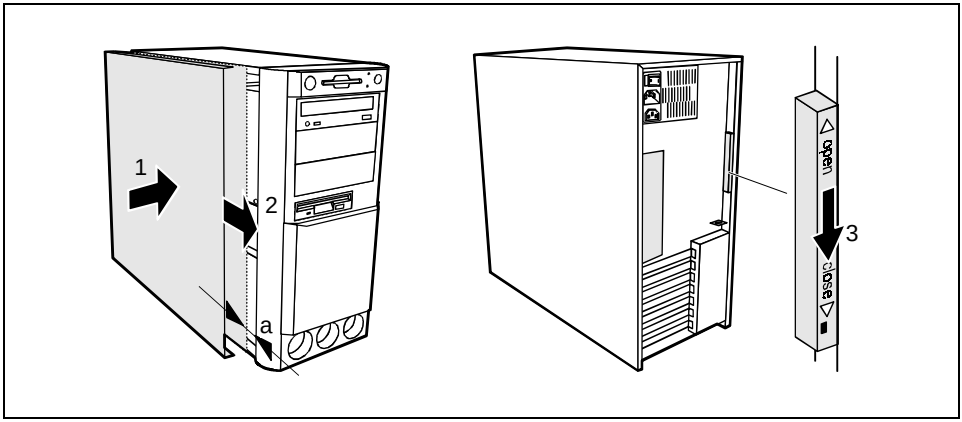

- Place the side cover on the system unit in the direction of the arrow (1) so that the distance (a) is approx. 10 mm.
- Push the side cover in the direction of the arrow (2) until it engages.
- Lock the side cover using the locking slide at the rear (3).
- Return the system unit to its original position.
- If you have disconnected cables, reconnect them at the rear.

Installing and removing a board

Observe the notes on installing and removing boards in the chapter "Important notes".

Old ISA boards which require a -5 V power supply are not supported.

The number, position and constellation of the board slots on the system board can be found in the technical manual for the system board. Boards may be installed when the device is shipped.

Installing a board

- Open the system unit (see "Opening the system unit").

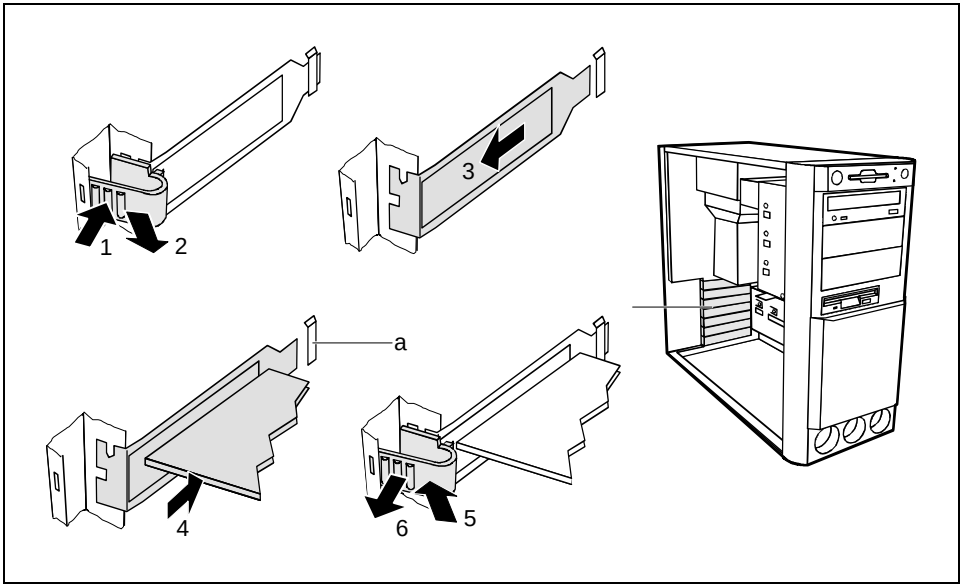

- Press on the clip in the direction of the arrow (1) and remove it (2).
- Remove the rear slot cover plate from the slot (3).

Do not dispose of the rear slot cover plate. For cooling, protection against fire and in order to comply with EMC regulations, you must refit the rear slot cover plate if you remove the board.

- Take the new board out of its packaging.
- Make the required settings for the board.
- Push the board into the slot (4).
  Ensure that the end of a long board without angle bracket fits into the corresponding guide of the system unit. Ensure also that the point of the angle bracket slots into guide (a).
- Press the board into the slot so that it engages.
- Replace the clip (5) which fixes the board. Make sure that the clip engages when released (6).
- If necessary, plug the lines on the board.
- Close the system unit (see "Assembling the system unit").

If you have installed or removed a PCI board, please check in the *BIOS Setup* the settings for the relevant PCI slot. If necessary, change the settings. Further information is provided in the documentation for the PCI board.

Removing a board

- Open the system unit (see "Opening the system unit").
- Remove the lines connected to the board.

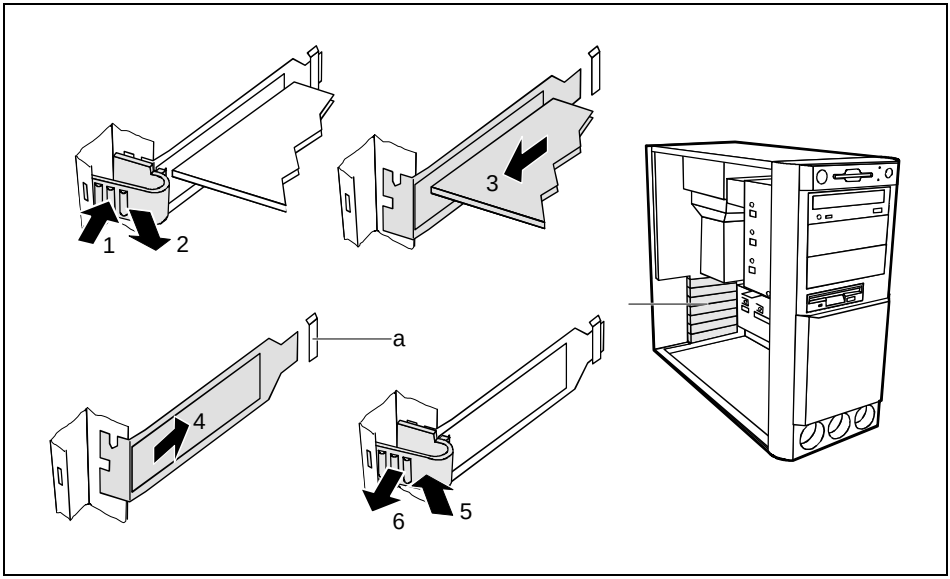

- Press on the clip in the direction of the arrow (1) and remove it (2).
- Remove the board from the system unit (3).
- Place the board into an appropriate packaging.

For cooling, protection against fire and in order to comply with EMC (electromagnetic compatibility) regulations, you must refit the rear slot cover plate.

- Push the rear slot cover plate into the slot (4). Ensure that the point of the cover engages into the guide (a).
- Replace the clip (5) which fixes the board. Make sure that the clip engages when released (6).
- Close the system unit (see "Assembling the system unit").

If you have installed or removed a PCI board, please check in the *BIOS Setup* the settings for the relevant PCI slot. If necessary, change the settings. Further information is provided in the documentation for the PCI board.

Installing and removing drives

The system unit houses a total of four accessible drives (three 5 1/4-inch drives and one 3 1/2-inch drive) and two non-accessible half-height (Slimline) drives .

IDE drives

By default four IDE drives are supported. Ideally hard disks are connected to IDE port 1, and accessible drives, for example CD-ROMs, to IDE port 2 (see also the Technical Manual for the system board).

SCSI drives

If you want to install an SCSI drive, you require an SCSI controller and an SCSI cable. Note that:

- not every SCSI controller is suitable for operating SCSI hard disks
- each SCSI device must be assigned its own SCSI-ID
- The SCSI cable must always be terminated at the end, either by a drive or by a terminating resistor on the cable. The terminating resistors of all other SCSI devices attached must not be activated or connected.
- Depending on the SCSI technology (UW, U2W), an adapter may be required for connecting the SCSI drives with a 50-pin connector.

Installing an accessible drive

▶ Open the system unit (see "Opening the system unit").

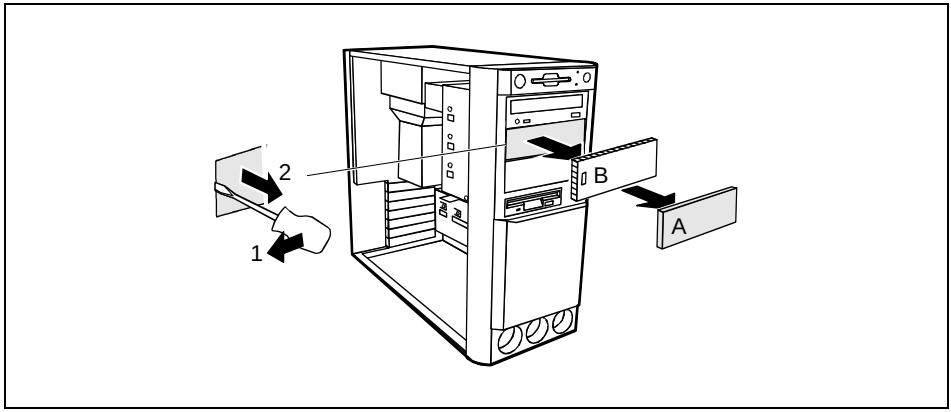

▶ Pry the plastic drive cover (A) out of the front cover.

▶ Pry the shielding plate (B) on left-hand side out of the bay.

Do not throw away the covers. If you remove the drive again later, you will have to reinstall the covers.

- Take the new drive out of its packaging.
- Make the required settings on the drive (if necessary, on installed drives as well).

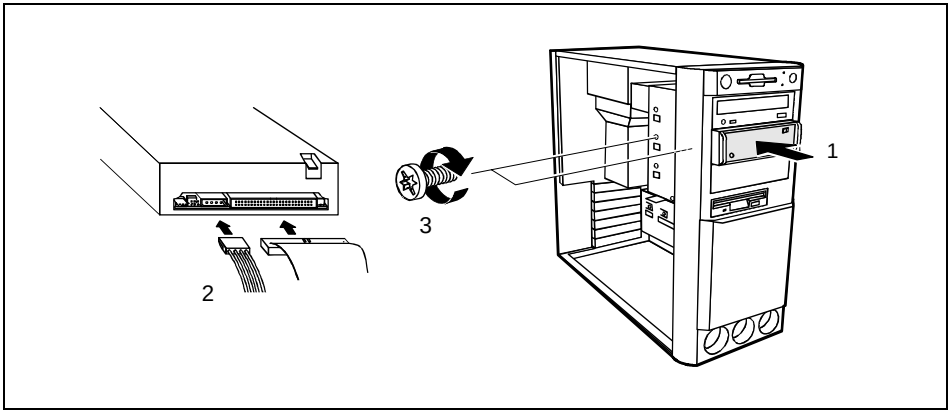

- Slide the drive into the system unit (1).
- Plug the connectors of the data cable and the power supply cable into the drive (2).
- Fasten the drive with the screws (3).
- Close the system unit (see "Assembling the system unit").

i If necessary, you must adapt the entry for the drive in the Setup menu.

Removing an accessible drive

- Open the system unit (see "Opening the system unit").

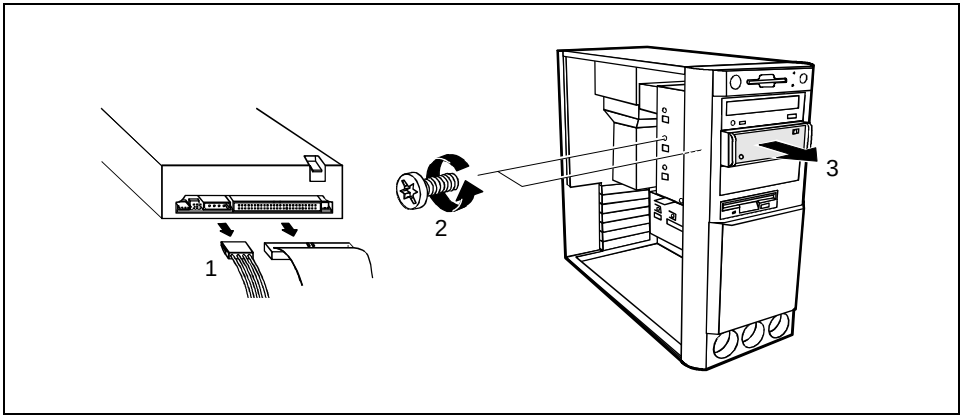

- Pull the data and the power supply connectors from the desired drive (1).
- Remove the screws (2) and take the drive out of the system unit (3).

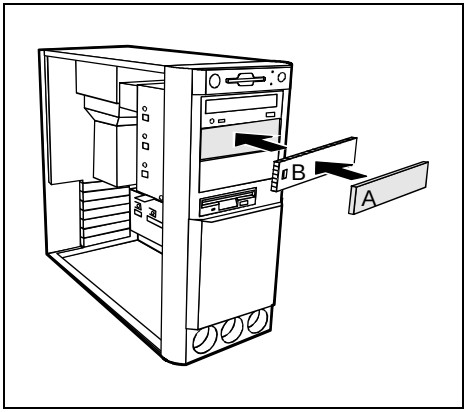

- Insert the shielding plate (B) on the right-hand side on the installation bay and press it in.
- Press the plastic drive cover (A) into the front panel until it snaps in place.
- Close the system unit (see "Assembling the system unit").

i If necessary, you must adapt the entry for the drive in the Setup menu.

Changing the floppy disk drive

- Open the system unit (see "Opening the system unit").

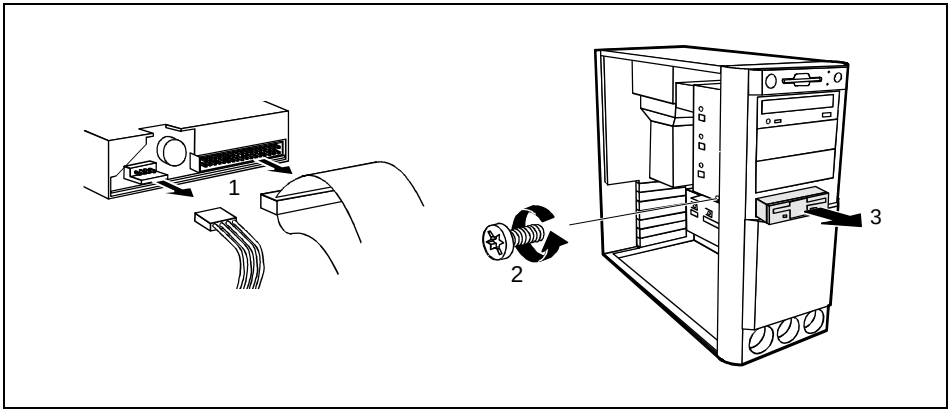

- Pull the data and the power supply connectors from the floppy disk drive (1).
- Remove the screw (2).
- Take the drive out of the system unit (3).
- Take the new floppy disk drive out of its packaging.

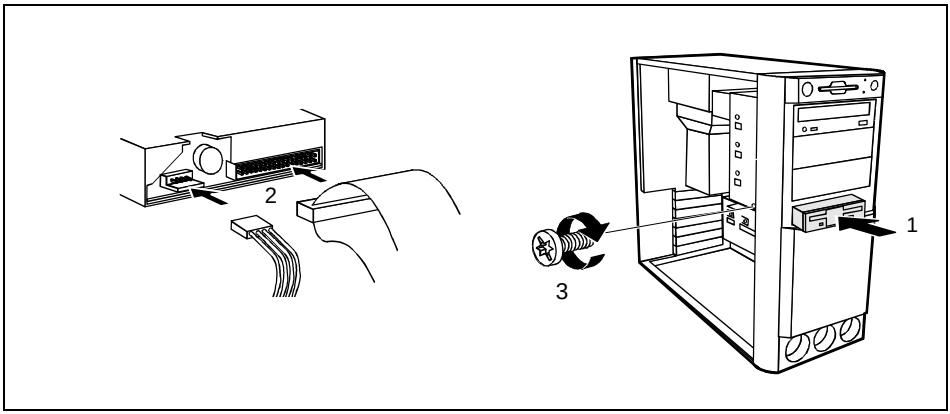

- Slide the drive into the system unit (1).
- Plug the data and the power supply connectors into the floppy disk drive (2).
- Fasten the drive with the screw (3).
- Close the system unit (see "Assembling the system unit").

i If necessary, you must adapt the entry for the drive in the Setup menu.

Installing or removing the hard disk drive

- Open the system unit (see "Opening the system unit").

Removing the hard disk carrier

- Pull the data and power supply connectors from the hard disk drive or the hard disk drives.

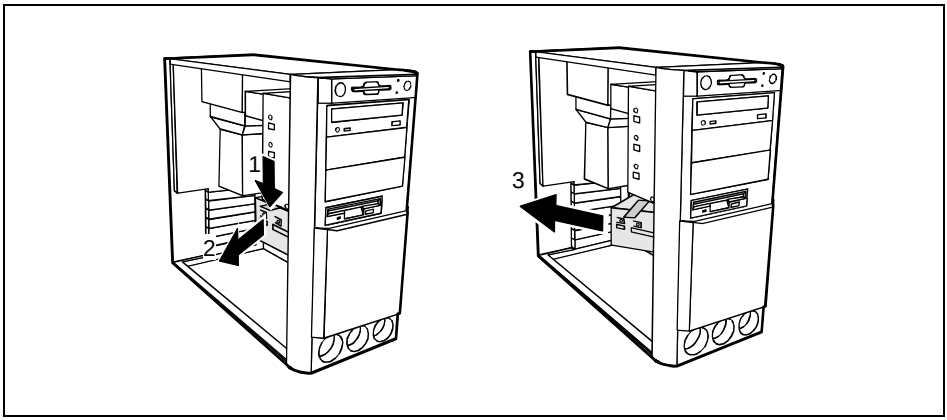

- Press the unlocking device in the direction of the arrow (1).
- Swivel the drive carrier in the direction of the arrow (2).
- Remove the drive carrier in direction of the arrow (3).

Installing the first hard disk drive

- Take the new hard disk drive out of its packaging.
- Make the required settings (e.g. master-slave settings) on the drive.

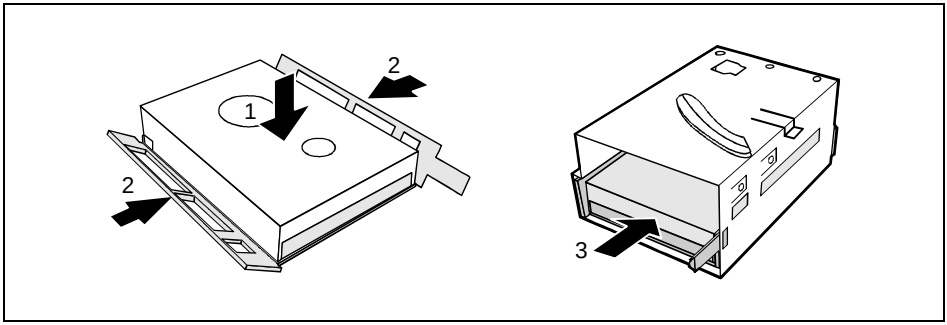

- Insert the hard disk drive into the plastic bracket (1). The drive must engage in the plastic nipple.
- Fold the plastic bracket in the direction of the arrow (2) on the hard disk drive.
- Push the hard disk drive into the drive bracket until the plastic bracket engages (3).

Installing the second hard disk drive

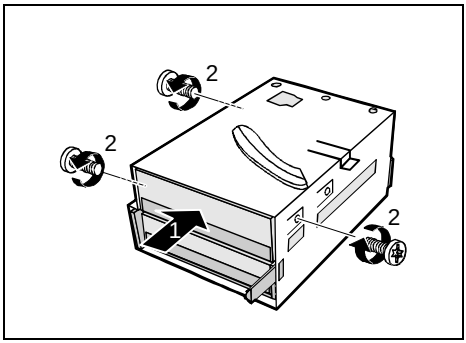

- Take the new hard disk drive out of its packaging.
- Make the required settings (e.g. master/slave, stand alone) on the drives.
- Slide the hard disk drive into the drive carrier (1).
- Fasten the drive with the screws (2).

Removing the first hard disk drive

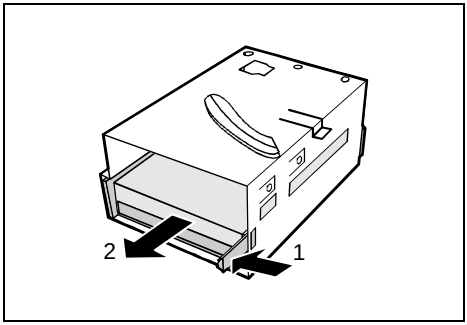

- Lightly press on the clip (1).
- Pull the hard disk drive out of the carrier (2).

- Press on the clip (1).
- Pull the hard disk drive out of the carrier (2).

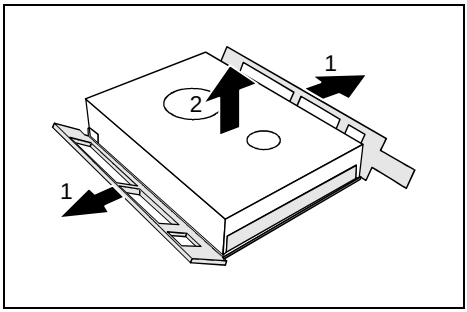

- Fold the plastic bracket in the direction of the arrow (1).
- Remove the hard disk drive (2).

Removing the second hard disk drive

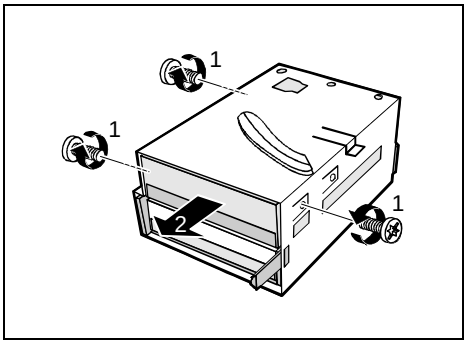

- Remove the screws (1).
- Pull the hard disk drive out of the carrier (2).
- Make the required settings on the remaining hard disk drive (e.g. stand alone).

Installing the hard disk carrier

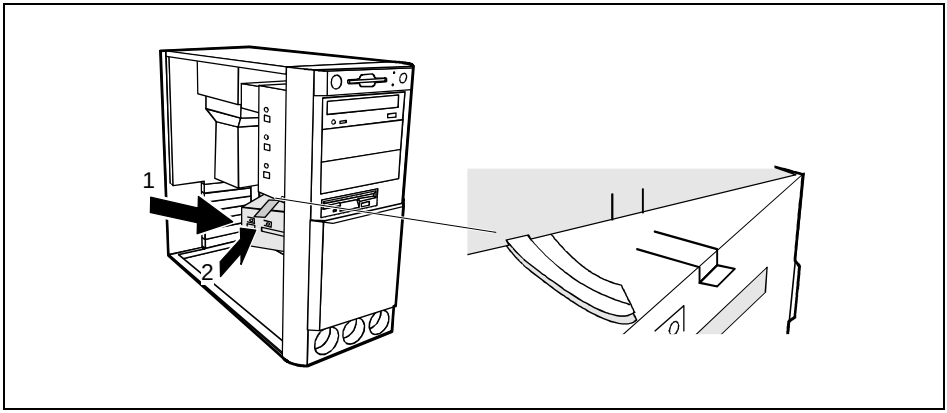

- Plug the data and the power supply connectors into the hard disk drive or into the hard disk drives.
- Push the drive carrier into the system unit in the direction of the arrow (1).
- Swivel the drive carrier in the direction of the arrow (2) until it clicks into position. Please ensure that the guide rail is in the groove.
- Close the system unit (see "Assembling the system unit").

i If necessary, you must adapt the entry for the drive in the Setup menu.

Installing a hard disk drive in the front bay

- Open the system unit (see "Opening the system unit").
- Make the required settings (e.g. master-slave) on the hard disk drives.

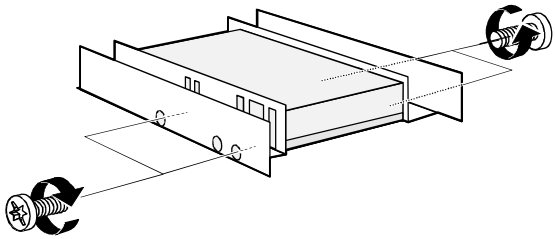

- Fasten the drive with the four screws.
- Install the installation frame with the drive in the desired front bay (see "Installing an accessible drive").
- Close the slot with the panel. Ensure that the cover engages.
- Close the system unit (see "Assembling the system unit").

Installing/removing a chipcard reader

- Open the system unit (see "Opening the system unit").

Removing the hard disk carrier

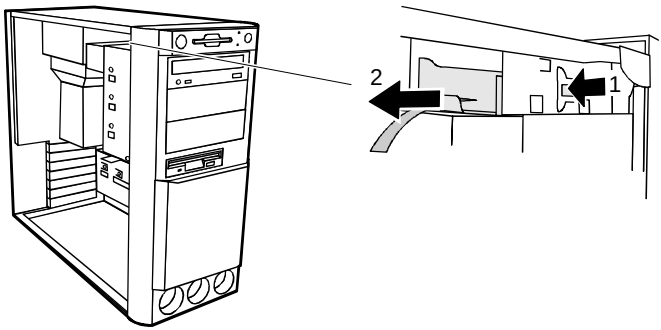

- Press on the clip (1).
- Pull the carrier for the chipcard reader out of the system unit in the direction of the arrow (2).

Installing a chipcard reader

Use the carrier from your device even if an additional carrier may be enclosed with the chipcard reader.

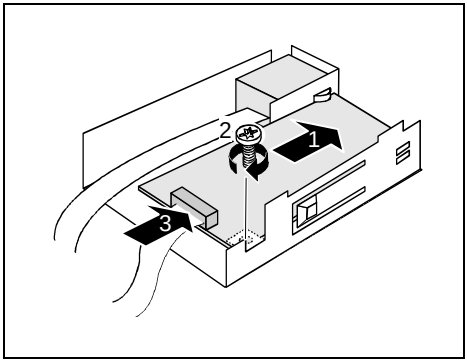

- ► Remove the protector panel at the front of the carrier.
- ► Push the chipcard reader board into the guide rail of the carrier (1) with the component's side upwards.
- ► Fix the board with the screw (2).
- ► Fix the cable on the chipcard reader (3) and on the connector for the chipcard reader on the system board (see the Technical Manual of the system board).

Installing the hard disk carrier

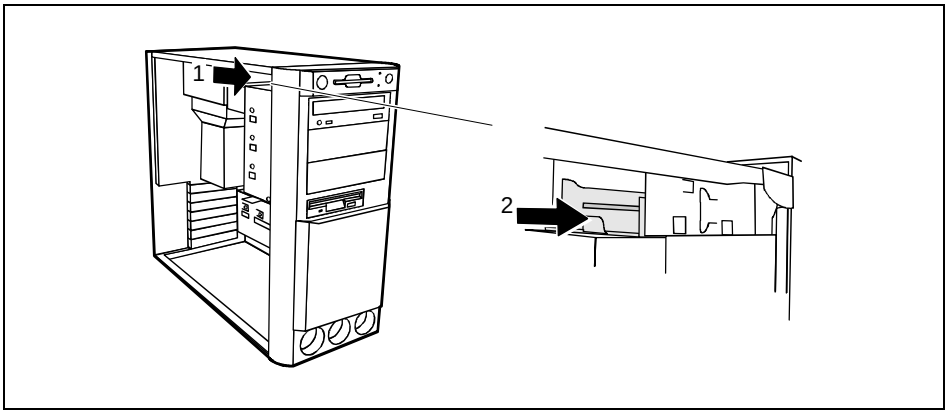

- ► Lift the chipcard reader into the system unit (1).
- ► Push the chipcard reader into the carrier until it clicks into position (2).

i With the chipcard reader connected, no devices may be connected to serial port 2.

Installation opening for 2nd serial port

An installation opening for the 2nd serial port is provided on the back of the casing. As a result, this means no board slot is occupied.

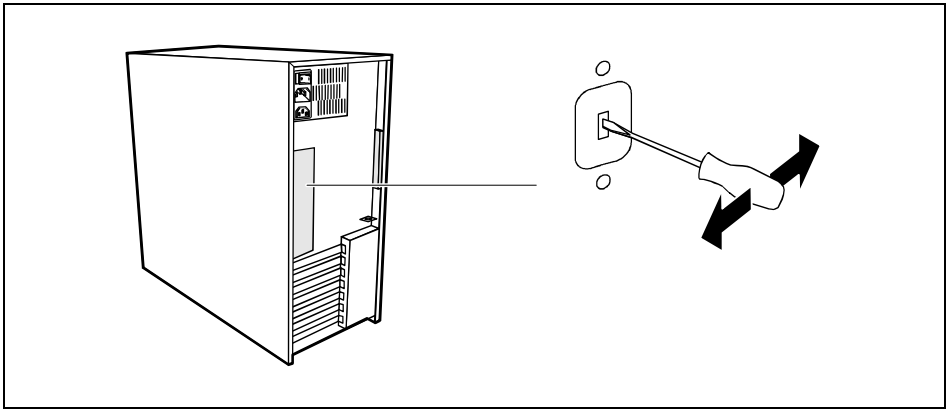

- Insert a screwdriver into the opening and break out the pre-stamped installation opening by moving back and forth.

Extensions on the system board

Details of how and if you can upgrade the main memory or the processor of your PC are provided in the Technical Manual for the system board. Below the necessary steps are described to enable you to work on the system board.

- Open the system unit (see "Opening the system unit").

Upgrading main memory

- Upgrade the memory as it is described in the Technical Manual for the system board.
- Close the system unit (see "Assembling the system unit").

Replacing processor and lithium battery

To replace the processor and the lithium battery, you must remove the ventilation duct.

Removing ventilation duct

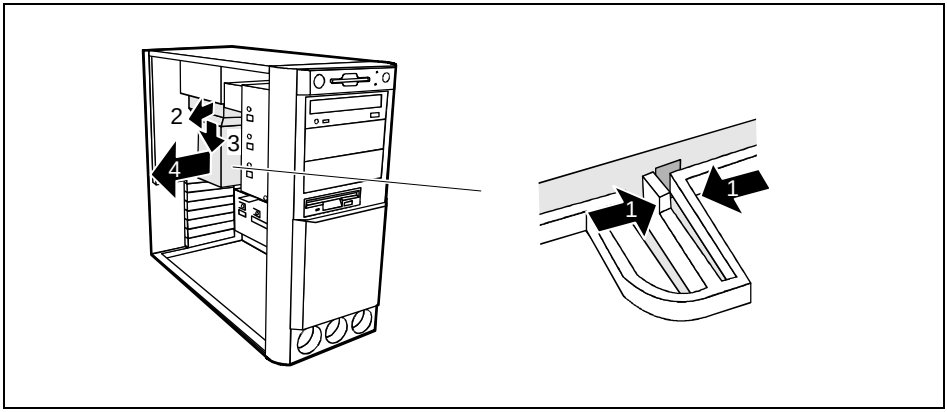

- ► Press the clip together (1).
- ► Lift the ventilation duct slightly (2) and guide the ventilation duct out of the guide holes (3).
- ► Remove the ventilation duct from the unit (4).

You have free access to the locations.

Replacing processor

- ► Make the desired expansions (see the Technical Manual for the system board).

Replacing lithium battery

Incorrect replacement of the lithium battery may lead to a risk of explosion.

The lithium battery may be replaced only with an identical battery or with a type recommended by the manufacturer.

Do not throw lithium batteries into the trashcan. It must be disposed of in accordance with local regulations concerning special waste.

Make sure that you insert the battery the right way round. The plus pole must be on the top!

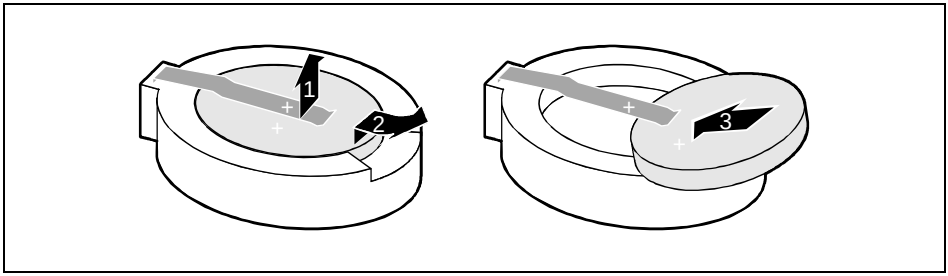

- Lift the contact (1) a few millimeters and remove the battery from its socket (2).
- Insert a new lithium battery of the same type in the socket (3).

Installing ventilation duct

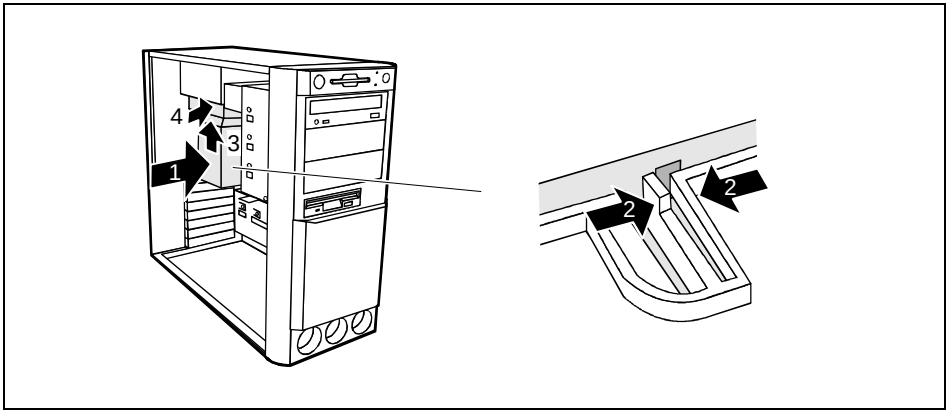

- Lift the ventilation duct into the unit (1)
- Press the clip together (2).
- Insert the ventilation duct into the guide holes (3).
- Press the ventilation duct downward until the clip engages (4).
- Close the system unit (see "Assembling the system unit").

Technical data

Electrical data

Regulations complied with:	EN 60950 / VDE 0805 UL 1950 CSA 22.2 No.950
Protection class:	I
Rated voltage range: (selectable)	100 V to 125 V / 200 V to 240 V
Frequency:	50 Hz - 60 Hz
Max. rated current	
• System unit with monitor socket:	100 V - 125 V / 7.0 A 200 V - 240 V / 3.5 A
• Monitor socket (output)	100 V - 125 V / 3.0 A 200 V - 240 V / 1.5 A
Typical power draw in operation:	< 35 W *)
Power draw in energy saving mode:	< 28 W *)
Power draw in the 'ready' status	< 3 W *)

Dimensions

Width/Depth/Height:	205 mm/500 mm/443 mm
Weight:	ca. 13 kg (127.53 N) in basic configuration

Environmental conditions

Environment class (3K2)	DIN IEC 721 part 3-3
Environment class (2K2)	DIN IEC 721 part 3-2
Temperature:	
• Operating (3K2)	15 °C .... 35 °C
• Transport (2K2)	-25 °C .... 60 °C

Condensation in operating must be avoided.

Clearance required to ensure adequate ventilation:	
• left-hand side	min. 200 mm
• front	min. 200 mm
• rear	min. 200 mm

*) These values only apply for a SCENIC 800 with the configuration below. When additional components are incorporated, the power consumption in energy saving mode may exceed the requirements for the environment symbol ("Blue Angel") (30 W).

Processor (512 Kbyte cache):	Pentium II MMX at 450 MHz
Main memory:	192 Mbytes
Floppy disk drive:	1.44 Mbytes
Hard disk drive:	6.4 Gbyte
CD-ROM drive:	32fold
Graphics:	Matrox MGA G100 AGP
LAN:	10/100 MBit Ethernet Controller onboard

Index

2
2nd serial port
    installation opening 43

A
Accessible drive
    installing 34
    removing 36
Accumulator, disposal 4
Activating, security measures 23
Alphanumeric keypad 20
Alt Gr key 21
Anti-theft protection 24
Assembling, PC 31
Audio input 11
Audio output 11

B
Battery 44, 45
    disposal 4
BIOS Setup 23
    security functions 24
Board 4
    installing 31
    removing 31

C
Cable
    connecting 10
    disconnecting 10
Cabling, PC 10
Calculator keypad 20
Casing
    assembling 31
    opening 30
Casing lock 15
CD-ROM drive
    indicator 19
    installing 34
    manual 28
    removing 36
CE certificate 5
Changing
    floppy disk drive 37
    hard disk drive 38
    lithium battery 44, 45
Checking, rated voltage 14
Chipcard reader 11

indicator 19
Installing/removing 41
Class B Compliance Statement 5
Cleaning 8
Clearance 47
Closing, system unit 31
Configuration, BIOS-Setup 23
Connecting
cables 10
devices 10
keyboard 12
monitor 13
mouse 12
parallel port 12
power voltage 14
serial port 12
Connecting to power voltage 14
Contents of delivery 9
Control key 21
Courier 1
Ctrl key 21
Ctrl+Alt+Del 21
Cursor control keys 20

D
Dark screen 26
Data protection 23
Data, technical 47
Date, not correct 27
Devices
connecting 10
interface 11
Dimensions 47
Diskette 22
cannot be read or written 27
write-protection 22
Disposal 4
Drive 34
Drive cover 15

E
Electrical data 47
Electromagnetic compatibility 5
Energy saving 4
Enter key 21
Environmental conditions 47
Environmental data 47
Ergonomic, video workstation 10
Error
date 27
floppy 27
mouse 27
screen 26
system unit 25

time 27
Error message 27
ESD 4
Euro key 21
Expansion 29
External devices
connecting 10
ports 11

F
FCC statement 5
First time, switching on 17
Flashing power-on indicator 20
Floppy disk drive
changing 37
indicator 19
removing 36
Function keys 20

G
Game port 11
Green, power-on indicator 20
Guarantee coupon booklet 9

H
Hard disk drive
indicator 19
replacing 38

I
IDE drives 34
Important notes 3
Indicator
power-on indicator fails to light 25
remains blank 26
Indicators, system unit 19
Installation opening
2nd serial port 43
Installation, new Software 25
Installing
accessible drive 34
board 31
chipcard reader 41
hard disk carrier 40
hard disk drive 38, 39
ventilation duct 45
Insufficient memory 28
Interfaces 11
Italics 1

K
Kensington Lock 24
Key combination 21

Keyboard 20
    cleaning 8
    connecting 12
Keyboard port 11
Keys 21

L
LAN-port 11
Lead-sealing 24
Line in 11
Line out 11
Lithium battery 43
    replacing 44, 45
Lock 15
Locking, PC 15

M
Main memory 43
Main switch 16
Manuals, further 28
Manufacturer's notes 4
Memory, upgrading 43
Menu key 21
Message indicator 19
Microphone jack 11
Monitor
    cleaning 8
    connecting 13
    transporting 7
Monitor port 11
Mouse
    cleaning 8
    connecting 12
    error 27
Mouse port 11

N
New Installation, Software 25
No screen display 26
Not enough memory 28
Notational conventions 1
Note
    boards 4
    CE certificate 5
    disposal 4
    energy saving 4
    important 3
    manufacturer 4
    power cord selecction 6
    safety 3
Num Lock key 21
Numeric keypad 20

O
ON/OFF switch 16, 21
Opening
    system unit 30
Operation 9
Orange, power-on indicator 20
Other manuals 28
Overview
    PC 1
    preparing for use 9

P
Packing material 9
Parallel port 11
    connecting devices 12
PC
    cabling 10
    cannot boot 25
    cleaning 8
    closing 31
    connecting 10
    connecting to power voltage 14
    indicators 19
    locking 15
    opening 30
    ports 11
    setting up 10
    switching off 16, 18
    switching on 16, 18
    switching on for the first time 17
    transporting 7
    unlocking 15
Ports, external devices 11
Power cord selecction 6
Power management 28
Power-on indicator 16, 20
    dark 25
POWERSAV.SCR 4
Preparation for use 9
    overview 9
Problems 25
Processor 43
Property protection 23
PS/2 mouse port 11

Q
Quiet Boot 26

R
Rated voltage
    setting 14
Ready-to-operate 16
Recycling 4
Reinstallation of the hard disk 27

Reinstalling, hard disk contents 27
Removing
    accessible drive 36
    board 31
    chipcard reader 41
    hard disk carrier 38
    hard disk drive 39, 40
    ventilation duct 44
Replacing
    board 31
    hard disk drive 38
    lithium battery 44, 45
Return key 21

S
Safety 3
Screen
    blank 17, 18, 26
Screen blanking 4
SCSI drive 34
Security function 24
Security functions
    casing lock 23
    Chipcard 23
    MS-Windows 23
Security measures 23
Select, power cord 6
Serial interface 11
Serial port
    connecting devices 12
Setting
    rated voltage 14
Settings
    BIOS Setup 23
Setup, see BIOS Setup
Shift key 21
Soft Power Off 18
Software, New Installation 25
Start key 21
Streamer
    installing 34
    removing 36
Summer time 27
Surface 47
Switching off, PC 16, 18
Switching on, PC 16, 18
Symbols, explanation of 1
System board
    extensions 43
System expansion 29
System settings, BIOS Setup 23
System unit
    opening 30
System unit, see PC

T
Technical data 47
Time, not correct 27
Tips 25, 28
Transport 7
Trouble
    floppy 27
    mouse 27
    screen 26
    system unit 25
Troubleshooting 25

U
Unlocking, PC 15
Unpacking 9
Upgrading, memory 43
USB, Universal Serial Bus 11

V
Ventilation area 47
Ventilation duct
    installing 45
    removing 44
VESA (DPMS) 4
Video workstation 10

W
Warm boot 21
Winter time 27
Write protection, floppy 22

Contents

Introduction **1**
Notational conventions 1

Important notes **3**
Safety 3
Notes on installing and removing boards 3
Manufacturer's notes 4
Energy saving 4
Disposal and recycling 4
CE certificate 5
FCC Class B Compliance Statement 5
Power cord selection 6
Transporting the PC 7
Cleaning the PC 8

Preparation for use and operation **9**
Unpacking and checking the delivery 9
Preparing the PC for use 9
Setting up the PC 10
Connecting devices 10
Ports for external devices 11
Connecting the keyboard 12
Connecting the mouse 12
Connecting devices with serial or parallel port 12
Connecting the monitor to the line voltage 13
Connecting the PC to the line voltage 14
Unlocking/locking the system unit 15
Switching the PC on and off 16
Switching on the PC for the first time 17
Switching on the PC 18
Switching off the PC 18
Indicators on the system unit 19
Keyboard 20
Important keys and key combinations 21
Working with floppy disks 22
Settings in BIOS Setup 23
Property and data protection 23
Locking the system unit mechanically 23
Access authorization via chipcard 23
Security functions under Windows 23
Theft protection and lead sealing 24
BIOS Setup security functions 24

Troubleshooting and tips **25**
Installing new software 25
Power-on indicator remains dark after you have switched on your device 25
The screen stays blank 26
No mouse pointer displayed on the screen 27
The floppy disk cannot be read or written 27
Time and/or date is not correct 27
Error messages on the screen 27
Restoring the hard disk contents 27
Tips 28

System expansions **29**
Opening the system unit 30
Assembling the system unit 31
Installing and removing a board 31
Installing and removing drives 34
Installing an accessible drive 34
Removing an accessible drive 36
Changing the floppy disk drive 37
Installing or removing the hard disk drive 38
Installing a hard disk drive in the front bay 41
Installing/removing a chipcard reader 41
Installation opening for 2nd serial port 43
Extensions on the system board 43
Upgrading main memory 43
Replacing processor and lithium battery 44

Technical data **47**

Index **49**

A26361-K516-Z100-3-7619
SCENIC 800
Operating Manual
March 1999 edition

Microsoft, MS, MS-DOS, Windows and Windows NT are Trademarks of Microsoft Corporation.

VESA and DPMS are trademarks of Video Electronics Standards Association.

PS/2 is a registered trademark of International Business Machines, Inc.

Pentium is a registered trademark of Intel Corporation, USA.

All other trademarks referenced are trademarks or registered trademarks of their respective owners, whose protected rights are acknowledged.

Copyright © Siemens AG 1999

All rights, including rights of translation, reproduction by printing, copying or similar methods, even of parts are reserved.

Offenders will be liable for damages.

All rights, including rights created by patent grant or registration of a utility model or design, are reserved.

Delivery subject to availability. Right of technical modification reserved.