Introduction

This Operating Manual tells you how to put your PC into operation and how to operate it in daily use. It applies for all configuration levels. Depending on the configuration level chosen some of the hardware components described may not be available on your PC. Please observe the notes on your operating system.

Your SCENIC Edition Mi is a powerful PC which is suitable for both professional and private use.

You can incorporate operable drives (for example CD-ROM drive, DAT drive, streamer) as well as other boards.

Depending on the configuration level chosen, your PC is supplied with Windows 9x or Windows NT as the operating system.

Your PC has a number of security features to ensure that no unauthorized persons can access your data. For example, you can activate a screen saver with password protection. The security functions in the *BIOS Setup* also allow you to protect your data by means of passwords.

Further information on this PC is provided:

- in the manual „Safety and Ergonomics“
- in the Operating Manual for the monitor
- in the Technical Manual for the system board
- in the manual "BIOS Setup"
- in the documentation of your operating system
- in the information files (e. g. **.TXT, *.WRI, *.DOC, *.HLP*)

i Some of the manuals listed can be found on the CD "Drivers & Utilities" provided with your computer. These manuals can be read and printed with the Acrobat Reader contained on the CD.

Notational conventions

The meanings of the symbols and fonts used in this manual are as follows:

Pay particular attention to texts marked with this symbol. Failure to observe this warning endangers your life, destroys the system, or may lead to loss of data.

This symbol is followed by supplementary information, remarks and tips.

▶ Texts which follow this symbol describe activities that must be performed in the order shown.

Texts in italics indicate commands or menu item.

"Quotation marks" indicate names of chapters and terms that are being emphasized.

Important notes

In this chapter you will find information regarding safety which it is essential to take note of when working with your PC. The manufacturer's notes contain helpful information on your PC.

Safety

Pay attention to the information provided in the manual "Safety and Ergonomics".

- During installation and before operating the device, observe the instructions on environmental conditions in the chapter entitled "Technical data" as well as the instructions in the chapter "Preparation for use and operation".
- Please check whether the device is set to the local power supply (see chapter "Preparation for use and operation").
- The On/Off switch does not separate the system unit completely from the line voltage. To disconnect the line voltage completely, remove the power plug from the grounded power outlet.
- When cleaning the device, observe the relevant notes in the paragraph "Cleaning the PC".
- When connecting and disconnecting cables, observe the relevant notes in the chapter "Preparation for use and operation".
- Replace the lithium battery on the system board in accordance with the instructions in the chapter "System expansions - Memory, processor, lithium battery".
- Caution: components on the system board can get very hot.
- Keep this Operating Manual together with your device. If you pass on the device to third parties, you should also pass on this manual.

Notes on installing and removing boards

Boards with electrostatic sensitive devices (ESD) may be identified by labels.

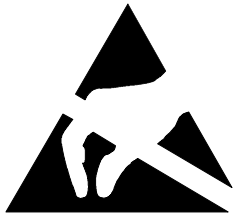

When you handle boards fitted with ESDs, you must observe the following points under all circumstances:

- You must always discharge yourself (e.g. by touching a grounded object) before working.
- The equipment and tools you use must be free of static charges.
- Pull out the power plug before inserting or pulling out boards containing ESDs.
- Always hold boards with ESDs by their edges.
- Never touch pins or conductors on boards fitted with ESDs.

Manufacturer's notes

Energy saving

When the PC is delivered, some energy-saving functions are already set (see Technical Manual for the system board or the manual "BIOS Setup").

- If you are not using your PC, switch it off.
- In the *BIOS Setup* you may set further energy-saving functions for the PC (see the Technical Manual of the system board or in the manual "BIOS Setup").

Energy saving under Windows NT

If the attached monitor and screen controller support power management in accordance with VESA (DPMS), a screen saver can be used to switch the monitor into power management mode. This function is dependent on the screen controller and screen driver used.

Energy saving under Windows 9x

Using the *DeskLock* program you can lock the mouse and keyboard so that no input can be made. If the attached monitor supports power management in accordance with VESA (DPMS), it can be switched into power-saving mode at the same time.

In addition the *Screen Saver* tab allows you to set energy-saving functions for your screen. Select the following item in the *Start* menu: *Settings - Control Panel - Display - Display Properties - Screen Saver - Energy saving features of monitor*.

With the default setting *Control Panel - Power - Advanced* additional energy saving features of Windows 9x are available.

Disposal and recycling

This device has been manufactured to the greatest possible degree from materials which can be recycled or disposed of in a manner that is not environmentally damaging. The device is taken back after use, so that it can be recycled, provided that it is returned in a condition which is the result of normal use. Any components not recuperated will be disposed of in an environmentally acceptable manner.

For devices marked with this symbol Siemens AG offers a guarantee for **36 months** with a **Bring-in-Service**. The guarantee starts on the day of delivery (sale date) by Siemens or a Siemens partner.

We herewith declare that it will be possible to repair any device marked with the eco-label for at least 5 years after production of that device has discontinued.

Information on power management and energy saving mode can be found in chapter "Technical data".

Do not throw lithium batteries or accumulators into the trashcan. They must be disposed of in accordance with local regulations concerning special waste.

If you have any questions on disposal, please contact your local office, our service department, or, directly:

Siemens AG
Recycling Center
D-33094 Paderborn

Tel.: 49 5251 818 010
Fax: 49 5251 818 015

CE certificate

The shipped version of this device complies with the requirements of the EEC directives 89/336/EEC "Electromagnetic compatibility" and 73/23/EEC "Low voltage directive".

FCC Class B Compliance Statement

If there is an FCC statement on the device, then:
The following statement applies to the products covered in this manual, unless otherwise specified herein. The statement for other products will appear in the accompanying documentation.

NOTE:

This equipment has been tested and found to comply with the limits for a "Class B" digital device, pursuant to Part 15 of the FCC rules and meets all requirements of the Canadian Interference-Causing Equipment Regulations. These limits are designed to provide reasonable protection against harmful interference in a residential installation. This equipment generates, uses and can radiate radio frequency energy and, if not installed and used in strict accordance with the instructions, may cause harmful interference to radio communications. However, there is no guarantee that interference will not occur in a particular installation. If this equipment does cause harmful interference to radio or television reception, which can be determined by turning the equipment off and on, the user is encouraged to try to correct the interference by one or more of the following measures:

- Reorient or relocate the receiving antenna.
- Increase the separation between equipment and the receiver.
- Connect the equipment into an outlet on a circuit different from that to which the receiver is connected.
- Consult the dealer or an experienced radio/TV technician for help.

Siemens AG is not responsible for any radio or television interference caused by unauthorized modifications of this equipment or the substitution or attachment of connecting cables and equipment other than those specified by Siemens AG. The correction of interferences caused by such unauthorized modification, substitution or attachment will be the responsibility of the user.

The use of shielded I/O cables is required when connecting this equipment to any and all optional peripheral or host devices. Failure to do so may violate FCC rules.

Power cord selection

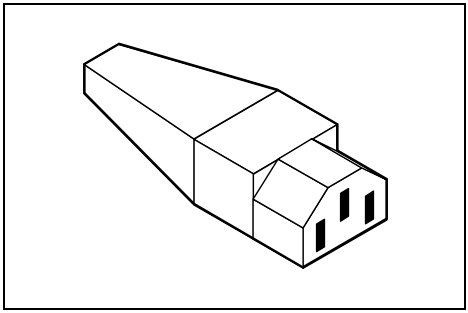

The power cord for this unit has been packed separately and has been selected according to the country of destination. It must be used to prevent electric shock. Use the following guidelines if it is necessary to replace the original cord set.

The female receptacle of the cord set must meet CEE-22 requirements (see Figure).

For the United States and Canada

Use a UL listed and CSA labeled cord set consisting of a three conductor cord with a maximum length of 15 feet.

For units which stand on a desk or table, type SVT or SJT cord sets shall be used.

For units which stand on floor, only SJT type cord sets shall be used.

The cord set must be selected according to the current rating for your unit. Please consult Table A for the selection criteria for power cords used in the United States and Canada.

Table A:

Cord Type	Size of Conductors in Cord	Maximum Current Rating of Unit
SJT	18 AWG 16 AWG 14 AWG	10 Amps 12 Amps 12 Amps
SVT	18 AWG 17 AWG	10 Amps 12 Amps

For units set at 115 V:

use a parallel blade, grounding type attachment plug rated 15 A, 125 V.

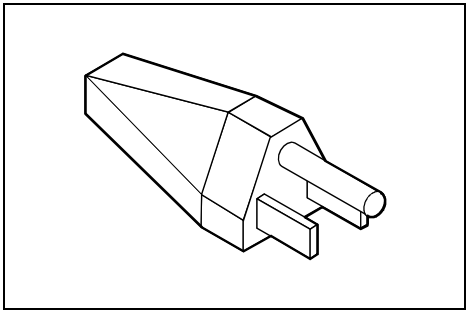

For units set at 230 V (domestic use):

use a tandem blade, grounding type attachment plug rated 15 A, 250 V.

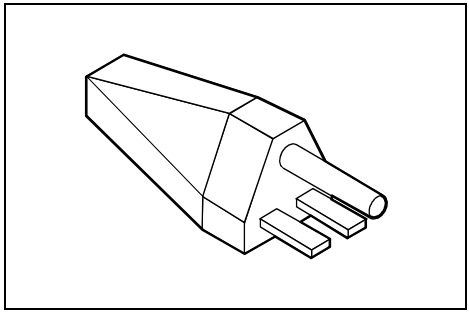

For units set at 230 V (outside of the United States and Canada):

use a cord set consisting of a minimum AWG according to Table A and a grounding type attachment plug rated 15 A, 250 V. The cord set should have the appropriate safety approvals for the country in which the equipment will be installed and should be marked HAR.

For the United Kingdom

Should the plug on the flexible cord not be of the type for your socket outlets, do not use an adapter but remove the plug from the cord and discard. Carefully prepare the end of the supply cord and fit a suitable plug.

WARNING

THIS APPLIANCE MUST BE EARTHED

IMPORTANT

The wires in this mains lead are colored in accordance with the following code:

Green and Yellow:	Earth
Blue:	Neutral
Brown:	Live

As the colors of the wires in the mains lead of this appliance may not correspond with the colored markings identifying the terminals in your plug, proceed as follows:

- The wire which is colored Green and Yellow must be connected to the terminal in the plug which is marked with the letter E or by the earth symbol or colored Green or Green and Yellow.
- The wire which is colored Blue must be connected to the terminal which is marked with the letter N or colored Black.
- The wire which is colored Brown must be connected to the terminal which is marked with the letter L or colored Red.

Transporting the PC

Transport all parts separately, and in their original packaging or in a packaging which protects them from knocks and jolts, to the new site. Do not unpack them until all transport maneuvers are completed.

Never drop the monitor (danger of implosion)!

Cleaning the PC

Turn off all power and equipment switches and pull the power plug out of the grounded power outlets.

Do not clean any interior parts yourself, leave this job to a service technician.

Do not use any cleaning agents that contain abrasives or may corrode plastic.

Ensure that no liquid enters the system.

Ensure that the ventilation areas of the system unit and the monitor are free.

Cleaning the system unit and the monitor

Wipe the system unit and monitor casing with a dry cloth. If particularly dirty, use a cloth which has been moistened in mild domestic detergent and then carefully wrung out.

Cleaning the keyboard and the mouse

Use a cloth for disinfection to clean the keyboard and the mouse.

Remove the retaining ring on the underside of the mouse and then clean the mouse mechanism and the rotating ball.

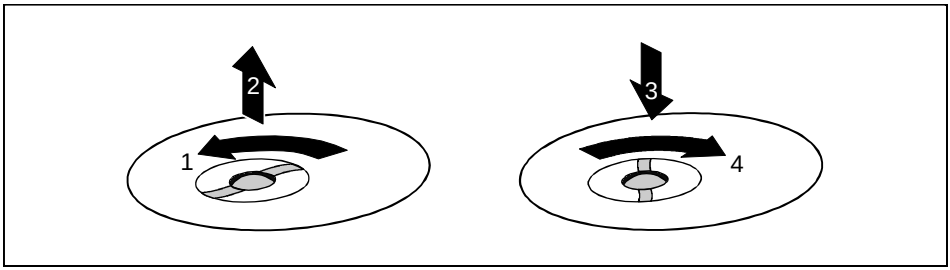

- Using both thumbs exert downward pressure on the notches of the retaining ring and turn the ring anticlockwise (1).
- Remove the retaining ring and the rotating ball from the mouse (2).
- Clean the three small wheels in the mouse and the ball with a lint-free cloth.
- Replace the ball and the retaining ring (3).
- Using both thumbs exert downward pressure on the notches of the retaining ring (4) and turn the ring clockwise. You must feel the ring engage.

Preparation for use and operation

Please take note of the safety information in the chapter "Important notes".

Unpacking and checking the delivery

It is recommended not to throw away the original packaging material! It may be required for reshipment at some later date.

- Unpack all the individual parts.
- Check the delivery for damage incurred during transport.
- Check whether the delivery agrees with the details in the delivery note.
- Check whether all necessary details have been entered on the first page of the guarantee coupon booklet.

Should you discover that the delivery does not correspond to the delivery note, notify your local sales office immediately.

If you have received drives or boards with your PC, please do not install them until after first-time setup. How to install drives and boards is described in the chapter "System expansions".

Preparing the PC for use

First-time setup includes the connection of the devices (monitor, mouse, keyboard etc.) and the setup of the supplied software.

When you set up the PC for the first time, you should carry out the following steps in the order shown:

1. Decide where you are going to use the PC.
2. Connect the external devices to the system unit.
3. Check the rated voltage of the system unit and connect it to the line voltage.
4. Switch the PC on and follow the instructions on the screen.

Setting up the PC

When installing your PC, give consideration to the recommendations on video workstation ergonomics in the manual "Safety and Ergonomics".

Set up the PC only in its correct orientation. The points to observe are illustrated on the following pages.

We recommend that you place your equipment on a surface with good anti-slip qualities. In view of the multitude of different finishes and varnishes used on furniture, it is possible that the rubber feet of the devices will mark the surface they stand on.

Do not expose the PC to extreme environmental conditions (see chapter "Technical data"). Protect it from dust, humidity and heat.

Provide at least 200 mm of clearance on the left, in front of and behind the ventilator area of the system unit to ensure adequate ventilation. Do not cover the ventilation areas of the monitor and the fan.

Do not place several system units one above the other.

Connecting devices

The power plug must be disconnected!

Read the documentation on the external device before connecting it.

Do not connect or disconnect cables during a thunderstorm.

Always take hold of the actual plug body. Never unplug a cable by pulling the cable itself!

Connect and disconnect the cables in the order described below.

Connecting cables

- Turn off all power and equipment switches.
- Unplug all power plugs from the grounded power outlets.
- Connect all cables at the system unit and peripherals. You must observe the information provided in the chapter "Important notes".
- Plug all data communication cables into the utility sockets.
- Plug all power cables into the grounded power outlets.

Disconnecting cables

- Turn off all power and equipment switches.
- Unplug all power plugs from the grounded power outlets.
- Unplug all data communication cables from the utility sockets.
- Disconnect all cables from the system unit and peripherals.

Ports for external devices

The ports for external devices are on the rear of the system unit. The ports available on your PC depend on the configuration level you have selected. The standard ports are marked with symbols like those below or similar symbols. Exact details of the position of the ports are supplied in the Technical Manuals for the boards.

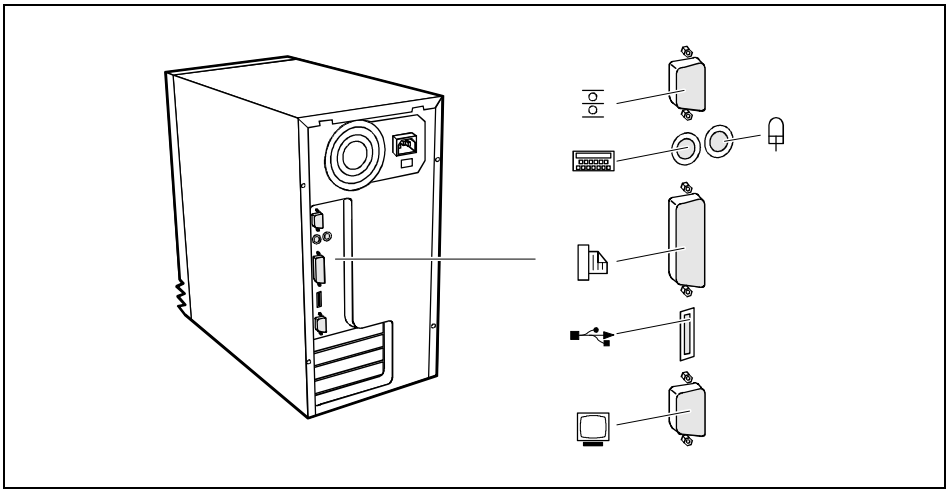

Example for the location of connections

Keyboard port

PS/2 mouse port

Video connector

USB - Universal Serial Bus

Audio output (Line out)

Audio input (Line in)

Serial port 1

Serial port 2

Parallel port

Game port

Microphone jack

LAN
LAN-port

Some of the devices that you connect require special drivers (see the documentation for the connected device and for the operating system).

Connecting the mouse

- Plug the connector of the mouse cable into the mouse port.

i

If you attach a serial mouse, you can disable the mouse controller in the *BIOS-Setup* in order to free the IRQ12 for a different application. If the mouse controller is disabled, you will not be able to operate a mouse connected to the PS/2 mouse port.

Connecting the keyboard

i

Use only the keyboard cable supplied.

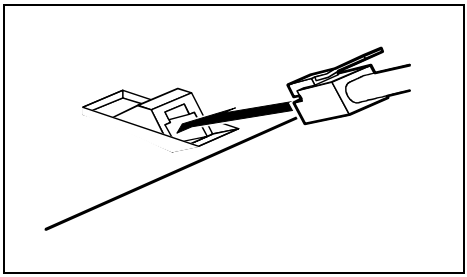

- Plug the round plug of the keyboard cable into the keyboard port on the system unit.
- Plug the other connector of the keyboard cable into the socket on the underside of the keyboard.

Connecting devices with serial or parallel port

- Connect the data cable to the external device.
- Connect the data cable of the external device to the appropriate port on the system unit.

i

Most devices that you connect to the serial or parallel port require special drivers. Your operating system already includes many drivers . But if the driver you need is not on the hard disk please install it from the floppy disk supplied with the device or with the application program.

If you need to change the default settings of the serial or parallel port (e.g. address, interrupt), you can do so in the *BIOS Setup*. The default setting for the interfaces are described in the Technical Manual for the system board or in the "BIOS Setup" manual.

Connecting the monitor to the line voltage

- Prepare the monitor as described in the Operating Manual for the monitor.
- Plug the data cable of the monitor into the monitor port of the system unit.
- Plug the power cable of the monitor into the grounded power outlet (2).

Connecting the PC to the line voltage

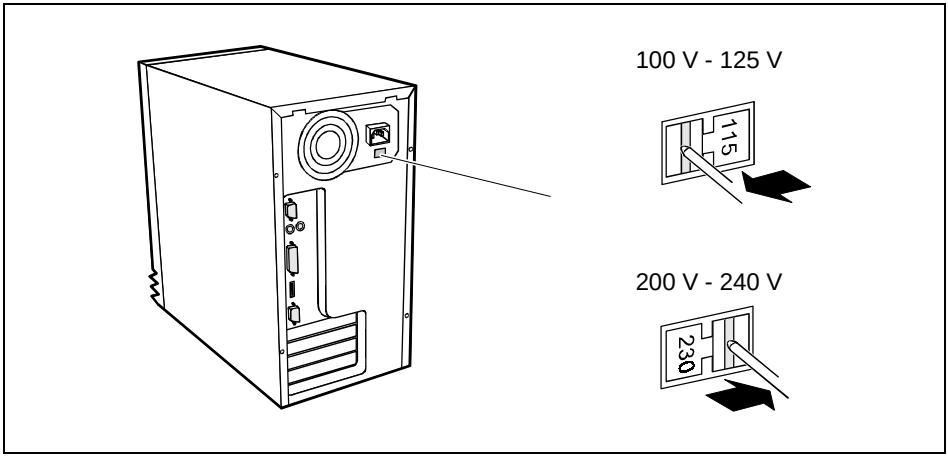

► Check the rated voltage.

115 = 100 V to 125 V 230 = 200 V to 240 V

If the rated voltage does not agree with the local line voltage, you must move the wiper switch to the correct position.

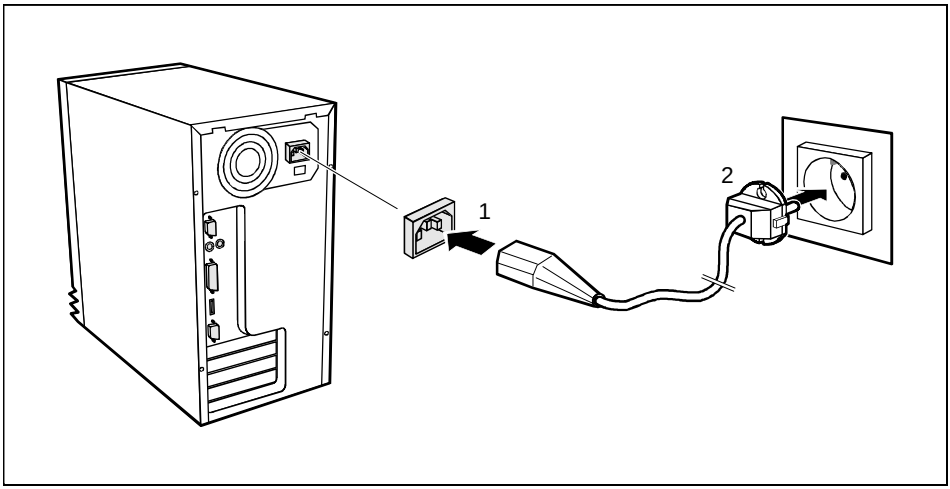

► Plug the system unit's power cable into the system unit (1) and then into the grounded power outlet (2).

Indicators and switches

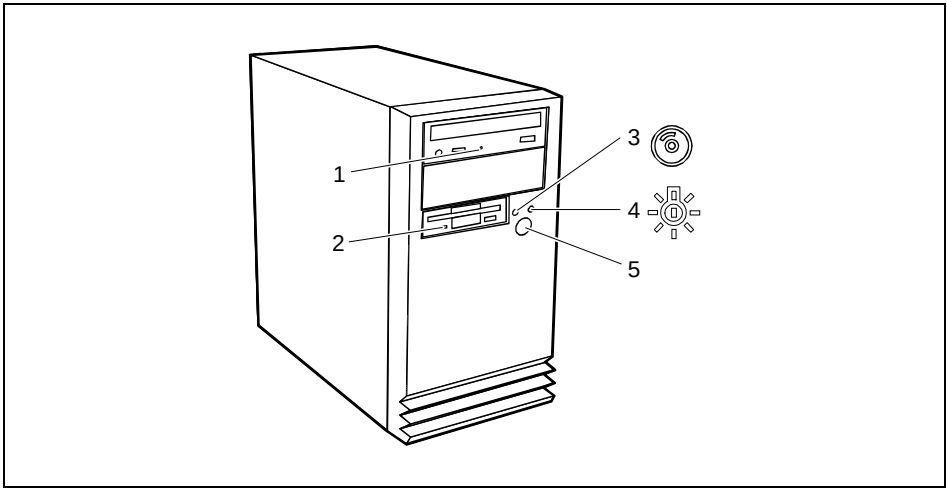

1 = CD-ROM indicator
2 = Floppy disk indicator
3 = Hard disk indicator
4 = Power-on indicator
5 = ON/OFF switch

1 - CD-ROM indicator

The indicator lights up when the CD-ROM drive of the system unit is accessed. You may only remove the CD when the indicator is dark.

2 - Floppy disk indicator

The indicator lights up when the floppy disk drive of the system unit is accessed. You may only remove the floppy disk when the indicator is dark.

3 - Hard disk indicator

The indicator lights up when the hard disk drive of the system unit is accessed.

4 - Power-on indicator

The indicator lights up green when the system unit is switched on.

The indicator lights up orange when the system unit is switched off.

5 - ON/OFF switch

Switches the PC on or off.

Switching on the PC for the first time

When you switch on your PC for the first time the supplied software is set up and configured.

- ▶ Switch your monitor on.
- ▶ Switch the system unit on with the ON/OFF switch.

The power-on indicator lights green and the PC is started.

- ▶ Adjust the brightness if necessary (see the Operating Manual for the monitor).

Some variants require you to start the software installation by pressing the function key F1.

Once the installation has been started the PC must not be switched off.

You should only reboot the PC during installation if you are requested to do so. Otherwise the installation will be not be performed correctly. If a fault occurs in the installation the contents of the hard disk must be completely restored.

- ▶ During installation follow the instructions on the screen.

Consult the operating system manual if there is anything unclear about the requested input data.

If the PC is integrated into a network, the user and server details as well as the network protocol are required. Contact your network administrator if you have any questions about these details.

The license number for Windows is printed on the front cover of the Windows manual supplied.

Some system configurations do not include a Windows CD in the delivery package. In this case you should create a backup copy after installing Windows so that you can restore the hard disk contents in an emergency.

You need about 40 diskettes for this.

- ▶ Create Windows diskettes with the *MSCSD* backup program (create system diskettes) and label them using the labels supplied.

You will find further information about the system, drivers, utilities, updates, and manuals etc. on the "Drivers & Utilities" CD supplied.

Switching on the PC

If after switching on the PC you see nothing but flickering stripes on the screen, switch the PC off immediately (see "Troubleshooting and tips" - "Flickering or drifting stripes on the monitor screen").

- Switch the monitor on (see the Operating Manual for the monitor).
- Switch the system unit on with the ON/OFF switch.

The power-on indicator lights green and the PC is started.

If you have assigned the system password, you must enter this when requested to do so, in order to start the operating system.

Switching off the PC

- Shut down the operating system properly. Windows in the *Start* menu via the *Quit* function.
- If the operating system does not automatically switch the system unit off, turn the system unit off when requested to do so by pressing the On/Off switch. If the system unit is switched off, the power-on indicator lights up orange.

The On/Off switch does not separate the system unit from the line voltage. To disconnect the line voltage completely, remove the power plug from the grounded power outlet.

If the system unit is off, the system board consumes very little power.

Working with floppy disks

Follow the instructions supplied by the vendor of the floppy disks.
Never clean the floppy disk drives with cleaning disks. Even just one attempt would destroy the read/write head in the disk drive within 20 seconds.

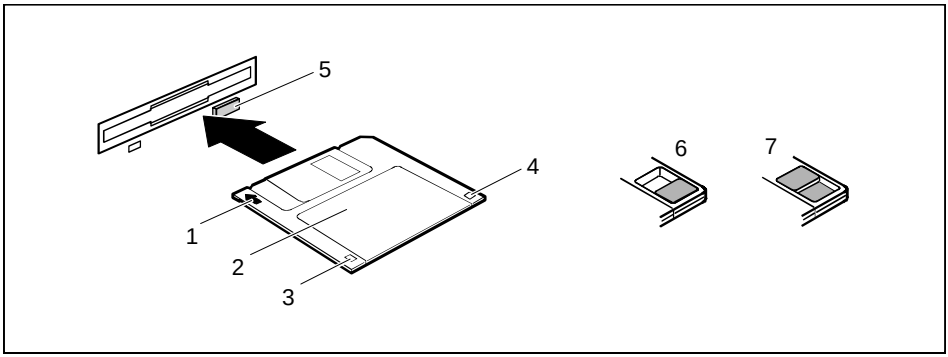

1 = Insertion direction
2 = Label area
3 = Write protection tab for a 720 Kbyte or a 1,44 Mbyte floppy disk
4 = Identification of a 1,44 Mbyte floppy disk or write protect tab on a 120 Mbyte floppy disk
5 = Eject button for inserted floppy disks
6 = Floppy disk is write protected
7 = Floppy disk is not write-protected

- ► To insert a floppy disk, push it into the drive in the insertion direction (1) until it engages. The label should be facing upward.
- ► To remove the floppy disk, press the eject button (5).

The write-protect slider enables you to protect the data on the floppy disk from inadvertent overwriting or deletion.

- ► To protect the data on the floppy disk from being overwritten, push the write-protect slider to position (6). The hole is now visible.
- ► To remove write protection, push the slider to position (7). The hole is now covered.

Keyboard

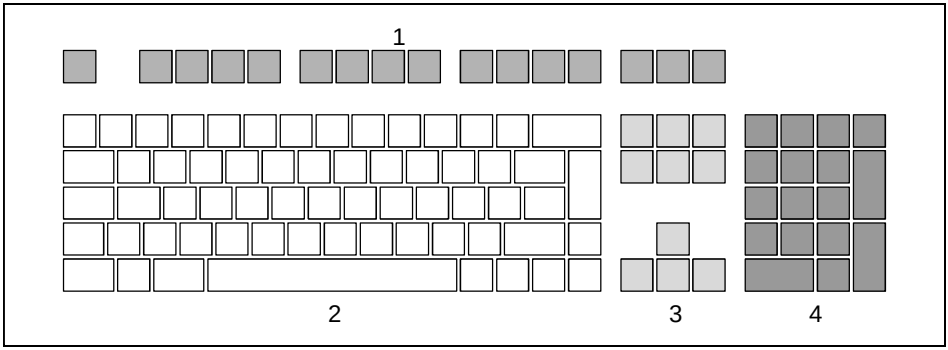

1 = function keys
2 = alphanumeric keypad
3 = cursor control keys
4 = numeric keypad (calculator keypad)

Important keys and key combinations

The following description of keys and key combinations refers to MS Windows. Details of other keys and key combinations can be found in the documentation of the relevant application program.

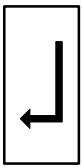

Enter key
confirms or starts the marked selection. The enter key is also referred to as the "Return" key or "Carriage Return".

Start key
invokes the *START* menu.

Menu key
invokes the menu for the marked item.

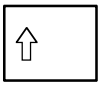

Shift key
enables upper-case letters and the upper key symbols to be displayed.

Alt Gr
produces a character shown on the right-hand side of a key (e. g. the character "****" on the key [ß]).

Euro key
produces the Euro character (Windows 98 and Windows NT5.0).

Num ⇩

Num Lock key
by pressing the Num Lock key you switch between the upper- and lower-case levels of the calculator keypad.
At upper-case level (Num Lock indicator lit) the digit and comma keys are active.
At lower-case level (Num Lock indicator not lit) the cursor control functions are active in the calculator keypad.

Ctrl

Ctrl key
starts key combination actions.

Ctrl + Alt + Del

Warm boot
restarts your PC. First hold down the Ctrl and Alt key, and then press the Del key.

Settings in BIOS Setup

The *BIOS Setup* menu allows you to set your hardware configuration and system functions. When the notebook is delivered, the default entries are valid. You can customize these settings to your requirements in *BIOS Setup*.

The Technical Manual for the system board shows you how to call and operate *BIOS Setup*. The menus and setting options provided by *BIOS-Setup* are also described in detail.

Property and data protection

Your PC enable you to protect your system and personal data in a number of ways against unauthorized access.

Security functions under Windows 9x

Under Windows 9x you can activate a screen saver and protect it with a password. Only those users who know the password can deactivate the screen saver and access any open files. Detailed information on screen savers under MS Windows is provided by the associated help function.

BIOS Setup security functions

The *Security* menu in *BIOS Setup* offers you various options for protecting your system and personal data against unauthorized access. By combining these options, you can achieve optimum protection for your system. You will find a detailed description of the *Security* menus and how to assign passwords in the Technical Manual for the system board.

Troubleshooting and tips

Take note of the safety hints in the manual "Safety and Ergonomics" and in the chapter "Preparation for use and operation", when you connect or disconnect cables.

If a fault occurs, try to correct it as described:

- in this chapter
- in the documentation of the connected devices
- in the help systems of the software used.

If you fail to correct the problem, proceed as follows:

- ▶ Switch the PC off.
- ▶ Make a note of the steps and the circumstances that led to the fault. Also make a note of any error messages displayed and the Ident-No. (Identnr.) of the type label of your device.
- ▶ Contact your sales office or customer service.

Installing new software

When installing programs or drivers, important files may be overwritten and modified. To be able to access the original data in the case of any problems following installation, you should make a backup of the your hard disk prior to installation.

Power-on indicator remains dark after you have switched on your device

This may have the following causes:

The line voltage supply is faulty

- ▶ Check that the power cable is plugged properly into the system unit and grounded power outlet.

Internal power supply overloaded

- ▶ Disconnect the power plug of the system unit from the grounded power outlet.
- ▶ Plug the power plug into the grounded power outlet again.

The screen stays blank

If your screen remains blank this may have the following causes:

Monitor is switched off

- ► Switch your monitor on.

Screen has been blanked

- ► Press any key on the keyboard.

or

- ► Deactivate screen blanking (screen saver). Enter the appropriate password.

Brightness control is set to dark

- ► Set the brightness control to light. For detailed information, please refer to the Operating Manual supplied with your monitor.

Power cable or monitor cable not connected

- ► Switch off the monitor and the system unit.
- ► Check that the power cable is properly connected to the monitor and system unit or to the grounded power outlet.
- ► Check that the monitor cable is properly connected to the system unit or monitor (if not permanently attached).
- ► Switch on the monitor and the system unit.

Wrong monitor has been set under Windows NT

- ► Restart the PC in standard VGA mode.
- ► Set the desired resolution in the *Control Panel* window using the *Display* program, and adjust the monitor display as described in the Operating Manual.

Wrong monitor has been set under Windows 9x

- ► Restart the PC.
- ► If the message *Starting Windows 9x* appears, press function key [F8].

The Windows 9x start menu appears.

- ► Select the option *Safe mode* or *Safe mode with network support*.
- ► Set the correct values for the attached monitor by selecting *Start* - *Settings* - *Control Panel* - *Display* - *Settings*.

The wrong RAM memory modules have been inserted

- ► See the Technical Manual for the system board for information on which memory modules can be used.

Flickering or drifting stripes on the monitor screen

Switch off the PC immediately!

The flickering stripes are caused either by an old-type screen that does not support the horizontal frequency of 47 kHz, or by an incorrect monitor selection under MS-Windows.

The drifting screen display is caused when the selected frequency and/or resolution is wrong.

The default screen values are 800x600 pixels at 75 Hz and for 64K colors.

- Find out which horizontal frequency your monitor screen supports.
  You will find the horizontal frequency (also known as line frequency or horizontal deflection frequency) in the documentation of your monitor.

No mouse pointer displayed on the screen

- Shut down the operating system properly.
- Switch the PC off.
- Check that the mouse cable is properly connected to the system unit.
  If you use an adapter or extension lead with the mouse cable, check the connector.
- Make sure that only one mouse is connected.
- Switch the PC on.
- The mouse controller must be enabled, if you use a PS/2 mouse. Check in the *BIOS Setup* that the mouse controller is enabled.
- Check that the mouse driver is properly installed and is present when the application program is started. Detailed information can be found in the User Guide of the mouse or application program.

The floppy disk cannot be read or written

- Check that the write protection of the floppy disk or the floppy disk drive is activated (refer also to the Technical Manual of the system board or in the manual BIOS).
- Check the relevant entries for *Diskette A:* or *B:* in the *Main* menu of the *BIOS Setup*.
- Check that the floppy disk drive controller is enabled (refer also to the Technical Manual of the system board or in the manual "BIOS Setup").
- Check that the cables of the floppy disk drive are properly connected (refer to chapter "System expansions").

Time and/or date is not correct

- Set the time and/or date. You can set the time and date in the *BIOS Setup* or in the operating system.

> **i** If the time and date are repeatedly wrong when you switch on your PC, the battery is flat. Change the lithium battery as described in the Chapter "Memory, processor, lithium battery".

Error messages on the screen

Error messages and their descriptions are listed in the Technical Manual of the system board or in the "BIOS Setup" manual and in the documentation of the installed software.

Restoring the hard disk contents

Your PC is supplied with different software components. These software components are usually already preinstalled on the hard disk and is either ready for use immediately after initial startup or initialized for setup or installation.

If your hard disk is however damaged, or programs or parts thereof have been accidentally deleted, then recovery of the relevant programs or the entire contents of the hard disk is necessary.

The PC can be put into operation again with the backup diskettes, the Windows CD provided, the drivers provided on floppy disks or CD and the CD with the applications program.

> **i** All data on the hard disk will be deleted. Operating system, drivers and software utilities will be reinstalled. For this reason you should try to save important data before you restore the hard disk contents.

Restoring hard disk contents with a Windows CD

- Proceed as described in the related documentation.

Restoring the hard disk contents using the backup diskettes

- Insert the first backup disk and follow the instructions on the screen.
- Install the drivers and utilities in the *C:\PROGS\DISKS* directory.

Restoring the hard disk contents under Windows NT

If you need to restore the hard disk contents you have to reinstall Windows NT.

- Proceed as described in the related documentation.

Tips

The PC cannot be switched off with the ON/OFF switch

Cause: The PC has not been switched on with the ON/OFF switch.

- Press the ON/OFF switch again.

Cause: System crash

- Press the ON/OFF switch for at least four seconds, until the device switches off.

Out of system resources

If you have too many applications running at once, you may experience problems due to a lack of system resources. If this happens, you should close applications you do not require or call the applications in a different order.

BIOS settings in power management do not become active

The *Auto insert notification* setting may be active for the CD-ROM drive. This setting causes Windows 9x to inquire about any modifications on the drive at regular intervals. Because of this the timer for the idle time cannot time out.

To activate power management, proceed as follows:

- In Windows 9x, select *Start* - *Settings* - *Control Panel* - *System* - *Device Manager* - *CD-ROM*.
- Select the installed CD-ROM drive from the list.
- Select *Settings*.
- Deactivate the *Auto insert notification* box.

CD-ROM drive

Information on the CD-ROM drive can be found in the manual of the CDROM drive or on the "Drivers & Utilities" CD.

Other manuals

Other manuals are contained on the "Drivers & Utilities" CD.

System expansions

It may be necessary to update the BIOS when carrying out a system expansion or hardware upgrade. In this instance, please contact our service.

This chapter describes all the activities required to modify your PC hardware (e.g. installing boards or drives).

Memory and processor upgrading are described in the Technical Manual for the system board.

Read the supplied documentation before installing new drives and/or boards.

Refer to the Technical Manual for the system board before making any extensions on the system board.

Opening the system unit

Please take note of the safety information in the chapter "Important notes".

Pull the power plug out of the power outlet!

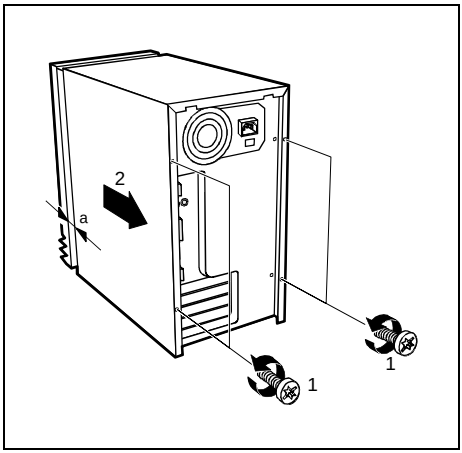

- ► If any cables attached to the system unit are obstructing you, pull out the connectors on the system unit.
- ► Place the system unit in a convenient working position.
- ► Loosen the screws (1).
- ► Pull the casing in the direction of the arrow (2) until the distance (a) is approximately 10 mm.
- ► Lift the casing in an upward direction.

Assembling the system unit

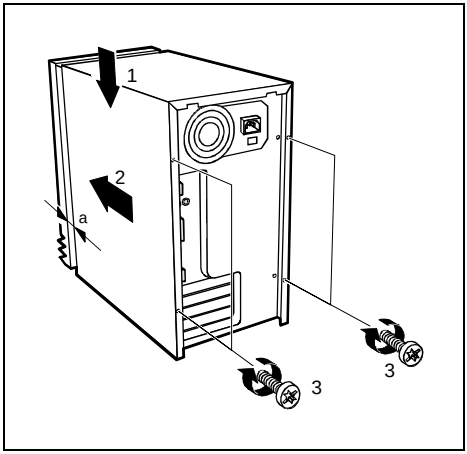

- ► Place the housing on the system unit (1) from above so that the distance (a) is approx. 10 mm. While doing so, make sure that the housing is hooked into the system unit at the bottom.
- ► Push the casing in the direction of the arrow (2).
- ► Fasten the screws (3).
- ► Return the system unit to its original position.
- ► If you have disconnected cables, reconnect them at the rear.

Installing and removing drives

The system unit houses a total of three accessible drives (two 5 1/4-inch drives and one 3 1/2-inch drive) and one non-accessible half-height (Slimline) drive.

IDE drives

By default four IDE drives are supported. Ideally hard disks are connected to IDE port 1, and accessible drives, for example CD-ROMs, to IDE port 2 (see also the Technical Manual for the system board).

SCSI drives

If you want to install an SCSI drive, you require an SCSI controller and an SCSI cable. Note that:

- not every SCSI controller is suitable for operating SCSI hard disks
- each SCSI device must be assigned its own SCSI-ID
- a device with activated or connected terminating resistors must always be connected at the end of an SCSI cable. The terminating resistors of all other SCSI devices attached must not be activated or connected.

Installing an accessible drive

- Open the system unit (see "Opening the system unit").

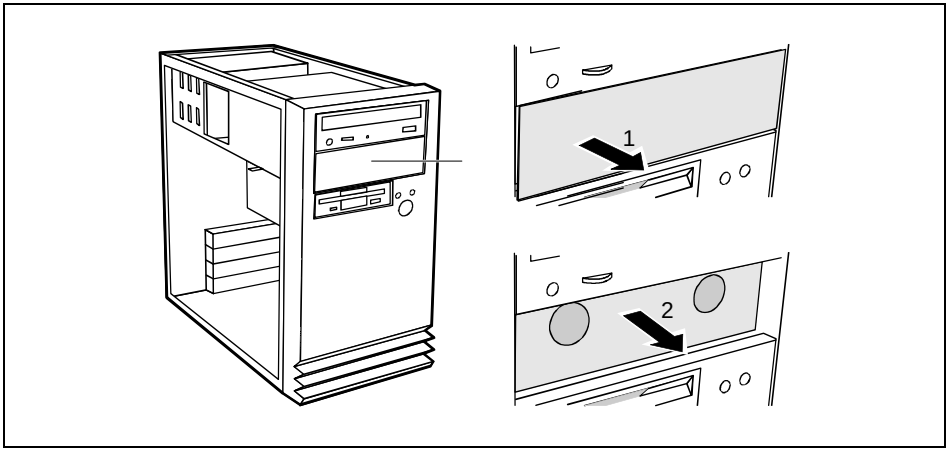

- Lever out the plastic drive cover off the casing (1).
- Pull the metal cover forward (2).

If you remove the drive again later, you will have to reinstall the covers.

- Make the required settings on the drive (if necessary, on installed drives as well).

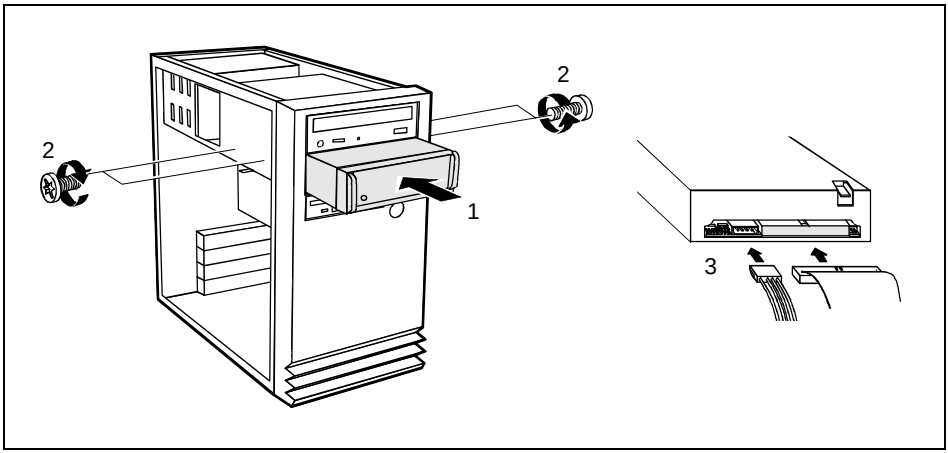

- Slide the drive into the system unit (1).
- Fasten the drive with the screws (2).
- Plug the connectors of the data cable and the power supply cable into the drive (3).

- Close the system unit (see "Assembling the system unit").

If necessary, you must adapt the entry for the drive in the *Setup* menu.

Replacing the hard disk or floppy disk drive

- Open the system unit (see "Opening the system unit").

Removing the drive carrier

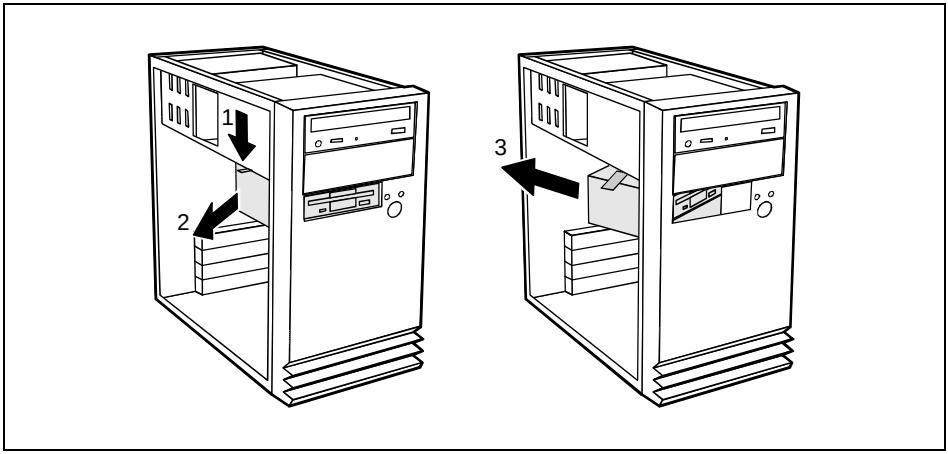

- Press the unlocking device in the direction of the arrow (1).
- Swivel the drive carrier in direction of the arrow (2).
- Remove the drive carrier in direction of the arrow (3).

Replacing a hard disk drive

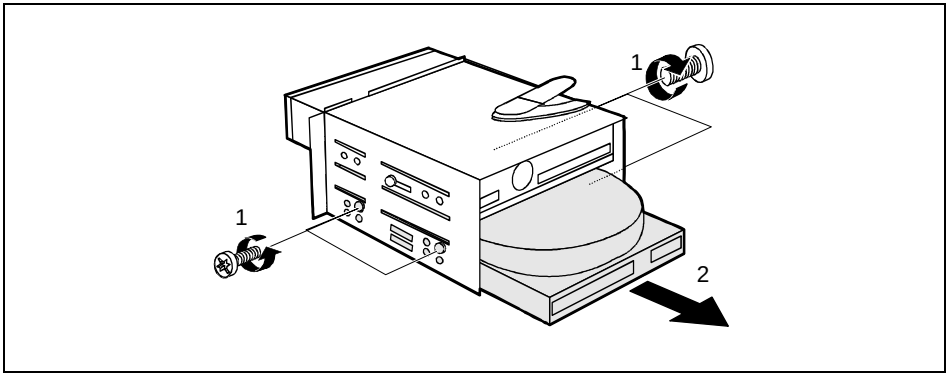

- ▶ Remove the four screws (1).
- ▶ Pull the hard disk drive out of the carrier (2).
- ▶ Take the new hard disk drive out of its packaging.
- ▶ Make the required settings (e.g. master-slave settings) on the drive.

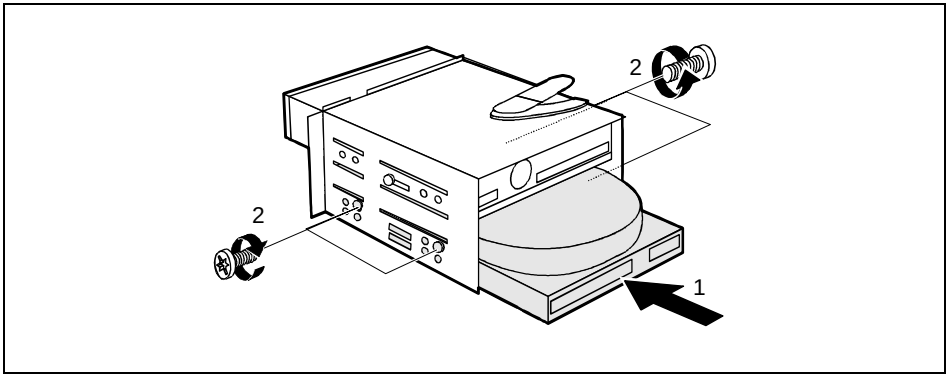

- ▶ Slide the hard disk drive into the drive carrier (1).
- ▶ Fasten the hard disk drive with the screws (2).
- ▶ Plug the data and the power supply connectors into the hard disk drive.
- ▶ Close the system unit (see "Assembling the system unit").

i If necessary, you must adapt the entry for the drive in the *Setup* menu.

Changing the floppy disk drive

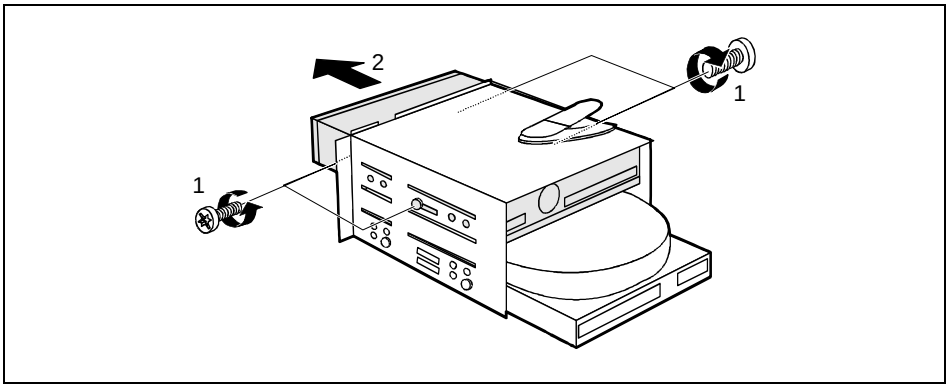

- ▶ Remove the four screws (1).
- ▶ Pull the floppy disk drive out of the carrier (2).
- ▶ Take the new floppy disk drive out of its packaging.

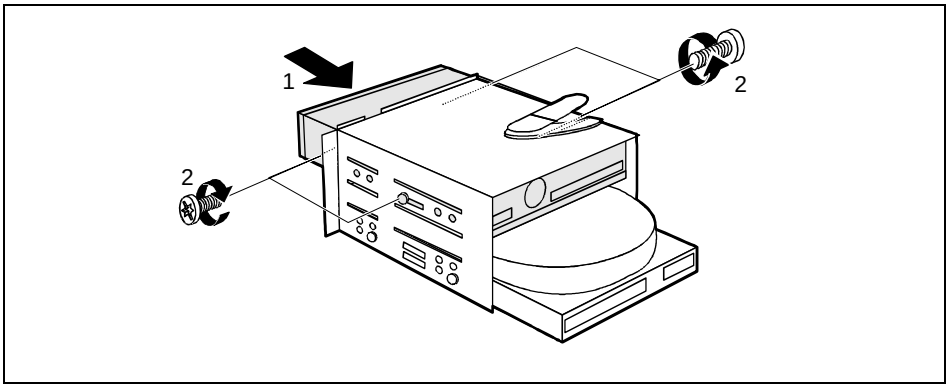

- ▶ Slide the floppy disk drive into the drive carrier (1).
- ▶ Fasten the hard disk drive with the screws (2).
- ▶ Plug the data and the power supply connectors into the hard disk drive.
- ▶ Close the system unit (see "Assembling the system unit").

i If necessary, you must adapt the entry for the drive in the *Setup* menu.

Installing the hard disk carrier

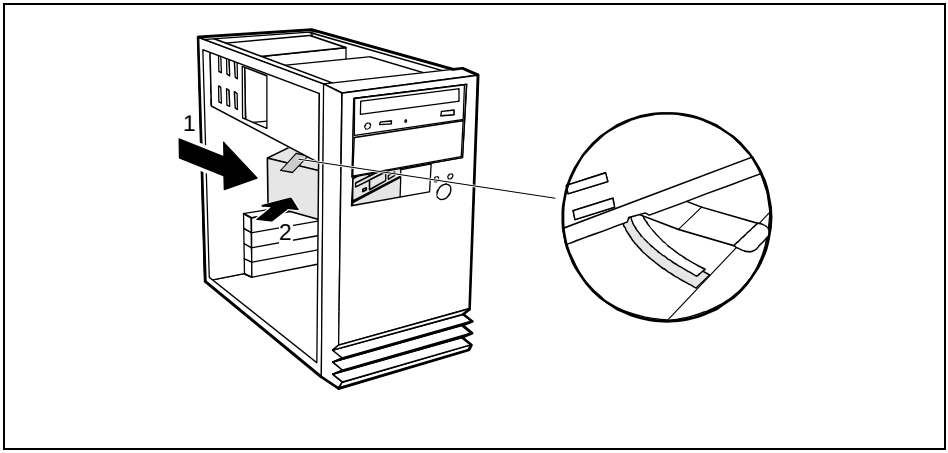

- Slide the drive carrier in direction of the arrow (1).
- Swivel the drive carrier in direction of the arrow (2). Please ensure that the guide rail is in the groove.
- Close the system unit (see "Assembling the system unit").

i

If necessary, you must adapt the entry for the drive in the *Setup* menu.

Installing a board

Observe the notes on installing and removing boards in the chapter "Important notes".

Old ISA boards which require a 5 V power supply are not supported.

You can install boards which are up to 300 mm long.

The number, position and arrangement of the board slots on system board can be found in the technical manual for the system board. Boards may be installed when the device is shipped.

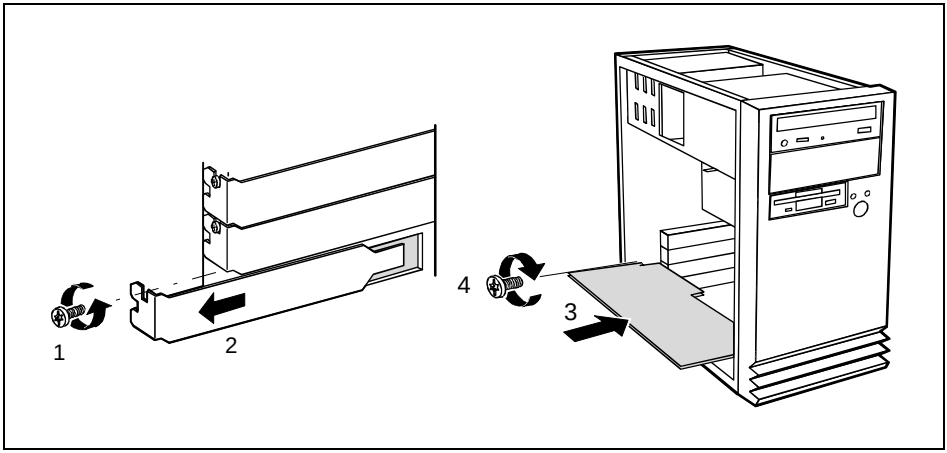

- Remove the screw (1).
- Remove the rear slot cover plate from the slot (2).

Do not dispose of the rear slot cover plate. For cooling, protection against fire and in order to comply with EMC regulations, you must refit the rear slot cover plate if you remove the board.

- Take the new board out of its packaging.
- Make the required settings for the board.

Put the board in the required slot and push it carefully in place (3). Ensure that the end of a long board without angle bracket fits into the corresponding guide of the system unit.

- Press the board into the slot so that it engages.
- Fix the board with the screw (4).
- If necessary, plug the lines on the board.

Settings in BIOS Setup

If you have installed or removed a PCI board, please check in the *BIOS Setup* the settings for the relevant PCI slot. If necessary, change the settings. Further information is provided in the documentation for the PCI board.

Memory, processor, lithium battery

Details of how and if you can upgrade the main memory or retrofit the second-level cache of your PC are provided in the Technical Manual for the system board. Below the necessary steps are described to enable you to work on the system board.

- Open the system unit (see "Opening the system unit").
- If a board is installed on the system board, you may have to remove it (see "Installing a board").
- Make desired extensions as it is described in the Technical Manual for the system board.
- If you have removed a board, install it now (see "Installing a board").
- Close the system unit (see "Assembling the system unit").

Replacing the lithium battery

Incorrect replacement of the lithium battery may lead to a risk of explosion.

The lithium battery may be replaced only with an identical battery or with a type recommended by the manufacturer.

Do not throw lithium batteries into the trashcan. It must be disposed of in accordance with local regulations concerning special waste.

Make sure that you insert the battery the right way round. The plus pole must be on the top!

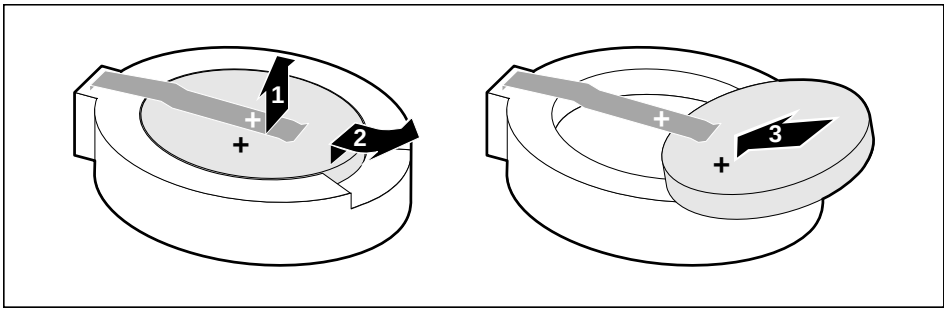

- Lift the contact (1) a few millimeters and remove the battery from its socket (2).
- Insert a new lithium battery of the same type in the socket (3).

Technical data

Electrical data

Regulations complied with:	EN 60950 / VDE 0805 UL 1950 CSA 22.2 No.950
Protection class:	I
Rated voltage range: (selectable)	100 V to 125 V / 200 V to 240 V
Frequency:	50 Hz - 60 Hz
Max. rated current:	100 V - 125 V / 2.0 A 200 V - 240 V / 1.2 A
Maximum power draw in operation:	< 40 W *)
Minimum power draw in operation:	< 30 W *)
reduced by Windows 9x *Power management advanced_*	
Power draw in energy saving mode:	< 25 W *)
Power draw in the 'ready' status:	< 3 W *)

Dimensions

Width/Depth/Height:	190 mm/350 mm/355 mm
Weight:	ca. 8 kg (78.5 N) in basic configuration

Environmental conditions

Environment class 3K2	DIN IEC 721 part 3-3
Environment class 2K2	DIN IEC 721 part 3-2
Temperature:	
• Operating (3K2)	15 °C .... 35 °C
• Transport (2K2)	-25 °C .... 60 °C

Condensation in operating must be avoided.

Clearance required to ensure adequate ventilation:	
• left-hand side	min. 200 mm
• front	min. 200 mm
• rear	min. 200 mm

*) These values only apply for a SCENIC Edition Mi with the configuration below. When additional components are incorporated, the power consumption in energy saving mode may exceed the requirements for the environment symbol ("Blue Angel") (30 W).

Processor (512 Kbyte cache):	Pentium II MMX at 333 MHz
Main memory:	64 Mbytes
Floppy disk drive:	1.44 Mbytes
Hard disk drive:	2.1 Gbyte
Software:	Windows 95 *Power management - Advanced...*
CD-ROM drive	24fold

Interrupt table

Please note that an interrupt cannot be used by two applications at the same time.

	Address	Interrupts assigned as shipped	possible Interrupts
Keyboard		IRQ1	
Serial interface COM1	03F8	IRQ4	
Serial port COM 2	02F8	IRQ3	
Fax/modem	03E8		IRQ5
Floppy disk drive controller		IRQ6	
Parallel interface LPT1	0378	IRQ7	
RTC		IRQ8	
Audio controller		assigned by the BIOS	IRQ5, IRQ7, IRQ9
Mouse controller		IRQ12	
Numeric processor		IRQ13	
IDE controller 1		IRQ14	
IDE controller 2		IRQ15	

DMA channels

	DMAs assigned as shipped
Floppy disk drive controller	DMA2
Free/ECP mode	DMA3
Cascaded DMA channels	DMA4

Index

2

2

▶ 2

A
Accessible drive
installing 31
Accumulator, disposal 5
Activating, security measures 21
Address 40
Alphanumeric keypad 20
Alt Gr key 20
Assembling, PC 30
Assignment
DMA channels 40
I/O address 40
interrupt 40
Audio input 13
Audio output 13

B
Battery 37
disposal 5
replacing 37
BIOS Setup 21
security functions 21
Board
installing 36
safety 4

C
Cable
connecting 12
disconnecting 12
Cabling, PC 12
Cache
installing 37
Calculator keypad 20
CD, Windows 26
CD-ROM drive
indicator 16
installing 31
manual 27
CE certificate 5
Changing
floppy disk drive 32
lithium battery 37
Checking, rated voltage 15

Class B Compliance Statement 6
Cleaning 9
Clearance 39
Closing the casing 30
Configuration, BIOS-Setup 21
Connecting
    cables 12
    devices 12
    keyboard 14
    monitor 14
    mouse 14
    parallel port 14
    power voltage 15
    serial port 14
    to power voltage 15
Contents of delivery 11
Control key 21
Ctrl key 21
Ctrl+Alt+Del 21
Cursor control keys 20

D
Dark screen 24
Data
    protection 21
    technical 39
Date, not correct 26
Devices
    connecting 12
    interface 13
Dimensions 39
Diskette 19
    cannot be read or written 25
    write-protection 19
Display
    cleaning 9
Disposal 5
DMA 40
Drifting screen display 25
Drive 30

E
Electrical data 39
Electromagnetic compatibility 5
Energy saving 4
Enter key 20
Environmental conditions 39
Environmental data 39
Ergonomic, video workstation 12
Error
    date 26
    floppy 25
    mouse 25
    screen 24, 25

system unit 23
time 26
Error message 26
ESD 4
Euro key 20
Expansion 29
External devices
connecting 12
ports 13

F
FCC statement 6
Floppy disk drive
changing 32
indicator 16
Function keys 20

G
Game port 13
Green, power-on indicator 16
Guarantee coupon booklet 11

H
Hard disk
defect 26
indicator 16
Hard disk drive
replacing 32

I
I/O address 40
IDE drives 30
Important notes 3
Indicator
power-on indicator 16
power-on indicator fails to light 23
Installing
accessible drive 31
board 36
new Software 23
Insufficient memory 27
Interfaces 13
Interrupt table 40
Italics 2

K
Key combination 20, 21
Keyboard 20
cleaning 9
connecting 14
Keyboard port 13
Keys 20

L
LAN-port 13
Line in 13
Line out 13
Lithium battery 37
    replacing 37

M
Main memory 37
Manufacturer's notes 4
Memory, upgrading 37
Menu key 20
Microphone jack 13
Monitor
    connecting 14
    transporting 8
Monitor port 13
Mouse
    cleaning 9
    connecting 14
    error 25
Mouse port 13

N
New Installation, Software 23
No screen display 24, 25
Not enough memory 27
Notational conventions 2
Note
    board 4
    CE certificat 5
    disposal 5
    energy saving 4
    important 3
    manufacturer 4
    power cord selecction 6
    safety 3
Num Lock key 21
Numeric keypad 20

O
ON/OFF switch 16
Opening, PC 29
Operation 11
Orange, power-on indicator 16
Other manuals 27
Overview
    PC 1
    preparing for use 11

P
Packing material 11
Parallel interface 13
Parallel port

connecting devices 14
PC
cabling 12
cannot boot 23
cleaning 9
closing 30
connecting 12
connecting to power voltage 15
opening 29
ports 13
setting up 12
switching off 16, 18
switching on 16, 18
transporting 8
Ports, external devices 13
Power cord selecction 6
Power management 27
Power-on indicator 16
dark 23
POWERSAV.SCR 4
Preparation for use 11
overview 11
Problems 23
Processor 37
replacing 37
Property protection 21
PS/2 mouse port 13

R
Rated voltage
setting 15
Recycling 5
Reinstalling, hard disk contents 26
Replacing
hard disk drive 32
lithium battery 37
processor 37
Restoring, hard disk contents 26
Return key 20

S
Safety 3
Screen
drifting display 25
stays blank 24
Screen blanking 4
SCSI drives 30
Security function 21
Security measures 21
Select, power cord 6
Serial interface 13
Serial port
connecting devices 14
Setting

rated voltage 15
Settings
BIOS Setup 21, 37
Setup, see BIOS Setup
Shift key 20
Software, New Installation 23
SSLAUNCH 4
Start key 20
Streamer, installing 31
Summer time 26
Surface 39
Switching off, PC 16, 18
Switching on, PC 16, 18
Symbols, explanation of 2
System expansion 29
System settings, BIOS Setup 21
System unit, see PC

T
Technical data 39
Time, not correct 26
Tips 23, 27
Transport 8
Trouble
floppy 25
mouse 25
screen 24, 25
system unit 23
Troubleshooting 23

U
Unpacking 11
Upgrading
memory 37
processor 37
Second Level-Cache 37
Upgrading the Second-level cache 37
USB, Universal Serial Bus 13

V
Ventilation area 39
VESA (DPMS) 4
Video workstation 12

W
Warm boot 21
Windows CD 26
Winter time 26
Write protection, floppy 19

Contents

Introduction **1**
Notational conventions 2

Important notes **3**
Safety 3
Notes on installing and removing boards 4
Manufacturer's notes 4
Energy saving 4
Disposal and recycling 5
CE certificate 5
FCC Class B Compliance Statement 6
Power cord selection 6
For the United States and Canada 7
For the United Kingdom 8
Transporting the PC 8
Cleaning the PC 9

Preparation for use and operation **11**
Unpacking and checking the delivery 11
Preparing the PC for use 11
Setting up the PC 12
Connecting devices 12
Ports for external devices 13
Connecting the mouse 14
Connecting the keyboard 14
Connecting devices with serial or parallel port 14
Connecting the monitor to the line voltage 14
Connecting the PC to the line voltage 15
Indicators and switches 16
Switching on the PC for the first time 17
Switching on the PC 18
Switching off the PC 18
Working with floppy disks 19
Keyboard 20
Important keys and key combinations 20
Settings in BIOS Setup 21
Property and data protection 21
Security functions under Windows 9x 21
BIOS Setup security functions 21

Troubleshooting and tips **23**
Installing new software 23
Power-on indicator remains dark after you have switched on your device 23
The screen stays blank 24
Flickering or drifting stripes on the monitor screen 25
No mouse pointer displayed on the screen 25
The floppy disk cannot be read or written 25
Time and/or date is not correct 26
Error messages on the screen 26
Restoring the hard disk contents 26
Restoring the hard disk contents under Windows NT 26
Tips 27

System expansions **29**
Opening the system unit 29
Assembling the system unit 30
Installing and removing drives 30
Installing an accessible drive 31
Replacing the hard disk or floppy disk drive 32
Installing a board 36
Memory, processor, lithium battery 37

Technical data **39**
Interrupt table 40

Index **41**

A26361-K515-Z100-1-7619
SCENIC Edition Mi
Operating Manual
August 1998 edition

Microsoft, MS, MS-DOS, Windows and Windows NT are Trademarks of Microsoft Corporation.

VESA and DPMS are trademarks of Video Electronics Standards Association.

PS/2 is a registered trademark of International Business Machines, Inc.

Pentium is a registered trademark of Intel Corporation, USA.

All other trademarks referenced are trademarks or registered trademarks of their respective owners, whose protected rights are acknowledged.

Copyright © Siemens AG 1998

All rights, including rights of translation, reproduction by printing, copying or similar methods, even of parts are reserved.

Offenders will be liable for damages.

All rights, including rights created by patent grant or registration of a utility model or design, are reserved.

Delivery subject to availability. Right of technical modification reserved.