500M Module and Daughter Card Data Sheet

500M is Itron's second generation modular modem that enables rapid development and deployment of Smart Utility and Smart City applications anywhere.

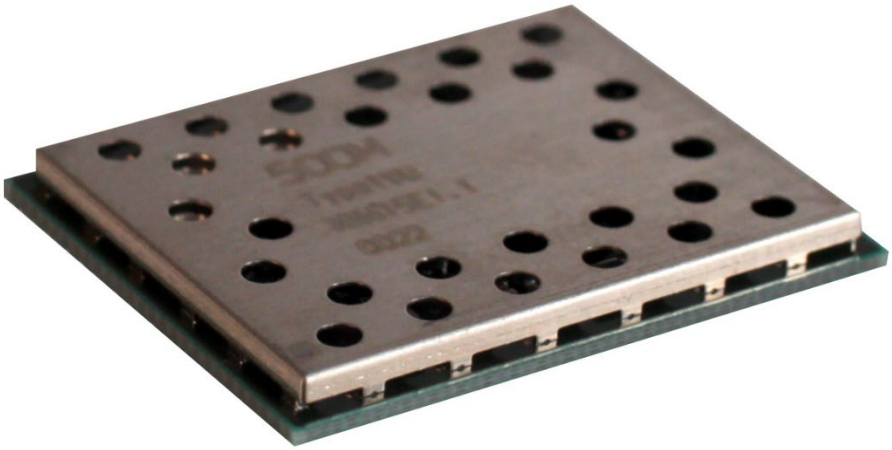

500M and Daughter Card Data Sheet

9 August 2021

815-0444-00

Copyright

© 2021 Itron, Inc. All rights reserved.

Confidentiality Notice

The information contained herein is proprietary and confidential and is being provided subject to the condition that (i) it be held in confidence except to the extent required otherwise by law and (ii) it will be used only for the purposes described herein. Any third party that is given access to this information shall be similarly bound in writing.

Trademark Notice

Itron is a registered trademark of Itron, Inc.

All other product names and logos in this documentation are used for identification purposes only and may be trademarks or registered trademarks of their respective companies.

Suggestions

For more information about Itron or Itron products, see www.itron.com.

If you have questions or comments about the software or hardware product, contact Itron Technical Support Services.

Contact

- Email: support@itron.com
- Itron Access: www.itron.com
- Telephone Itron Technical Support North America: 1-877-487-6602
- For technical support contact information by region, go to www.itron.com and select your country and language

Contents

Copyright 2
Contents 3
New in this Document 5
1. 500M Module 6
1.1. Product Features 6
1.2. Functional Description 6
1.2.1. 500M Family Products Ordering Information 7
1.3. Features 8
1.4. Electrical Specifications 8
1.4.1. Normal Operating Conditions 8
1.4.2. Absolute Ratings 9
1.4.3. Maximum ESD 9
1.4.4. Power Connection 10
1.4.5. Data Connection 11
1.5. Mechanical Specifications 11
1.5.1. Package Drawing and Pad Diagram 12
1.5.2. Connector Functions and Locations 12
1.5.3. Moisture Sensitivity Level 15
1.5.4. Packaging and Manufacturing Guidelines 16
1.6. Radio Specifications 16
1.7. Antenna Connection 17
1.7.1. 50 Ohm PCB Design Guidelines 17
1.7.2. Key Design Parameters 18
1.7.3. PCB Design Guidelines 18
1.8. Transmission Line Measurements 20
1.8.1. External Antenna Integration (RSS-GEN) 21
2. 500M Daughter Card 22
2.1. Product Features 22
2.2. Mechanical Specifications 22
2.2.1. Dimensions 23

2.3. Connector Locations ... 23
2.3.1. Connector Functions and Locations ... 24
3. Reliability and Regulatory Certification ... 28
3.1. FCC/ISED Regulatory Integration Instructions ... 28
3.1.1. Standards Compliance ... 28
3.1.2. Modifications (15.21) ... 28
3.1.3. Part 15 Certification Notice (15.19(a)(3)) and RSS-GEN ... 28
3.1.4. Exigences d'Industrie Canada ... 29
3.1.5. Labeling Requirements for Host Device (DA 00-1407, RSS-GEN) ... 29
3.1.6. OEM Certifications ... 31
3.2. FCC/ISED Integration Test Instructions ... 32
3.2.1. FCC Subpart B disclaimer ... 32
4. Terms and Conditions ... 33
4.1. Important Notice ... 33
4.2. Limitation of Liability ... 33
4.3. Patents ... 33

New in this Document

Revision	Date	Description
001	August 9, 2021	▪ Added 500M Antenna to 500M Family Products Ordering Information ▪ Updated Modulation and Data Rates rows in Radio Specifications ▪ Moved PCB Design Guidelines and Transmission Line Measurements from Chapter 3 to Chapter 1 ▪ Removed the section called "FCC and ISED Government Guidelines" and replaced it with Reliability and Regulatory Certification ▪ Updated specifications in Normal Operating Conditions, Absolute Ratings, and Power Connection
000	October 2020	First publication.

1. 500M Module

1.1. Product Features

- Power-efficient modular design simplifies integration
- Easy-to-use Desktop Developer Kit and developer tools ensure rapid prototyping
- Secure connectivity and performance guarantees for use cases requiring extremely high reliability
- Configuration options for optimizing low latency or extended battery life connections
- Over-the-air firmware updates ensure that devices always support the latest capabilities
- Itron's multi-application platform reduces the cost of network infrastructure and total cost of ownership
- Multi-layer security and end-to-end protection with secure encryption and device authentication
- Optimized data feeds for diverse applications through on-demand and scheduled reads and asynchronous alarms
- Bi-directional communication with 27dBm Tx power extends mesh network range

1.2. Functional Description

500M is a sub-GHz wireless communications system on module optimized for battery-powered devices. 500M removes the security, cost, power, and field life limitations traditionally associated with small, battery-powered endpoints. With multi-layer security, IoT developers can power a wide range of intelligent devices for up to 20 years in the field.

500M leverages Itron's proven self-forming, self-healing networking capabilities to bring connectivity to novel IoT devices and critical infrastructure. Versions of the 500M support both Itron Gen™X and Itron Riva® networks. Region files are provided to developer partners to support worldwide regional sub-GHz ISM frequency bands.

Utilities, cities, and businesses can now reliably connect nearly any device, delivering the intelligence and control needed to enable a new class of IoT applications. 500M is a fully integrated device comprised of the following components:

- Universal asynchronous receiver and transmitter (UART)
- 8MB NOR flash memory
- Security IC
- 32.768 kHZ micro electromechanical systems (MEMS) oscillator

- Real-time clock (RTC)
- Physical (PHY) layer and Media Access Control (MAC) protocol stack
- RF transceiver with power amplifier
- Filters and matching circuitry
- Communications processor

Figure 1 500M component diagram

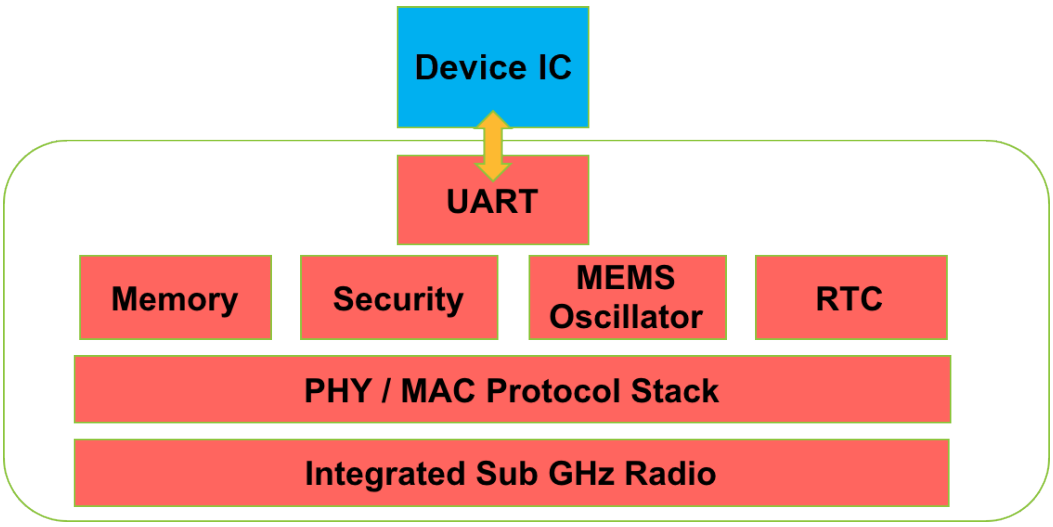

Note: The Device IC described in the figure above is an external device to which the 500M can interface.

1.2.1.500M Family Products Ordering Information

Table 1 describes the ordering information for the 500M product family.

Table 1 Product information

Catalog Number	Product
260-112000	500M Riva Module
260-112002	500M Riva Daughter Card with micro miniature coaxial (MMCX) antenna connector
260-122000	500M GenX Module
260-112002	500M Riva Daughter Card (includes 260-112000)
260-122003	500M Desktop Developer Kit (includes 260-122002)
260-122010	500M GenX Module with 500M developer firmware
260-122012	500M GenX Daughter Card (includes 260-122010)
260-122013	500M Desktop Developer Kit (includes 260-122012)

Catalog Number	Product
155-0200-00	500M Antenna (model WPANT30182-R1A)

1.3. Features

The 500M module features a Land Grid Array (LGA) footprint and is designed to be compatible with harsh environment potted and non-potted applications. Table 2 describes the 500M's main features.

Table 2 500M feature descriptions

Feature	Description
Serial UART	Asynchronous serial interface available for communication with a host application processor
Configuration UART	Secondary UART available for configuration and diagnostic purposes, disabled in production mode
Wired Firmware Update	Partners can update module firmware using the configuration UART
Over the Air Firmware Update	Module and application processor firmware can be updated over the air (OTA) if the feature is supported by the application
Power Control	500M Transmit power can be automatically configured to comply with regional ISM band regulatory requirements
Security	Multi-layer security
Reset	Active low reset pin
MEMS Oscillator	32.768kHz crystal frequency is verified for accuracy
Calibration	500M temperature sensor is calibrated in firmware for accuracy
Small footprint	26mm(L) x 21mm(W) x 3mm(H)

1.4. Electrical Specifications

1.4.1. Normal Operating Conditions

Normal operating conditions define the limits within which the functionality of the device is guaranteed by Itron, in accordance with industry standard design verification testing on a representative sample of devices. Table 3 describes normal operating conditions.

Table 3 Normal operating conditions

Feature	Description
Supply Voltage – nominal	2.55VDC
Power Amplifier Supply Voltage – nominal	3.0VDC
Voltage on Analog Pins	0 to VCC (supply voltage - nominal)
Operating Relative Humidity	5% to 95% RH non-condensing (shall be washed)
Transmit Current	430 mA max typical at 3V at 27 dBm
Receive Current	25mA typical (at 2.55V)
Processor-only current	4.5 mA typical (at 2.55V)
Hibernate Current	6 µA max (at 2.55V)

1.4.2. Absolute Ratings

Stressing the device in excess of one or more of the ratings listed below can cause permanent damage. Operating the module at conditions other than the nominal operating conditions should be avoided. Exposure to absolute rating conditions for extended periods of time may affect device reliability. Table 4 describes absolute ratings for listed features.

Table 4 Absolute ratings

Feature	Rating
Supply Voltage	2.5–3.6 VDC
RF Output level	Up to 27 dBm at nominal supply voltage
RF Input Level	+10dBm
Operating Temp Range	-40°C to +85°C
Storage Temp Range	-40°C to +85°C

1.4.3. Maximum ESD

Itron 500M modules are electrostatic sensitive devices (ESD) and require special precautions when handling. Table 5 lists ESD ratings in terms of voltage.

Table 5 ESD Ratings

Feature	Rating
ESD Suppression I/O pins	HBM: 250V, CDM 250V

Feature	Rating
ESD Suppression antenna pins	Charged device model: 250V

Human Body Model

The Human Body model (HBM) simulates discharge between a human (hand/finger) and conductor (metal rail).

The 500M HBM rating is Class 0 (<250V). Itron recommends that the appropriate ESD handling precautions are taken.

Charged Device Model

The Charged Device model (CDM) simulates discharge when the device itself becomes charged (for example, sliding out of a tube, bag, or sorter) and when contacting a grounded conductor (for example, tabletop, hand, or metal tool). The 500M CDM rating is class C2, <250V. Itron recommends that the appropriate ESD handling precautions are taken.

1.4.4. Power Connection

500M series modules must be supplied through the VCC (V_Micro) pins by a DC power supply with a 2.55V nominal output voltage. Voltage must be stable during module operation as current drawn from VCC pins can vary significantly. The 500M is specified to operate from 2.55V to 3.6V. Table 6 describes the modes and typical 500M operating currents.

Table 6 Modes and currents

Mode	Maximum Current
Deep Sleep	6 µA (at 2.55V)
Sleep	6 µA (at 2.55V)
Rx only	25 mA (at 2.55V)
Tx only	430 mA (at 3V)

VRF/VPA is the radio frequency (RF) power amplifier (PA) power pin which requires regulated 2.55V and 3.0V for normal operation respectively. The VRF and VPA supply is switched using the pins EN_VRF and EN_VPA for Tx and Rx operation.

The 500M module utilizes three power domains for digital logic, power amplifier (PA), and radio (illustrated in the figure below).

Figure 2 Utilization of power domains

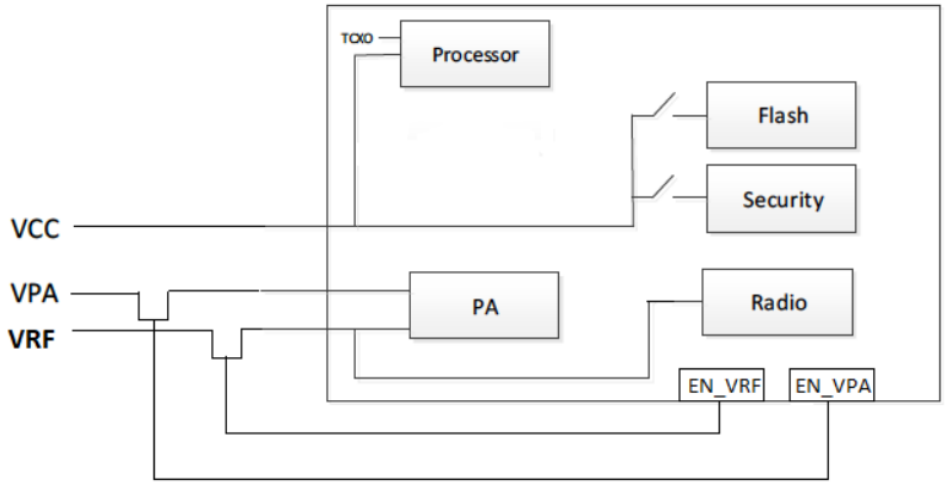

1.4.5. Data Connection

High-Level Data Link Control (HDLC) is the link layer protocol that is used over the serial connection between the host processor and the 500M. Application layer messages encoded as Constrained Application Protocol (CoAP) Protocol Data Units (PDUs) are sent over this interface. Itron provides an abstraction layer called the Sensor API (SAPI) for ease of integration into any endpoint application.

1.5. Mechanical Specifications

This section describes the mechanical specifications of the 500M.

1.5.1. Package Drawing and Pad Diagram

Figure 3 Top shield laser etchings

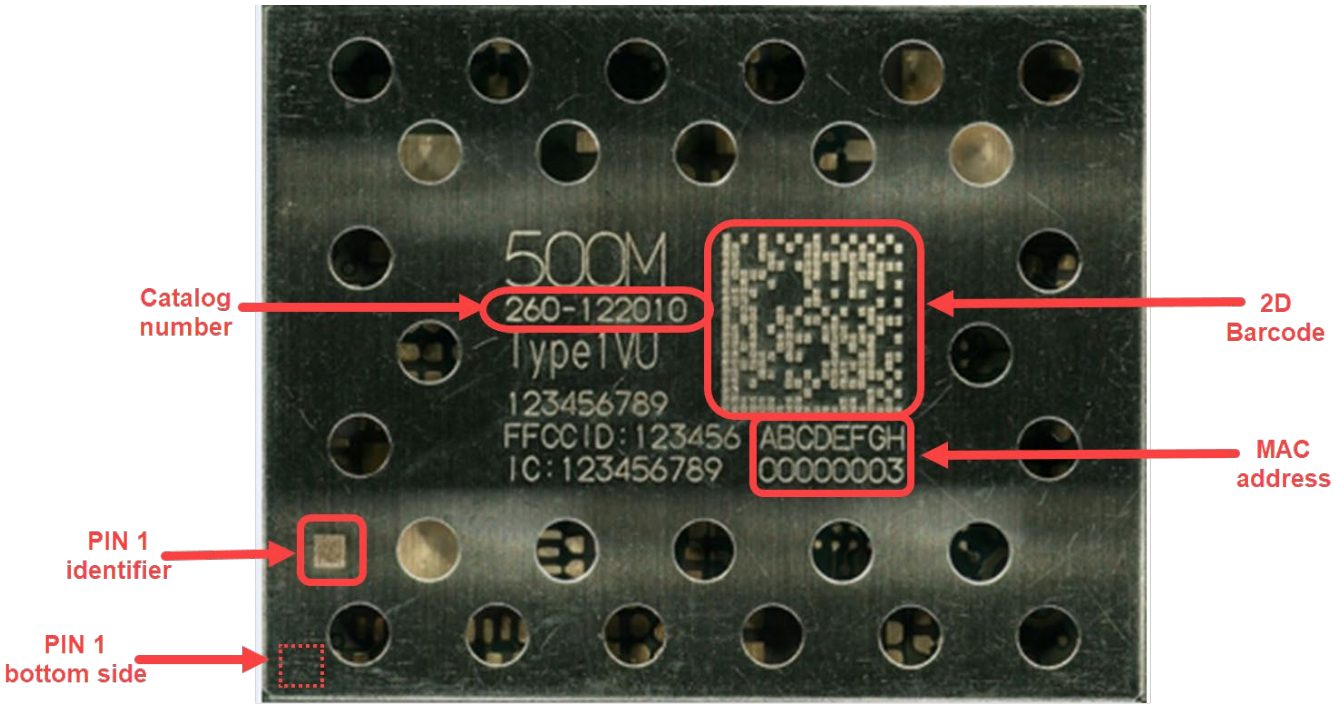

Figure 4 Package and pad identifier drawing

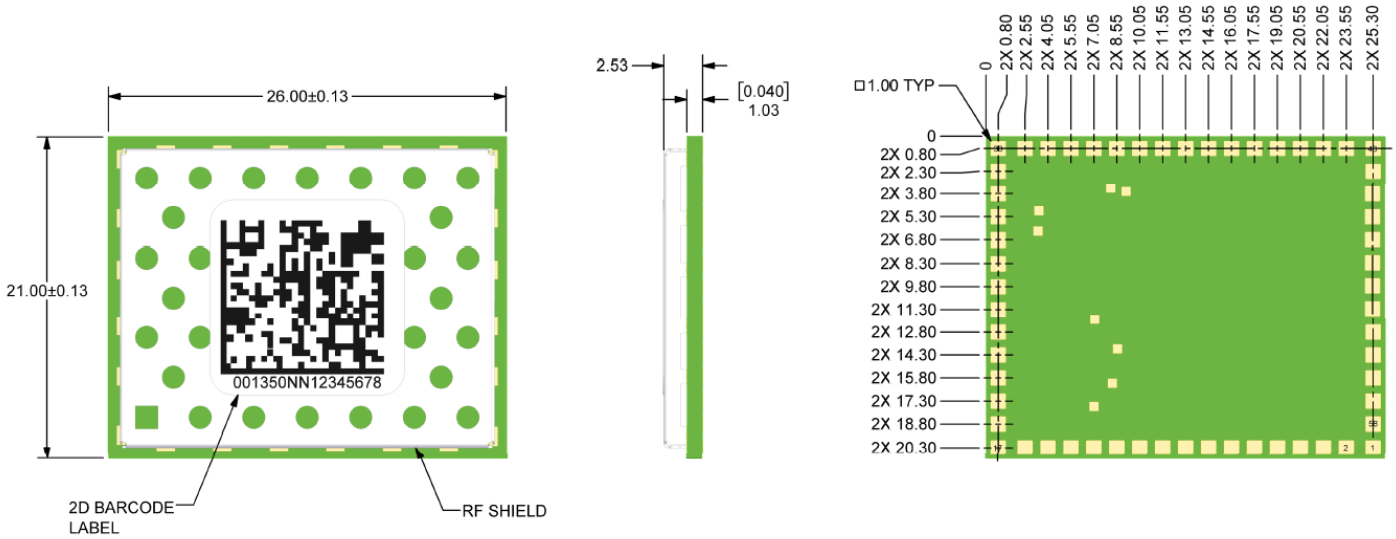

1.5.2. Connector Functions and Locations

The following table describes the PIN numbers, name, and other useful information.

Table 7 Pin numbers and names

PIN Number	Function	PIN name	Input/Output	Description
4	Standard Interface	UART4_TX	PA0 Output	Serial UART interface (up to 115,200 bps, 8-N-1)
5		UART4_RX	PA1 Input	Serial UART interface (up to 115,200 bps, 8-N-1)
47		UART4_WAKE	PA15 Input	Interrupt pin - wake up 500M so host processor can send data
8		LPUART1_TX	PA2 Output	Serial UART interface (up to 115,200 bps, 8-N-1)
9		LPUART1_RX	PA3 Input	Serial UART interface (up to 115,200 bps, 8-N-1)
36		USB_D_N	PA11	NC
37		USB_D_P	PA12	NC
29		USB_OE	PC9	NC
38	Debug	SWDIO	PA13	NC
45		SWCLK	PA14	NC
2		NRST	NRST	NC
48	Additional GPIO	GPIO0	PB3 I/O	Future Use
49		GPIO1	PB4 I/O	Future Use
50		GPIO2	PC15 I/O	Future Use
21	Co-AP Interface	WAKE_OUT	PB11 Output	Interrupt pin - wake up host processor
20		WAKE_IN	PB12 Input	Interrupt pin - wake up 500M so host processor can send data
23		SPI2_SCK	PB13 Output	NC

PIN Number	Function	PIN name	Input/Output	Description
		I2C2_SCL		
		USART3_CTS		
19		SPI2_MISO	PB14 I/O	NC
		I2C2_SDA		
		USATR3_RTS		
18		SPI2_MOSI	PB15 I/O	NC
6		SPI2_SS# (IRQ3)	PC3 I/O	NC
56		I2C4_SDA/I2C3_SDA	PC0 I/O	NC
57		I2C4_SCL/I2C3_SCL	PC1 I/O	NC
10		USART3_TX	PC4 Output	NC
12		USART3_RX	PC5 Input	NC
27	Power Management	EN_VRF	PC6 Output	Enable RF Power
24		DC/DC SYNC/MODE	PC7 Output	Enable Power Supply
25		PWRGD_VPA	PC8 GND	RF Ground
35		LF_CLK	PC14 Output	NC
13		EN_3V3PA	PB1 Output	Enable PA Power
28		LED1	PD2 Output	LED Driver
15		V_Micro	Power	PWR to Micro
52		VPA	Power	PWR to PA
54		VRF	Power	PWR to RF Receiver
43	RF	RF	Output	Antenna connection
42		GND	GND	Antenna GND
44		GND	GND	Antenna GND
1	Ground	GND	Power	Ground

PIN Number	Function	PIN name	Input/Output	Description
3		GND	Power	Ground
7		GND	Power	Ground
11		GND	Power	Ground
14		GND	Power	Ground
16		GND	Power	Ground
17		GND	Power	Ground
22		GND	Power	Ground
26		GND	Power	Ground
30		GND	Power	Ground
31		GND	Power	Ground
32		GND	Power	Ground
33		GND	Power	Ground
34		GND	Power	Ground
39		GND	Power	Ground
40		GND	Power	Ground
41		GND	Power	Ground
46		GND	Power	Ground
51		GND	Power	Ground
53		GND	Power	Ground
55		GND	Power	Ground
58		GND	Power	Ground

1.5.3. Moisture Sensitivity Level

500M is a moisture sensitive device. Itron indicates the moisture sensitivity level (MSL) and peak reflow temperature for the device on each shipping bag and reel label.

Important: Parts must be handled according to the conditions indicated.

The 500M moisture sensitivity rating is MSL 4, <72 hours exposure to air when stored at 30°C and <60% relative humidity, as defined in IPC/JEDEC J-STD-020, *Joint Industry*

Standard Moisture/Reflow Sensitivity Classification for NonHermetic Solid State Surface Mount Devices. If the 500M is not mounted to a circuit board within 72 hours – the maximum "out of bag" or floor life exposure time – then the module must be baked in accordance with IPC/JEDEC J-STD-033, *Handling, Packing, Shipping and Use of Moisture, Reflow, and Process Sensitive Devices* to remove any moisture absorbed. The floor life exposure can be extended by storing in nitrogen or dry air. Prior to any rework, Itron strongly recommends that the printed circuit board be baked in a calibrated oven/chamber for 24 hours at 125°C to remove moisture.

1.5.4. Packaging and Manufacturing Guidelines

The 500M can be delivered in several formats. Refer to the following table for packaging and manufacturing guidelines.

Table 8 Package options and minimum ordering quantities, baked and vacuum bagged prior to shipment

Package	Minimum order quantity
Sample size tube	10
Tray of 45 modules	1 tray
Reel of 500 modules	1 reel

Surface Mount

The 500M coplanarity specification is 4 mils (100um). Therefore, Itron recommends the following:

- Use of a 6 mil (150um) stencil to ensure reliable surface mount
- Host board solder profile to ensure 500M Multi-Chip Module (MCM) is not damaged

Note: 500M is only warranted for one solder reflow. Itron recommends using copper board pads.

1.6. Radio Specifications

The 500M is a communications module designed to be compliant with global sub-GHz ISM band regulations. The following table describes the radio compliance details.

Table 9 Compliance details

Feature	Description
Frequency Band	902-928 MHz and 865-876 MHz
Number of Channels	512 for US (at 10 kbps) and 28 for European (at 50 kbps)
Channel Spacing	50 kHz, 100 kHz, 200 kHz, 300 kHz, 400 kHz
Modulation	OOK, GFSK

Feature	Description
Data Rates	10 kbps, 25 kbps, 50 kbps, 100 kbps, 150 kbps, 300 kbps, 16.384 kbps
Receiver Sensitivity	-114 dBm at 10 kbps

Receiver sensitivity depends on communications protocol and data rate. The table above describes typical measured receive sensitivity, assuming 10% packet error rate (PER) and 250-byte payload.

1.7. Antenna Connection

RF antenna matching and radiation patterns vary depending on the enclosure and other host specifications. Itron recommends the antenna characteristics be tested throughout the product development process. When integrating the 500M into a host application, prudent RF design practices should be followed to avoid degrading module RF performance. These include, but are not limited to:

- All surfaces should be >4mm from the antenna.
- Proper internal antenna use requires a plastic or glass enclosure.
- Metal material within the enclosure affects the radiation patterns. The antenna should be placed with a clear path to the front of the enclosure with no interfering metal.
- All enclosures must be fully tested to ensure proper operation of the 500M module.

1.7.1. 50 Ohm PCB Design Guidelines

Antenna design and RF layout are critical in a wireless system that transmits and receives electromagnetic radiation in free space. The 500M module does not include an antenna connector. The antenna (or unique antenna connector) must be connected to the 500M through a transmission line implemented on the host PCB.

Itron recommends the use of a coplanar waveguide to minimize space and board real estate. The PCB trace should be kept as short as possible to minimize path loss. IPC 6011 and IPC 6012 Class 2 or better PCB manufacturing practices must be followed to ensure repeatable results. The transmission line trace will be bounded on both sides by a ground reference plane. For EMI considerations, this ground plane should be extended and connected to other ground layers, one of which is on the opposite side of the PCB.

The opposite side ground plane should be contiguous under and extend beyond the trace. These ground planes should be stitched together using vias spaced 40-50 mils (2 mm) apart. Route transmission line traces through ground planes in a manner which will not disrupt the integrity of the ground. Avoid routing any other signal traces, especially high-

speed digital signals, near the transmission line. Locate the transmission line trace away from power supply lines and power supply regulation circuitry.

1.7.2. Key Design Parameters

The antenna trace must have a characteristic impedance of 50 Ω +/- 5%. The recommended dimensions and the Gerber layout for the antenna trace are provided on the following pages. Transmission line parameter calculations are required for calculating the key parameters. Although there are many transmission line and trace impedance calculators found online, they are not as thorough as specialized tools and might omit critical variables. Itron recommends the use of AppCAD Design Assistant, a free software that is made available by Avago technologies at https://www.broadcom.com/appcad.

Additional support information on AppCAD can be found at http://www.hp.woodshot.com/.

This reference design uses 1 oz copper. The base PCB material is ITEQ. The IT-180A data sheet, which has an ε_r specified as 4.4, is available at http://www.prototron.com/documents/materials/IT-180A.pdf.

See also Transmission Line Measurements.

1.7.3. PCB Design Guidelines

Figure 5 Design Values Used with PCB Stackup

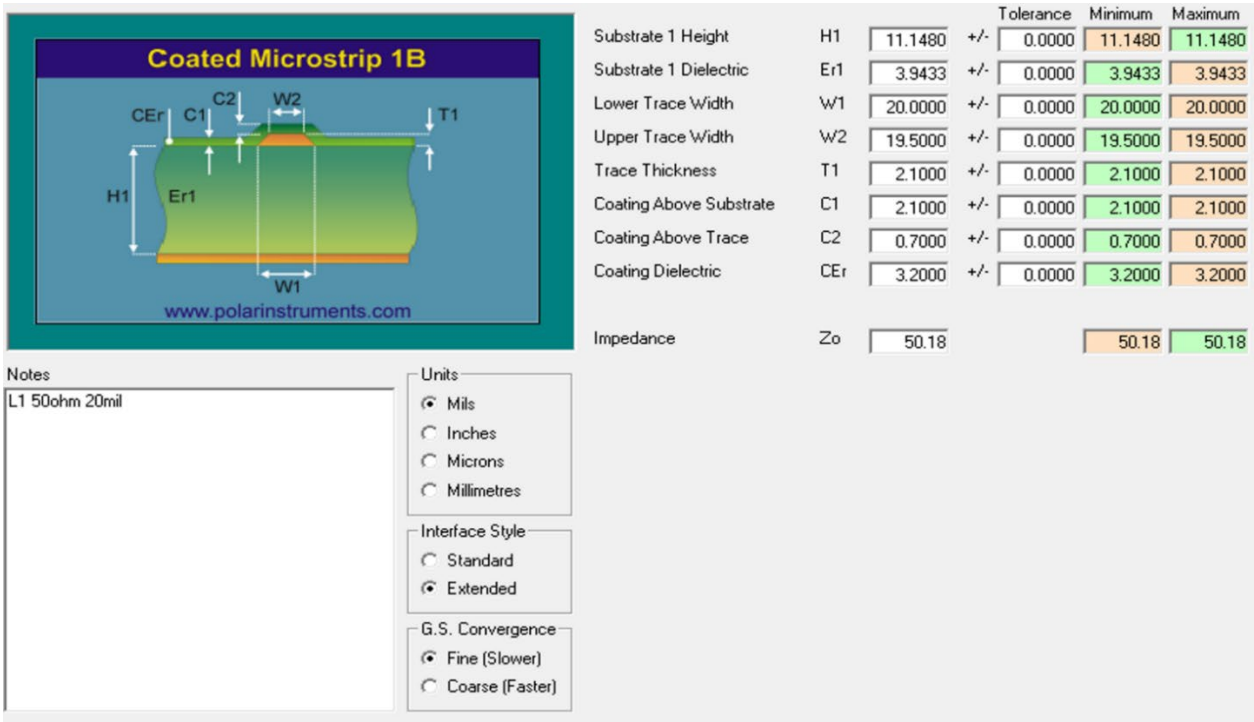

Figure 6 PCB Stackup

1.53mm ± 10% IT-180A									
Layer name	Drill structure	Layer type	Finished (mil)	Finished (mm)		Er		50Ω ± 10%	
		Solder mask		0.000		3.2	Ref. Layer	original: Lw (mil)	simulate: Lw (mil)
TOP		0.5oz+plating	2.1	0.053			L2	20	20
		PP 1080+7628	10.86	0.276		4.0			
L2		1oz	1.25	0.032	IPC-6012				
	PTH	Core	32.5	0.826		4.0			
L3		1oz	1.25	0.032	IPC-6012				
		PP 1080+7628	10.8	0.274		4.0			
BOTTOM		0.5oz+plating	2.1	0.053					
		Solder mask		0.000		3.2			
Total			60.86	1.546					

Figure 7 Coplanar waveguide with ground outline and vias spaced at 50mils

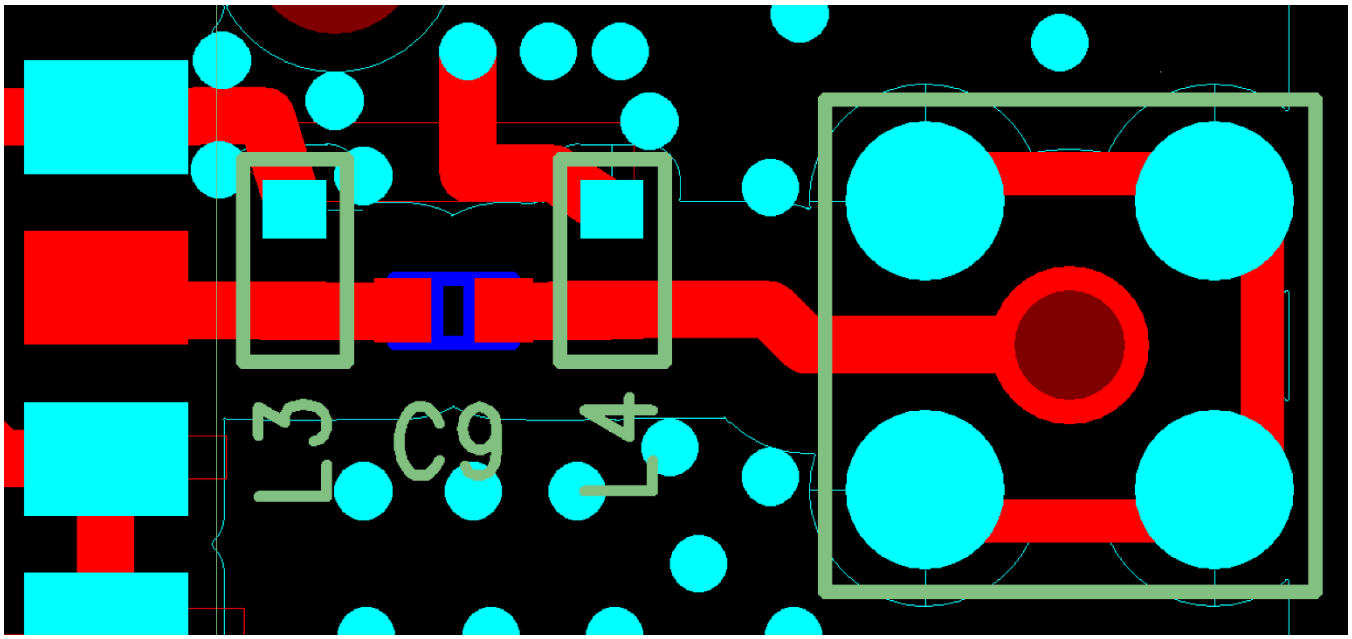

Figure 8 Coplanar waveguide with Full ground pour

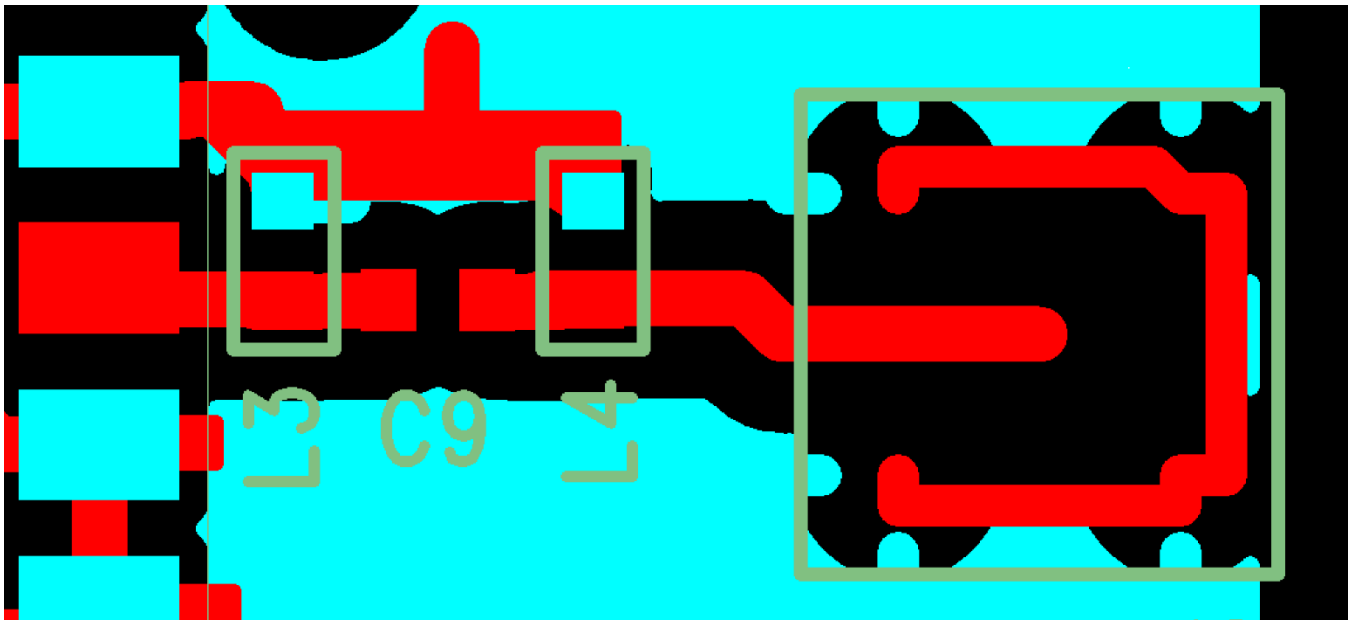

1.8. Transmission Line Measurements

For design verification, use of an S-Parameter Network Analyzer, such as Agilent 8719S may be used to characterize the losses of the transmission line. Solder a calibrated coaxial cable to pin 43 (RF900, RF I/O port) on the PCB to make the following measurements.

Figure 9 S21 Path Loss

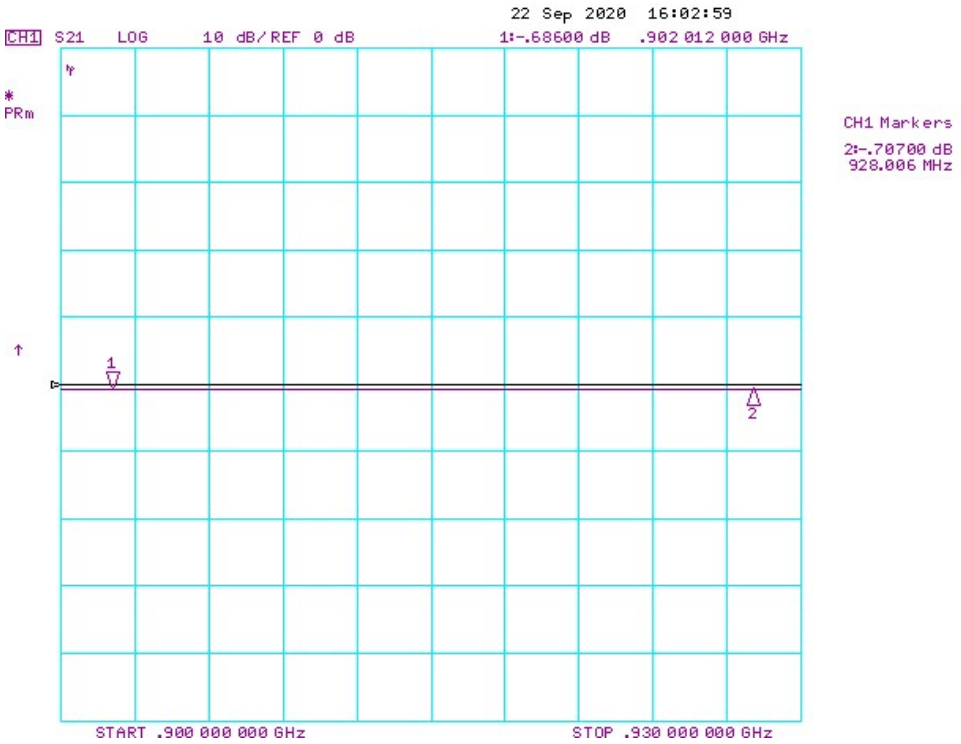

Figure 10 S11_impedance_measurement

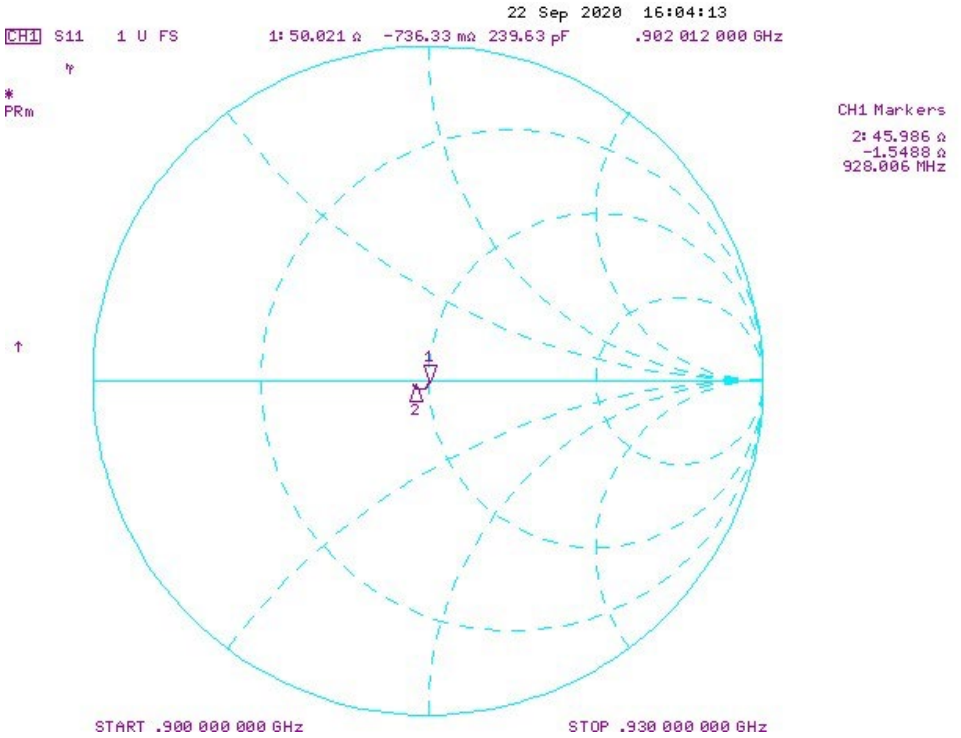

1.8.1. External Antenna Integration (RSS-GEN)

This radio transmitter has been approved by Innovation, Science and Economic Development (ISED) Canada to operate with the antenna type with the maximum permissible gain and required antenna impedance for each antenna type indicated. Antenna types that are not described are strictly prohibited for use with this device because they have a gain greater than the maximum gain indicated for that type.

Under ISED regulations, this radio transmitter can operate only using an antenna of a type and maximum (or lesser) gain approved for the transmitter by ISED. To reduce potential radio interference to other users, the antenna type and its gain should be chosen so that the equivalent isotropically radiated power (EIRP) is not more than what is necessary for successful communication.

2. 500M Daughter Card

The 500M module is available in a Daughter Card form factor with power regulator and MMCX antenna connector. The Daughter Card offers full modular certification in select jurisdictions to enable developer partners to reduce time-to-market. Customers also have the option of potting the Daughter Card for use in harsh environments.

2.1. Product Features

The 500M Daughter Card features the same environmental performance as the 500M module. Convenient headers for quick connection to the Desktop Developer Kit and customer application processor for ease of manufacturing are included.

The following table describes key features of the Daughter Card.

Table 10 Daughter Card features and descriptions

Daughter card feature	Description
Antenna Connector	Integrated MMCX connector for broadband antenna
Power Supply	On-board DC/DC power regulator
Compact size	53mm(L) x 32mm(W) x 10mm(H) circuit board
Serial uART Header	Customer Application Interface for Host Processor
Plug in Header	Easy connection to HDK
Power Input Voltage	3.6 to 12 Volts DC
RF Output level	Up to 27 dBm at nominal supply voltage
Operating Temp Range	-40°C to +85°C
Storage Temp Range	-40°C to +85°C

2.2. Mechanical Specifications

If powering the 500M Daughter Card on the HDK Shield Board, developers can power the Daughter Card using either a:

- 3.6-12V DC power supply (or battery)
- USB cable
- 5V wall adapter

The Daughter Card includes a DC/DC buck converter which regulates the input voltage to the 500M 3V for power amplifier and 2.55 V to RF. The UART can be accessed through the USB cable or HDK shield board headers.

If a user does not want to connect their Daughter Card to the HDK, then the host application processor can connect to the 500M module through a UART serial interface using CoAP over HDLC. The UART can be accessed through the Daughter Card edge connector, vertical stack headers, or the 6-pin CoAP header. The Daughter Card is equipped with an antenna connector. For more information, see *HDLC Specification*.

The following sections describe the mechanical specifications of the 500M.

2.2.1. Dimensions

The following table lists the 500M Daughter Card dimensions.

Table 11 Daughter Card dimensions

Daughter Card parameter	Daughter Card dimension
Length	53 mm
Width	32 mm
Height	10 mm

2.3. Connector Locations

Figure 11 Daughter Card connector locations – top

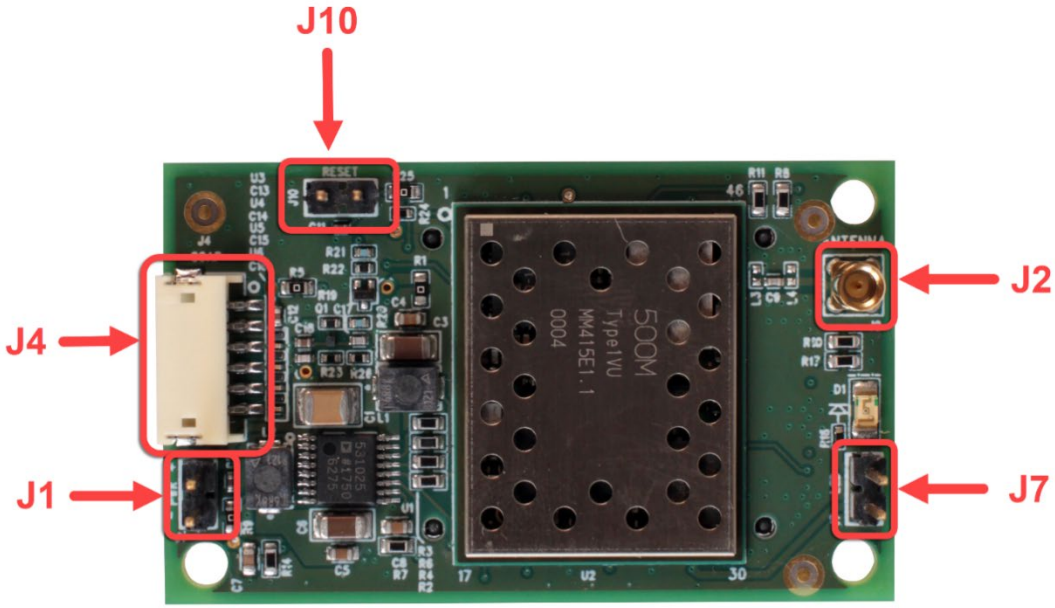

Figure 12 Daughter Card connector locations – bottom

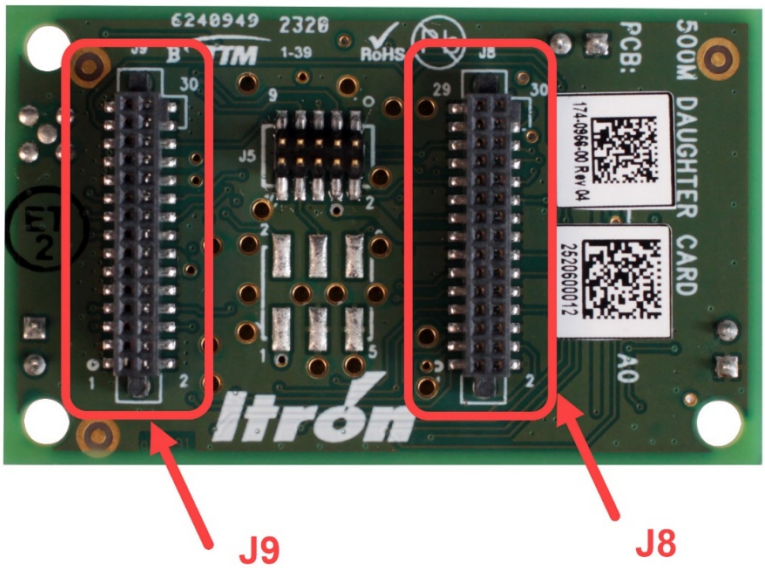

2.3.1. Connector Functions and Locations

The following table describes the PIN numbers, name, and other useful information.

Table 12 Connector Functions and Locations

Pin number	PIN name and ID	Input/Output	Customer connection
J1 Power Connector			
1	Ground	PWR	Ground
2	Vin	PWR	3.6 to 12 Volts DC
J2 Antenna Connector			
1	MMCX Connector	Antenna	Ext Antenna
J4 Customer CoAP Connector			
1	VMICRO	V_Micro	3.3 volts out from Daughter Card
2	Ground		Ground
3	COMM_USART3_RX	PC5	Receive in to DC
4	COMM_USART3_TX	PC4	Transmit out from DC
5	WAKE_IN	PB12	Interrupt to DC
6	WAKE_OUT	PB11	Interrupt from DC

Pin number	PIN name and ID	Input/Output	Customer connection
J7 LED Jumper Connector			
1	LED	LED	Jumper for LED
2	LED1 - Jumper to Pin 1 for LED to turn on	LED	Jumper for LED
J8 HDK Connector			
1	COMM_USB_OE	PC9	NC
2	Ground		Ground
3	EN+3V3RF	PC6 Input	Enable RF Power
4	LED1	PD2 Output	LED Driver
5	PWRGD_3V3PA	PC8 GND	RF Ground
6	Ground		Ground
7	COMM_SPI2_SCK	PB13 Output	NC
8	DC/DC SYNC/MODE	PC7 Output	Enable Power Supply
9	WAKE_OUT	PB11 Output	Interrupt pin - wake up host processor
10	Ground		Ground
11	COMM_SPI2_MISO	PB14 I/O	NC
12	WAKE_IN	PB12 Input	Interrupt pin - wake up 500M so host processor can send data
13	Ground		Ground
14	COMM_SPI2_MOSI	PB15 I/O	NV
15	VMICRO	V_Micro Power	PWR to Micro
16	Ground		Ground
17	EN_3V3PA	PB1 Output	Enable PA Power
18	Ground		Ground
19	Ground		Ground
20	COMM_USART3_RX	PC5 Input	NC

Pin number	PIN name and ID	Input/Output	Customer connection
21	LPUART1_RX	PA3 Input	NC
22	COMM_USART3_TX	PC4 Output	NC
23	Ground		Ground
24	LPUART1_TX	PA2 Output	NC
25	UART4_RX	PA1 Input	NC
26	COMM_SPI2_SS#	PC3 I/O	NC
27	Ground		Ground
28	UART4_TX	PA0 Output	NC
29	Ground		Ground
30	NRST	Input	Reset
J9 HDK Connector			
1	Ground		Ground
2	Ground		Ground
3	Ground		Ground
4	Ground		Ground
5	LF_CLK / CLK_OUT	PC14 Output	NC
6	COMM_USB_D_N	PA11	NC
7	COMM_USB_D_P	PA12	NC
8	SWDIO	PA13	NC
9	Ground		Ground
10	Ground		Ground
11	Ground		Ground
12	Vin	Power	DC 5 Volts
13	Ground		Ground
14	Vin	Power	DC 5 Volts
15	SWCLK	PA14	NC

Pin number	PIN name and ID	Input/Output	Customer connection
16	Ground		Ground
17	UART4_WAKE	PA15 Input	Interrupt pin - wake up 500M so host processor can send data
18	GPIO0	PB3 I/O	Future Use
19	GPIO1	PB4 I/O	Future Use
20	GPIO2	PC15 I/O	Future Use
21	Ground		Ground
22	VPA	VPA Power	Power to PA
23	Ground		Ground
24	VRF	VRF	Power to Receiver
25	Ground		Ground
26	I2C3_SDA / ADC_ENABLE	PC0 I/O	NC
27	I2C3_SCL / ADC123_IN1	PC1 I/O	NC
28	Ground		Ground
29	Ground		Ground
30	Ground		Ground
J10 Reset Jumper Connector			
1	Ground	Ground	Jumper for Reset
2	RESET	Input	Jumper for Reset

3. Reliability and Regulatory Certification

The 500M and all components are designed for 20-year continuous operation. 500M qualification tests are in accordance with the applicable industry standards, including the following:

- ISO 16750
- IPC- 9701A
- IPC-SM-784
- JEDEC 22-A114-B

Note: Notwithstanding the foregoing, the company does not warrant that the product will have a 20-year operational life but has performed reliability testing in accordance with the applicable industry standards.

The 500M is compliant with the Directive 2011/65/EU of the European Parliament and of the Council on the restriction of the use of certain hazardous substances in electrical and electronic equipment, including Commission Delegated Directive (EU) 2015/863 of 31 March 2015 (RoHS).

The 500M is compliant with the Directive 2012/19/EU of the European Parliament on Waste Electrical and Electronic Equipment (WEEE).

All non-Itron parties involved in the development and in the production of the 500M have implemented an Information Security Management System (ISMS) that is certified to the requirements of ISO/IEC 27001:2005 and guided by ISO/IEC 27002:2005.

3.1. FCC/ISED Regulatory Integration Instructions

3.1.1. Standards Compliance

- FCC CFR Title 47 Part 15.247, 15.249
- ISED RSS-247, RSS-210

3.1.2. Modifications (15.21)

Changes or modifications not expressly approved by Itron, Inc. could void the user's authority to operate the equipment.

3.1.3. Part 15 Certification Notice (15.19(a)(3)) and RSS-GEN

This device complies with Part 15 of the FCC Rules and Industry Canada licence-exempt RSS standard(s). Operation is subject to the following two conditions:

1. This device may not cause harmful interference, and

2. This device must accept any interference received, including interference that may cause undesired operation.

Co-location of this module with other transmitters that operate simultaneously are required to be evaluated using the FCC multi-transmitter procedures of KDB 447498 and 996369 for RF exposure, and KDB 996369 D04 for EMC.

This device complies with FCC and ISED radiation exposure requirements for General Population/Uncontrolled Exposure to a fixed device. The device should be installed so that people will not come within 20 cm (8 in.) of the antenna. Host product manuals will need to detail RF exposure details to end users, “The device should be installed so that people will not come within 20 cm (8 in.) of the antenna.”

3.1.4. Exigences d'Industrie Canada

La carte d’interface réseau (NIC) DOIT être installée par un technicien ayant reçu une formation adéquate. Une installation incorrecte peut annuler l’autorisation de l’utilisateur à se servir de l’équipement.

Les changements ou modifications apportés sans l’approbation expresse de l’autorité responsable de la conformité pourront entraîner l’annulation de l’autorisation d’utilisation de cet équipement.

Le présent appareil est conforme aux CNR d’Industrie Canada applicables aux appareils radio exempts de licence. L’exploitation est autorisée aux deux conditions suivantes:

1. l’appareil ne doit pas produire de brouillage, et.
2. l’utilisateur de l’appareil doit accepter tout brouillage radioélectrique subi, même si le brouillage est susceptible d’en compromettre le fonctionnement.

Cet appareil est conforme aux exigences de la FCC et ISED en matière d'exposition aux rayonnements pour la population générale / exposition non contrôlée. L'appareil doit être installé de manière à ce que personne ne s'approche à moins de 20 cm (8 po) de l'antenne.

L’antenne de cet émetteur ne doit pas se trouver à proximité de ou fonctionner en association avec une autre antenne ou un autre émetteur. La co-localisation de ce module avec d’autres émetteurs fonctionnant simultanément doit être évaluée.

3.1.5. Labeling Requirements for Host Device (DA 00-1407, RSS-GEN)

The host device shall be properly labelled to identify the module within the host device. This is done by labelling, in a visible location, the FCC ID and ISED, preceded by the words “Contains transmitter module” or the word “Contains,” as follows:

Model: 500M

Contains FCC ID: HSW-500M

Contains IC: 4492A-500M

Le périphérique hôte doit être correctement étiqueté pour identifier le module dans le périphérique hôte. Pour ce faire, vous devez identifier, dans un endroit visible, les identifiants FCC et ISED, précédés des mots “Contains transmitter module” ou du mot “Contains,” comme suit:

Model: 500M

Contains FCC ID: HSW-500M

Contains IC: 4492A-500M

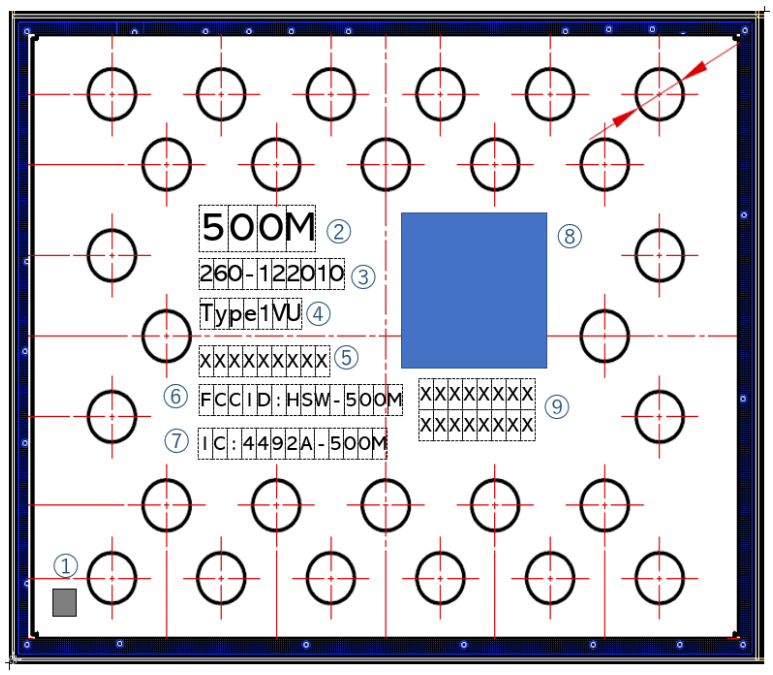

	Information	Marking word	Size/Character	Remark
1	#1 pin direction	-	0.8*0.8mm	
2	P/N (Itron)	500M	1.5*1.0mm	
3	Catalog number	260-122010	1.0*0.5mm	
4	P/N (Murata)	Type1VU	1.0*0.5mm	
5	Inspection number	XXXXXXXXX	1.0*0.5mm	9 digits defined by factory
6	FCC ID	FCCID:HSW-500M	1.0*0.5mm	
7	IC ID	IC:4492A-500M	1.0*0.5mm	
8	2D code	-	5.0*5.0mm	16-digit MAC address + 13 digits traceability info.
9	MAC address	XXXXXXXXXXX	1.0*0.5mm	16-digit MAC address

3.1.6. OEM Certifications

Itron 500M is FCC/IC Certified as Limited Modular Approval (LMA). LMA may be granted to a device which cannot meet all the requirements of a Single Modular Transmitter and if compliance can be demonstrated under the operating conditions in which the device will be used. OEMs have the following options for FCC/IC Certification using an LMA:

Option 1: Use current FCC/IC Grant, without need of an additional Certification with use of the Daughter Board and WP WPANT30182-RA. Follow these rules:

- Use an external antenna of same type as tested (WP WPANT30182-RA) with equal or less gain,
- Deliver power regulation to Daughter Board
- Label the host device with, “Contains FCC ID: HSW-500M” and “Contains IC: 4492A-500M.”
- The user’s manual for the integrated end product must contain the following information in a prominent location: To comply with FCC & IC RF exposure requirement, the antenna used for this transmitter must be installed to provide a separation distance of at least 20 cm (8 in.) from all persons and must not be co-located or operating in conjunction with any other antenna or transmitter.

Option 2: Use current FCC/IC Grant, without need of an additional Certification following these rules:

- Design to the strict guidelines for layout as described in *50 ohm PCB Design Guidelines*,
- Use an external antenna of same type as tested (WP WPANT30182-RA) with equal or less gain,
- Deliver power regulation to 500M as described in *Recommended Operating Conditions*,
- Deliver buffered modulation/data inputs to 500M
- The integration would require some additional conformity against CFR 47 Parts 15.203, 15.209, and RF exposure.
- The user’s manual for the integrated end product must contain the following information in a prominent location: To comply with FCC & IC RF exposure requirement, the antenna used for this transmitter must be installed to provide a separation distance of at least 20 cm (8 in.) from all persons and must not be co-located or operating in conjunction with any other antenna or transmitter.
- Request for authorization to use the Original Grant with evidence.
- Label the host device with, “Contains FCC ID: HSW-500M” and “Contains IC: 4492A-500M.”

Option 3: If all rules from Option 2 are used, but a different type of antenna is required for the application, request a Change in ID application to reuse data from the current FCC/IC Grant, then apply for a Class 2 Permissive Change to add the antenna. The integration would require some additional conformity against CFR 47 Parts 15.203, 15.209, and RF exposure to add antenna to the Certification.

Contact Itron for authorization to apply for a Class II Permissive Change.

Option 4: Integration will need to pursue own full FCC Certification if design does not follow strict guidelines for layout. OEM may choose to obtain own FCC Certification even if guidelines are followed.

3.2. FCC/ISED Integration Test Instructions

For integration test instructions, see the *Regulatory Certification Tool User Guide*.

3.2.1. FCC Subpart B disclaimer

This FCC/ISED limited module is only FCC authorized for the specific rule parts (i.e., FCC transmitter rules) listed on the grant. Any host integration of this limited module will need to be further assessed for compliance to any other FCC rules that apply to the host not covered by the modular transmitter grant of certification. The module contains unintentional-radiator digital circuitry, the final host product is still required to meet Part 15 Subpart B compliance testing with the modular transmitter installed.

To ensure that no intentional radiated transmitter functions are enabled, follow the instructions outlined in the chapter called "Receive Test Frame (0xB3)" in the *Regulatory Certification Test Tool User Guide*.

4. Terms and Conditions

4.1. Important Notice

Radio Frequency (RF) transmission and reception cannot be guaranteed. Data transmission using Itron's wireless modules is susceptible to delays or data loss even when used as recommended with a well-designed network. Itron's wireless module should not be used in life or mission critical applications in which failure to transmit or receive could result in damage, loss of property, personal injury or loss of life. Itron accepts no responsibility for damages resulting from failure to transmit or receive such data.

4.2. Limitation of Liability

This data sheet is provided as a guide to proper use of Itron's wireless module, and Itron makes no warranties, expressed or implied, of merchantability, fitness for a particular purpose, or non-infringement. The information in this data sheet is subject to change without notice.

Itron and its affiliates disclaim liability for any and all direct, indirect, incidental or consequential, punitive or exemplary damages including but not limited to loss of profits or revenue arising out of the use of or inability to use any Itron product.

4.3. Patents

This product contains technology developed by or for Itron, and Itron retains exclusive right to sell. Use or resale is not permitted without express written consent from Itron.