Application Note

Type 2FR Hostless Wi-Fi® 6 + Bluetooth® LE 5.4 /802.15.4 Tri-Radio Module

NXP RW612 Chipset for 802.11a/b/g/n/ac/ax + Bluetooth LE 5.3/IEEE 802.15.4 Radio Law Certification Application Note - Rev. 1.0

- Design Name: Type 2FR
- P/N: LBES0ZZ2FR

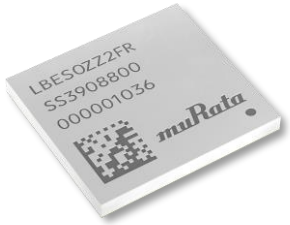

Table of Contents

1 General Information for Radio Regulatory Certification 5
1.1 Application Model Part Number 5
1.2 Marking / Dimensions 5
1.3 Package Label 6
1.4 Country of Origin 7
2 Radio Regulatory Certification Information by Country 7
2.1 FCC 7
2.1.1 Marking and Dimensions 8
2.1.2 Pin Layout 8
2.1.3 Operating Conditions 10
2.1.4 RF Power Setting 11
2.1.5 Scanning and Ad Hoc Connection modes 17
2.1.6 Integration Instructions 17
2.1.7 About Power Supply (Limited Condition) 20
2.1.8 Trace Antenna and Feed Line 21
2.1.9 Layout Guidance for Microstrip Design and External Antenna 22
2.2 ISED 25
2.2.1 Antenna List 27
2.2.2 Marking and Dimensions 27
2.2.3 Pin Layout 27
2.2.4 Operating Conditions 27
2.2.5 RF Power Setting 28
2.2.6 Scanning and Ad Hoc Connection Modes 28
2.2.7 Antennas 30
2.2.8 Layout Guidance for Microstrip Design and External Antenna 32
2.2.9 About Power Supply (Limited Condition) 32
2.3 EU 32
2.3.1 RF Power Setting 33
2.3.2 Scanning and Ad Hoc Connection Modes 36
2.3.3 Layout Guidance for Microstrip Design and External Antenna 37
2.4 Japan 38
2.4.1 Product Outline 38
2.4.2 Feature 38
2.4.3 RF Power Setting 39
2.4.4 Scanning and Ad Hoc Connection Modes 41

2.4.5 Antenna....42
2.4.6 Notification....44
Revision History....46

Figures

Figure 1: Marking....5
Figure 2: Package (Humidity-proof packaging)....6
Figure 3: Package Label Display Example....7
Figure 4: Pin Layout....9
Figure 5: EVB Design Used for Testing....21
Figure 6: Trace Antenna and Feed Line of The Jig....22
Figure 7: 50 Ω microstrip line and Type 2FR_Antenna....23
Figure 8: Trace antenna (Type 2FR_Antenna) Layout Guide....23
Figure 9: Microstrip RF Trace Structure....24
Figure 10: Antenna Measurement Directions (Japan)....44
Figure 11: Antenna Measurement Result (Japan)....44

Tables

Table 1: Document Conventions....4
Table 2: Marking....5
Table 3: Dimension....6
Table 4: Terminal Configurations....9
Table 5: Operating Conditions....10
Table 6: WLAN RF Power Setting - 2.4 GHz 802.11 b/g/n(HT20) (FCC)....11
Table 7: WLAN RF Power Setting - 2.4 GHz 802.11ax (HE20) (FCC)....12
Table 8: BLE / IEEE 802.15.4 RF Power Setting (FCC)....13
Table 9: WLAN RF Power Setting - 5 GHz 802.11a (FCC)....13
Table 10: WLAN RF Power Setting - 5 GHz 802.11n (HT20) (FCC)....13
Table 11: WLAN RF Power Setting - 5 GHz 802.11ac (VHT20) (FCC)....14
Table 12: WLAN RF Power Setting – 5 GHz 802.11ax (HE20) (FCC)....14
Table 13: Scanning and Ad Hoc Connection Capabilities (FCC)....17
Table 14: Antennas (FCC)....18
Table 15: Scanning and Ad Hoc Connection Capabilities (ISED)....28
Table 16: Antennas (ISED)....30
Table 17: WLAN RF Power Setting - 2.4 GHz 802.11b (EU)....33
Table 18: WLAN RF Power Setting - 2.4 GHz 802.11g (EU)....34
Table 19: WLAN RF Power Setting - 2.4 GHz 802.11n (HT20) (EU)....34

Table 20: WLAN RF Power Setting - 2.4 GHz 802.11ax (HE20) (EU) 34
Table 21: BLE / IEEE 802.15.4 RF Power Setting (EU) 35
Table 22: WLAN RF Power Setting - 5 GHz 802.11a for Channels 36 ~ 165 (EU) 35
Table 23: WLAN RF Power Setting - 5 GHz 802.11n (HT20) for Channels 36 ~ 165 (EU) 35
Table 24: WLAN RF Power Setting - 5 GHz 802.11ac (VHT20) for Channels 36 ~ 165 (EU) 35
Table 25: WLAN RF Power Setting - 5 GHz 802.11ax (HE20) for Channels 36 ~ 165 (EU) 36
Table 26: Scanning and Ad Hoc Connection Capabilities (EU) 36
Table 27: WLAN RF Power Setting - 2.4 GHz 802.11b (Japan) 39
Table 28: WLAN RF Power Setting - 2.4 GHz 802.11g (Japan) 39
Table 29: WLAN RF Power Setting - 2.4 GHz 802.11n (HT20) (Japan) 39
Table 30: WLAN RF Power Setting - 2.4 GHz 802.11ax (HE20) (Japan) 40
Table 31: BLE Modulation (Spread Spectrum Frequency Hopping System) - 2402 MHz ~ 2480 MHz (2 MHz Interval 40 Waves) (Japan) 40
Table 32: IEEE 802.15.4 SS Technique (Direct Sequence Spread Spectrum) - 2405 MHz ~ 2480 MHz (5 MHz Interval 16 Waves) (Japan) 40
Table 33: WLAN RF Power Setting - 5 GHz 802.11a for Channels 36 ~ 144 (Japan) 40
Table 34: WLAN RF Power Setting - 5 GHz 802.11n (HT20) for Channels 36 ~ 144 (Japan) ... 41
Table 35: WLAN RF Power Setting - 5 GHz 802.11ac (VHT20) for Channels 36 ~ 144 (Japan) 41
Table 36: WLAN RF Power Setting - 5 GHz 802.11ax (HE20) for Channels 36 ~ 144 (Japan) . 41
Table 37: Scanning and Ad Hoc Connection Capabilities (Japan) 42
Table 38: Antenna (Japan) 42

About This Document

Murata's Type 2FR is a small and very high-performance module based on NXP RW612 combo chipset, supporting IEEE 802.11a/b/g/n/ac/ax + Bluetooth 5.3 BR/EDR/LE / IEEE802.15.4. This application note provides Radio Law Certification user manual. It is designed to ensure that module manufacturers correctly communicate the necessary information to host manufacturers that incorporate their modules. Refer to Type 2FR Datasheet for module specification.

Audience & Purpose

The Intended audience of this document are the manufacturers and host manufacture that will integrate this module to their modules.

Document Conventions

Table 1 describes the document conventions.

Table 1: Document Conventions

Conventions	Description
	Warning Note Indicates very important note. Users are strongly recommended to review.
	Info Note Intended for informational purposes. Users should review.
	Menu Reference Indicates menu navigation instructions. **Example**: Insert→Tables→Quick Tables→Save Selection to Gallery
	External Hyperlink This symbol indicates a hyperlink to an external document or website. **Example**: Murata Click on the text to open the external link.
	Internal Hyperlink This symbol indicates a hyperlink within the document. **Example**: Operating Conditions Click on the text to open the link.
`Console input/output or code snippet`	**Console I/O or Code Snippet** This text ***Style*** denotes console input/output or a code snippet.
`# Console I/O comment` `// Code snippet comment`	**Console I/O or Code Snippet Comment** This text ***Style*** denotes a console input/output or code snippet comment. • Console I/O comment (preceded by "#") is for informational purposes only and does not denote actual console input/output. • Code Snippet comment (preceded by "//") may exist in the original code.

1 General Information for Radio Regulatory Certification

This section contains the following topics:

- Application model part number
- Label
- Package Label
- Country of Origin

1.1 Application Model Part Number

Application model part number: **LBES0ZZ2FR**

1.2 Marking / Dimensions

Figure 1 shows the module labels. **Table 2** and **Table 3** describes the labels.

Figure 1: Marking

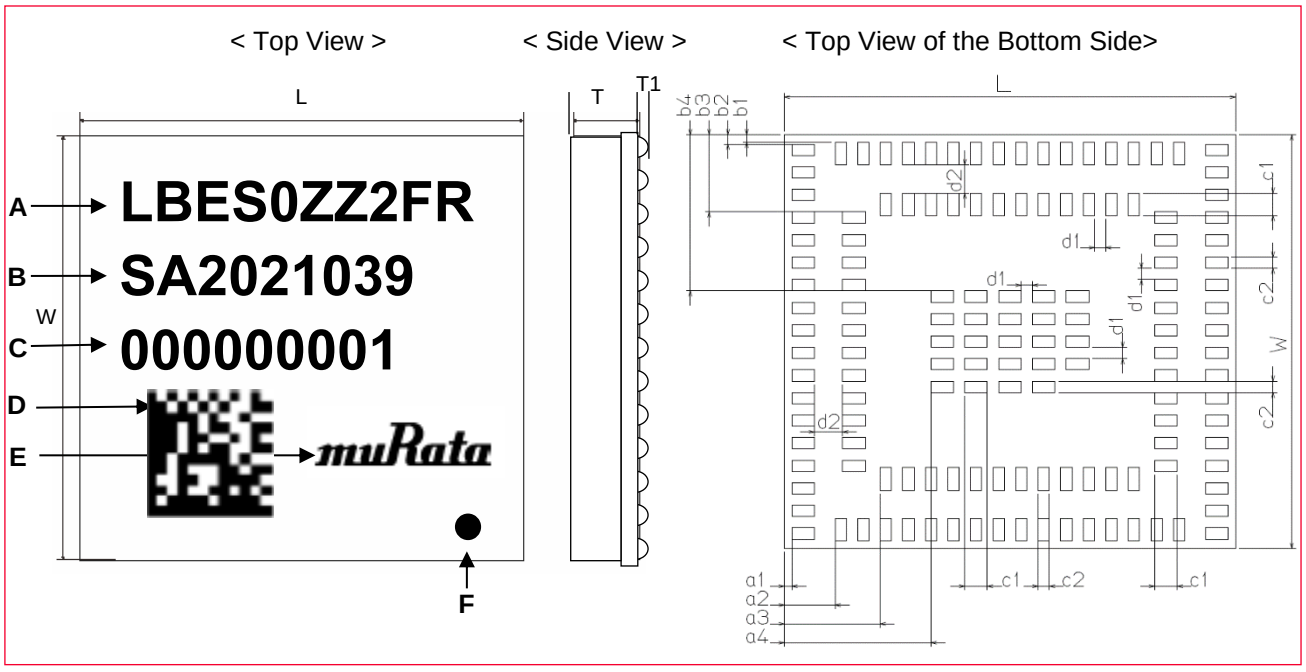

Table 2: Marking

Marking Label	Meaning
A	Module type
B	Inspection number
C	Serial number
D	2D code
E	Murata logo

Marking Label	Meaning
F	Pin 1 marking

Table 3: Dimension

Labels	Dimensions	Labels	Dimensions	Labels	Dimensions
L	12.0 +/- 0.20	W	11.0 +/- 0.20		
T	1.55 maximum	T1	0.04 typical (Bump)		
a1	0.20 +/- 0.20	b1	0.20 +/- 0.20	c1	0.60 +/- 0.10
a2	1.35 +/- 0.20	b2	0.25 +/- 0.20	c2	0.30 +/- 0.10
a3	2.55 +/- 0.20	b3	2.05 +/- 0.20	d1	0.30 +/- 0.10
a4	3.90 +/- 0.20	b4	4.15 +/- 0.20	d2	0.75 +/- 0.10

Since there is no space to describe the notational requirements of each country, we are applying for the notational requirements to be posted in the manual or package.

1.3 Package Label

Figure 2 shows the package and **Figure 3** shows an example of the package label.

Figure 2: Package (Humidity-proof packaging)

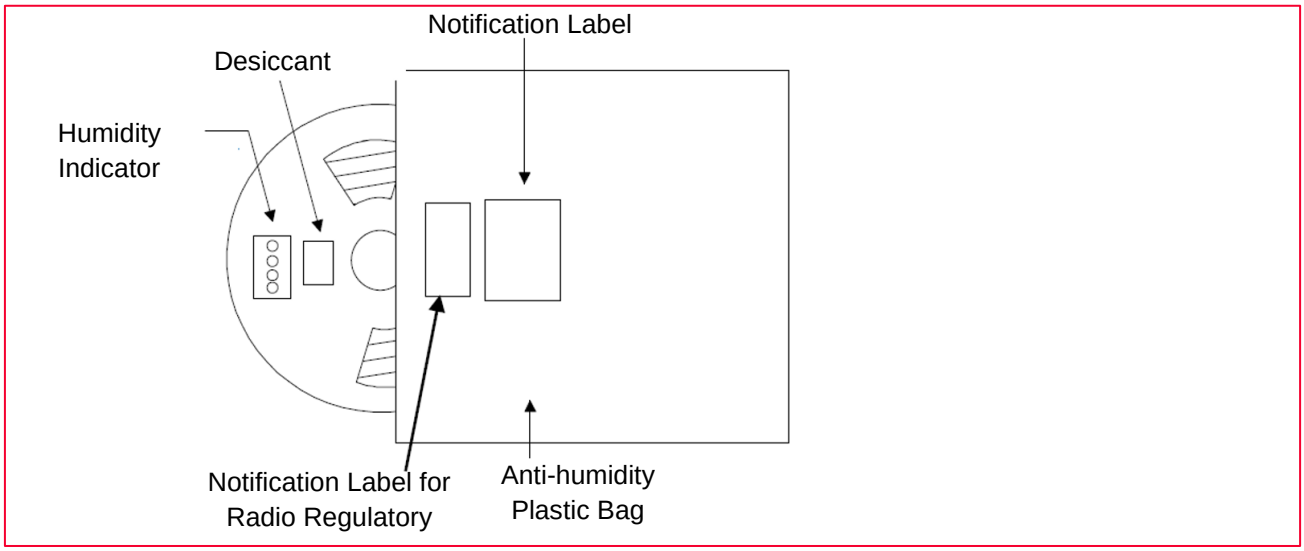

Figure 3: Package Label Display Example

The package label may be attached on one side only.

1.4 Country of Origin

China

SHENZHEN MURATA TECHNOLOGY CO., LTD.

Some countries have applied for certification in two countries, China and Japan, in preparation for future factory changes, but the production site in the delivery specifications is the above-mentioned factory in China.

2 Radio Regulatory Certification Information by Country

This section contains the following country/region specific information:

- <FCC>
- <ISED>
- <EU>
- <Japan>

2.1 FCC

Model Name: LBES0ZZ2FR

FCC ID: HSW2FR

This module is not sold to general end users directly. Therefore, there is no user manual of module. For the details about this module, please refer to the specification sheet of module. This module should be installed in the host device according to the interface specification (installation procedure)

The OEM integrator has to be aware not to provide information to the end user regarding how to install or remove this RF module in the end user's manual of the end product which integrates this module. The end user manual shall include all required regulatory information/warning as shown in User manual.

This device complies with part 15 of the FCC Rules. Operation is subject to the following two conditions:

1. This device may not cause harmful interference, and
2. This device must accept any interference received, including interference that may cause undesired operation

FCC CAUTION: Changes or modifications not expressly approved by the party responsible for compliance could void the user's authority to operate the equipment.

This transmitter must not be co-located or operated in conjunction with any other antenna or transmitter.

This device complies with below part 15 of the FCC Rules.

- Part 15 Subpart C
- Part 15 Subpart E

Since there is no space which indicates FCC ID on this module, FCC ID is indicated in a manual. If the FCC ID is not visible when the module is installed inside another device, then the module is installed must also display a label referring to the enclosed module.

The modular transmitter is only FCC authorized for the specific rule parts (i.e., FCC transmitter rules) listed on the grant, and the host product manufacturer is responsible for compliance to any other FCC rules that apply to the host not covered by the modular transmitter grant of certification. The final host product still requires Part 15 Subpart B compliance testing with the modular transmitter installed.

This module is designed for mounting inside of the end product by us professionally. Therefore, it complies with the antenna and transmission system requirements of §15.203.

Since there is no space which indicates FCC ID on this module, FCC ID is indicated in a manual. If the FCC ID is not visible when the module is installed inside another device, then the module is installed must also display a label referring to the enclosed module.

2.1.1 Marking and Dimensions

Refer to section 1.2.

2.1.2 Pin Layout

Figure 4 shows the pin layout.

Figure 4: Pin Layout

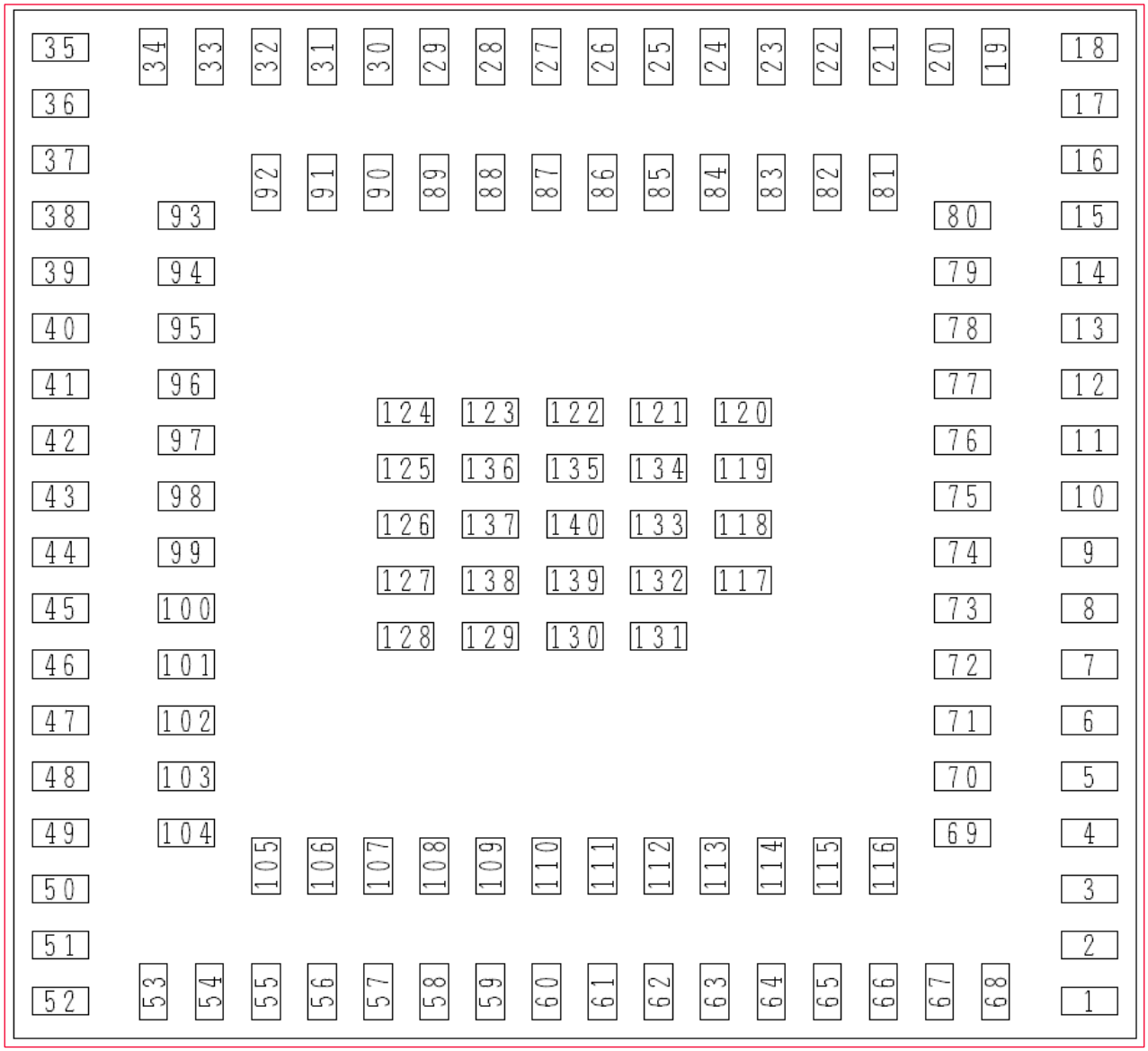

Table 4 describes the pins.

Table 4: Terminal Configurations

No.	Terminal Name	No.	Terminal Name	No.	Terminal Name
1	GND	48	GPIO_19	95	GPIO_38
2	VIO_RF	49	GPIO_11	96	GPIO_27
3	GND	50	GND	97	GPIO_24
4	RF_CNTL_0	51	VIO_1	98	GPIO_28
5	GND	52	GND	99	GPIO_26
6	RF_MAIN	53	RF_CNTL_1	100	GPIO_15
7	GND	54	GND	101	GPIO_21
8	GPIO_58	55	RF_CNTL_2	102	GPIO_16
9	GPIO_2	56	GND	103	GPIO_10
10	GPIO_4	57	BT_OUT	104	GPIO_1
11	PDn	58	GND	105	GPIO_9

No.	Terminal Name	No.	Terminal Name	No.	Terminal Name
12	GPIO_47	59	RF_CNTL_3	106	GPIO_14
13	GPIO_30	60	GPIO_6	107	GND
14	GPIO_32	61	GPIO_5	108	GPIO_8
15	GPIO_31	62	GPIO_12	109	GPIO_55
16	GND	63	GPIO_51	110	GND
17	VIO_6	64	GPIO_52	111	GPIO_45
18	GND	65	GPIO_7	112	GPIO_54
19	VDD18	66	GND	113	GPIO_53
20	GND	67	BT_IN	114	GND
21	GPIO_62	68	GND	115	GPIO_44
22	GPIO_56	69	EXT_REQ	116	GPIO_50
23	GPIO_3	70	EXT_GNT	117	GND
24	GPIO_57	71	EXT_PRI	118	GND
25	GND	72	EXT_FREQ	119	GND
26	VCC33	73	GPIO_43	120	GND
27	VCC33	74	GPIO_42	121	GND
28	GND	75	GPIO_46	122	GND
29	USB_DP	76	GPIO_60	123	GND
30	USB_DM	77	GPIO_59	124	GND
31	GND	78	GPIO_34	125	GND
32	USB_ID	79	GPIO_33	126	GND
33	USB_VBUS	80	CS_Int_Flash	127	GND
34	VIO_3	81	GPIO_49	128	GND
35	GND	82	GPIO_48	129	GND
36	VIO_2	83	GPIO_63	130	GND
37	VIO_5	84	GND	131	GND
38	GPIO_40	85	GPIO_61	132	GND
39	GPIO_41	86	GND	133	GND
40	GPIO_39	87	GPIO_25	134	GND
41	GPIO_37	88	GPIO_22	135	GND
42	GPIO_29	89	GND	136	GND
43	GPIO_13	90	GND	137	GND
44	GPIO_17	91	GND	138	GND
45	GPIO_20	92	GPIO_23	139	GND
46	GPIO_18	93	GPIO_36	140	GND
47	GPIO_0	94	GPIO_35		

2.1.3 Operating Conditions

Table below describes the operating conditions.

Table 5: Operating Conditions

Parameter	Minimum	Typical	Maximum	Unit
Operating Temperature	-40		+85	C

Supply Voltage		3.14	3.3	3.46	V
I/O Voltage	3.3 I/O Supply	3.14	3.3	3.46	V
	1.8 I/O Supply	1.71	1.8	1.89	V

VIO, SD_VIO have two systems, 1.8V system and 3.3V system. However, these do not affect the RF characteristics.

2.1.4 RF Power Setting

This section describes the RF power settings.

2.1.4.1 RF Power Setting for 2.4 GHz WLAN

RF Power Settings for 2.4 GHz WLAN are described in the following tables.

Table 6: WLAN RF Power Setting - 2.4 GHz 802.11 b/g/n(HT20) (FCC)

Mode	Rate/MCS index	Channel	Maximum Tune Up Tolerance (dBm)
IEEE 802.11b	1 Mbps	1	16.0± 2.0
		2	17.0± 2.0
		3	17.0± 2.0
		6	18.0± 2.0
		9	18.0± 2.0
		10	16.0± 2.0
		11	15.0± 2.0
IEEE 802.11g	6 Mbps	1	12.0± 2.0
		2	14.0± 2.0
		3	15.0± 2.0
		4	15.0± 2.0
		5	16.0± 2.0
		6	18.0± 2.0
		7	15.0± 2.0
		8	15.0± 2.0
		9	15.0± 2.0
		10	12.0± 2.0
		11	10.0± 2.0
IEEE 802.11n (HT20)	MCS0	1	12.0± 2.0
		2	13.0± 2.0
		3	15.0± 2.0
		4	18.0± 2.0
		6	18.0± 2.0
		7	18.0± 2.0
		8	17.0± 2.0
		9	15.0± 2.0
		10	13.0± 2.0

Mode	Rate/MCS index	Channel	Maximum Tune Up Tolerance (dBm)
		11	10.0± 2.0

Table 7: WLAN RF Power Setting - 2.4 GHz 802.11ax (HE20) (FCC)

Mode	Channel	Rate / MCS index	SU	Maximum Tune Up Tolerance (dBm)	RU	Maximum Tune Up Tolerance (dBm)
IEEE 802.11ax (HE20)	1	MCS0	SU	11.0± 2.0		
			RU			12.0± 2.0
					26/0	12.0± 2.0
					26/8	12.0± 2.0
					52/37	11.0± 2.0
					52/40	12.0± 2.0
					106/53	13.0± 2.0
					106/54	14.0± 2.0
	2	MCS0	RU		242 tone (Full tone)	13.0± 2.0
	3	MCS0	RU		242 tone (Full tone)	14.0± 2.0
	4	MCS0	RU		242 tone (Full tone)	15.0± 2.0
	5	MCS0	RU		242 tone (Full tone)	16.0± 2.0
	6	MCS0	SU	18.0± 2.0		
			RU		242 tone (Full tone)	18.0± 2.0
	7	MCS0	RU		242 tone (Full tone)	16.0± 2.0
	8	MCS0	RU		242 tone (Full tone)	15.0± 2.0
	9	MCS0	RU		242 tone (Full tone)	14.0± 2.0
	10	MCS0	RU		242 tone (Full tone)	12.0± 2.0
	11	MCS0	SU	11.0± 2.0		
			RU			11.0± 2.0
					26/8	12.0± 2.0
					26/0	12.0± 2.0
					52/40	12.0± 2.0
					52/37	13.0± 2.0
					106/54	12.0± 2.0
					106/53	13.0± 2.0

2.1.4.2 RF Power Setting for BLE / IEEE 802.15.4

RF power settings for BT (BR/EDR), BLE and IEEE 802.15.4 are described in the following tables.

Table 8: BLE / IEEE 802.15.4 RF Power Setting (FCC)

Mode	Channel	Maximum Tune Up Tolerance (dBm)
BLE	NA	12.0± 2.0
BLE 2 Mbps	NA	12.0± 2.0
IEEE 802.15.4	11 ~ 25	19.0± 2.0
	26	3.0± 2.0

2.1.4.3 RF Power Setting for 5 GHz WLAN

RF power settings for 5 GHz WLAN are described in the following tables.

Table 9: WLAN RF Power Setting - 5 GHz 802.11a (FCC)

Mode	Rate	Band	Channel	Maximum Tune Up Tolerance (dBm)
IEEE 802.11a	6 Mbps		36	13.0± 2.0
	6 Mbps		44	16.0± 2.0
	6 Mbps		48	16.0± 2.0
	6 Mbps		52	16.0± 2.0
	6 Mbps		60	16.0± 2.0
	6 Mbps		64	13.0± 2.0
	6 Mbps		100	16.0± 2.0
	6 Mbps		116	16.0± 2.0
	6 Mbps		140	16.0± 2.0
	6 Mbps		144	15.0± 2.0
	6 Mbps		149	16.0± 2.0
	6 Mbps		157	16.0± 2.0
	6 Mbps		165	16.0± 2.0
	6 Mbps		169	16.0± 2.0
	6 Mbps		173	16.0± 2.0
	6 Mbps		177	16.0± 2.0

Table 10: WLAN RF Power Setting - 5 GHz 802.11n (HT20) (FCC)

Mode	MCS Index	Band	Channel	Maximum Tune Up Tolerance (dBm)
IEEE 802.11n (HT20)	MCS0		36	13.0± 2.0
	MCS0		44	16.0± 2.0
	MCS0		48	16.0± 2.0
	MCS0		52	18.0± 2.0
	MCS0		60	18.0± 2.0
	MCS0		64	13.0± 2.0
	MCS0		100	15.0± 2.0
	MCS0		116	18.0± 2.0
	MCS0		140	14.0± 2.0
	MCS0		144	18.0± 2.0
	MCS0		149	18.0± 2.0

Mode	MCS Index	Band	Channel	Maximum Tune Up Tolerance (dBm)
	MCS0		157	18.0± 2.0
	MCS0		165	18.0± 2.0
	MCS0		169	18.0± 2.0
	MCS0		173	18.0± 2.0
	MCS0		177	18.0± 2.0

Table 11: WLAN RF Power Setting - 5 GHz 802.11ac (VHT20) (FCC)

Mode	MCS Index	Band	Channel	Maximum Tune Up Tolerance (dBm)
IEEE 802.11ac (VHT20)	MCS0		36	13.0± 2.0
	MCS0		44	16.0± 2.0
	MCS0		48	16.0± 2.0
	MCS0		52	18.0± 2.0
	MCS0		60	18.0± 2.0
	MCS0		64	13.0± 2.0
	MCS0		100	15.0± 2.0
	MCS0		116	18.0± 2.0
	MCS0		140	14.0± 2.0
	MCS0		144	18.0± 2.0
	MCS0		149	18.0± 2.0
	MCS0		157	18.0± 2.0
	MCS0		165	18.0± 2.0
	MCS0		169	18.0± 2.0
	MCS0		173	18.0± 2.0
	MCS0		177	18.0± 2.0

Table 12: WLAN RF Power Setting – 5 GHz 802.11ax (HE20) (FCC)

Mode	Channel	MCS Index	Band	SU	Maximum Tune Up Tolerance (dBm)	RU	Maximum Tune Up Tolerance (dBm)
IEEE 802.11ax (HE20)	36	VHT0		SU	13.0± 2.0		
				RU			12.0± 2.0
						26/0	7.0± 2.0
						26/8	7.0± 2.0
						52/37	10.0± 2.0
						52/40	8.0± 2.0
						106/53	12.0± 2.0
						106/54	11.0± 2.0
	44	VHT0		SU	16.0± 2.0		
				RU			16.0± 2.0
	48	VHT0		SU	17.0± 2.0		
				RU			16.0± 2.0
	52	VHT0		SU	18.0± 2.0		
				RU			18.0± 2.0

Mode	Channel	MCS Index	Band	SU	Maximum Tune Up Tolerance (dBm)	RU	Maximum Tune Up Tolerance (dBm)
	60	VHT0		SU	18.0± 2.0		
				RU			18.0± 2.0
	64	VHT0		SU	12.0± 2.0		
				RU			12.0± 2.0
						26/8	7.0± 2.0
						26/0	13.0± 2.0
						52/40	14.0± 2.0
						52/37	10.0± 2.0
						106/54	18.0± 2.0
						106/53	18.0± 2.0
	100	VHT0		SU	10.0± 2.0		
				RU			17.0± 2.0
						26/8	12.0± 2.0
						26/0	12.0± 2.0
						52/40	14.0± 2.0
						52/37	13.0± 2.0
						106/54	13.0± 2.0
						106/53	15.0± 2.0
	116	VHT0		SU	18.0± 2.0		
				RU			18.0± 2.0
	140	VHT0		SU	12.0± 2.0		
				RU			13.0± 2.0
						26/8	11.0± 2.0
						26/0	7.0± 2.0
						52/40	12.0± 2.0
						52/37	12.0± 2.0
						106/54	12.0± 2.0
						106/53	12.0± 2.0
	144	VHT0		SU	18.0± 2.0		
				RU			18.0± 2.0
	149	VHT0		SU	18.0± 2.0		
				RU			18.0± 2.0
						26/8	18.0± 2.0
						26/0	18.0± 2.0
						52/40	18.0± 2.0
						52/37	18.0± 2.0
						106/54	18.0± 2.0
						106/53	18.0± 2.0
	157	VHT0		SU	18.0± 2.0		
				RU			18.0± 2.0
	165	VHT0		SU	18.0± 2.0		
				RU			18.0± 2.0
						26/8	18.0± 2.0

Mode	Channel	MCS Index	Band	SU	Maximum Tune Up Tolerance (dBm)	RU	Maximum Tune Up Tolerance (dBm)
						26/0	18.0± 2.0
						52/40	18.0± 2.0
						52/37	18.0± 2.0
						106/54	18.0± 2.0
						106/53	18.0± 2.0
	169	VHT0		SU	17.0± 2.0		
				RU			18.0± 2.0
						26/8	18.0± 2.0
						26/0	16.0± 2.0
						52/40	18.0± 2.0
						52/37	18.0± 2.0
						106/54	18.0± 2.0
						106/53	18.0± 2.0
	173	VHT0		SU	18.0± 2.0		
				RU			18.0± 2.0
	177	VHT0		SU	10.0± 2.0		
				RU			14.0± 2.0
						26/8	1.0± 2.0
						26/0	16.0± 2.0
						52/40	4.0± 2.0
						52/37	18.0± 2.0
						106/54	6.0± 2.0
						106/53	18.0± 2.0

2.1.5 Scanning and Ad Hoc Connection modes

Table 13 below describes the Scanning and Ad Hoc connection capabilities of each mode.

Table 13: Scanning and Ad Hoc Connection Capabilities (FCC)

Frequency of Operation			Scan	Ad hoc Mode
2.4 GHz	11b/g/n/ac/ax (BW20)	2412-2462 MHz	Active	Yes
	BLE	2402-2480 MHz	N/A	N/A
	IEEE 802.15.4	2405-2480 MHz	N/A	N/A
W52	11a/n/ac/ax (BW20)	5180-5240 MHz	Active	Yes
W53	11a/n/ac/ax (BW20)	5260-5320 MHz	Passive	No
W56	11a/n/ac/ax (BW20)	5500-5720 MHz[1]	Passive	No
W58	11a/n/ac/ax (BW20)	5745-5825 MHz	Active	Yes

2.1.6 Integration Instructions

This manual is based on KDB 996369. It is designed to ensure that module manufacturers correctly communicate the necessary information to host manufacturers that incorporate their modules.

1. General: Applicable

Sections 2 through 10 describe the items that must be provided in the integration instructions for host product manufacturers (e.g., OEM instruction manual) to use when integrating a module in a host product. This Modular transmitter applicant (Murata) should include information in their instructions for all these items indicating clearly when they are not applicable.

2. List of Applicable FCC Rules: Applicable

This device complies with below part 15 of FCC Rules.

- Part 15 Subpart C
- Part 15 Subpart E

3. Summarize the specific operational use conditions: Applicable

This module is designed for mounting inside of the end product by us professionally. Therefore, it complies with the antenna and transmission system requirements of §15.203.

4. Limited Module Procedures: Applicable

This module needs to supply a regulated voltage from host device.

Since there is no space which indicates FCC ID on this module, FCC ID is indicated in a manual. If the FCC ID is not visible when the module is installed inside another device, then the module is installed must also display a label referring to the enclosed module.

5. Trace Antenna Designs: Applicable

[1] DFS MASTER function not available.

Please perform the Trace antenna design that followed the specifications of the antenna.
The concrete contents of a check are the following three points.

1. It is the same type as the antenna type of antenna specifications.
   Confirm the same size as the Gerber file.
2. An antenna gain is lower than a gain given in antenna specifications.
   Measure the gain, and confirm the peak gain is less than the application value.
3. The emission level is not getting worse.
   Measure the spurious and confirm degradation of less than 3dB than spurious value of worst of report used for the application. However it is spurious defined below.

Please send those reports to Murata. And please refer to the Antenna in Section 2.1.6.7.

6. RF Exposure Considerations: Applicable

This equipment complies with FCC radiation exposure limits set forth for an uncontrolled environment and meets the FCC radio frequency (RF) Exposure Guidelines. This equipment should be installed and operated keeping the radiator at least 20 cm or more away from person's body.

It is necessary to take a SAR test with your set mounting this module (except to use only Bluetooth). Class II permissive change application is necessary using the SAR report. Please contact Murata. And an application for a Class II permissive change from a Mobile equipment to a Portable equipment is also required.

1. **Portable equipment:** Equipment for which the spaces between human body and antenna are used within 20 cm.
2. **Mobile equipment:** Equipment used at position in which the spaces between human body and antenna exceeded 20 cm.

7. Antennas: Applicable

Table 14: Antennas (FCC)

No.	Part number	Vendor	Peak Gain [dBi]		Type	Connector
			2.4 GHz	5 GHz		
1	146153 (50mm)	Molex	3.2	4.25	Dipole	u.FL
2	219611 (50mm)	Molex	2.67	3.67	Dipole	u.FL
3	WT32D1-KX	Unictron	3.0	4.0	Dipole	u.FL
4	W24P-U	Inventek	3.2	N/A	Dipole	u.FL
5	Type 2FR	Murata	2.6	3.6	Monopole	PCB Trace
6	Type 2BP-QN9090	Murata	0.2	N/A	Monopole	PCB Trace

No. 4 W24P-U can only be used at 2.4 GHz
No. 5 Type 2FR Antenna can only be used for ANT0 (Antenna port 0)
No. 6 Type 2BP-QN9090 can only be used for ANT0 (Antenna port 0)
No. 6 Type 2BP-QN9090 can only be used at 2.4 GHz.

8. Label and Compliance Information: Applicable

The following statements must be described on the user manual of the host device of this module:

Contains Transmitter Module FCC ID: HSW2FR	OR	Contains FCC ID: HSW2FR

This device complies with part 15 of the FCC Rules. Operation is subject to the following two conditions: (1) This device may not cause harmful interference, and (2) this device must accept any interference received, including interference that may cause undesired operation.

If it is difficult to describe this statement on the host product due to the size, please describe in the User's manual.

FCC CAUTION

Changes or modifications not expressly approved by the party responsible for compliance could void the user's authority to operate the equipment.

Compliance with FCC requirement 15.407(c)

Data transmission is always initiated by software, which is passed down through the MAC, through the digital and analog baseband, and finally to the RF chip. Several special packets are initiated by the MAC. These are the only ways the digital baseband portion will turn on the RF transmitter, which then turns off at the end of the packet. Therefore, the transmitter will be on only while one of the aforementioned packets is being transmitted. In other words, this device automatically discontinue transmission in case of either absence of information to transmit or operational failure.

Frequency Tolerance: ±20 ppm

When installing it in mobile equipment, please describe the following warning to the manual.

This equipment complies with FCC radiation exposure limits set forth for an uncontrolled environment and meets the FCC radio frequency (RF) Exposure Guidelines. This equipment should be installed and operated keeping the radiator at least 20cm or more away from person's body.

This module is only approved as mobile equipment. Therefore, do not install it on portable equipment.

If you wish to use it as a portable equipment, please contact Murata in advance as Class II application accompanied by SAR testing using the final product are required.

9. Information On Test Modes and Additional Testing Requirements: Applicable

Please check the installation manual first. Please contact Murata if you have any questions when conducting the RF certification test on the host. We (Murata) are ready to present the control manual and others for the RF certification test.

10. Additional Testing, Part 15 Subpart B Disclaimer: Applicable

The modular transmitter is only FCC authorized for the specific rule parts (i.e., FCC transmitter rules) listed on the grant, and the host product manufacturer is responsible for compliance to any other FCC rules that apply to the host not covered by the modular transmitter grant of certification.

The final host product still requires Part 15 Subpart B compliance testing with the modular transmitter installed.

If the final product with this module is FCC Class A digital device, include the following in the manual of the final product.

Note: This equipment has been tested and found to comply with the limits for a Class A digital device, pursuant to part 15 of the FCC Rules. These limits are designed to provide reasonable protection against harmful interference when the equipment is operated in a commercial environment. This equipment generates, uses, and can radiate radio frequency energy and, if not installed and used in accordance with the instruction manual, may cause harmful interference to radio communications. Operation of this equipment in a residential area is likely to cause harmful interference in which case the user will be required to correct the interference at his own expense.

If the final product with this module is FCC Class B digital device, include the following in the manual of the final product.

Note: This equipment has been tested and found to comply with the limits for a Class B digital device, pursuant to part 15 of the FCC Rules. These limits are designed to provide reasonable protection against harmful interference in a residential installation. This equipment generates, uses, and can radiate radio frequency energy and, if not installed and used in accordance with the instructions, may cause harmful interference to radio communications. However, there is no guarantee that interference will not occur in a particular installation. If this equipment does cause harmful interference to radio or television reception, which can be determined by turning the equipment off and on, the user is encouraged to try to correct the interference by one or more of the following measures:

- Reorient or relocate the receiving antenna.
- Increase the separation between the equipment and receiver.
- Connect the equipment into an outlet on a circuit different from that to which the receiver is connected.
- Consult the dealer or an experienced radio/TV technician for help.

11. Note on EMI Considerations: Applicable

A host manufacture is recommended to use KDB 996369 D04 Module Integration Guide recommending as "best practice" RF design engineering testing and evaluation in case non-linear interactions generate additional non-compliant limits due to module placement to host components or properties.

For standalone mode, reference the guidance in D04 Module Integration Guide and for simultaneous mode7; see D02 Module Q&A Question 12, which permits the host manufacturer to confirm compliance.

12. How to Make Changes: Applicable

When changing from the conditions of approval, please present technical documentation that it is equivalent to a Class I change. For example, when adding or changing an antenna, the following technical documents are required.

1. The document indicating the same type as the original antenna.
2. Technical document showing that the gain is the same or lower than the gain at the time of the original approval.
3. Technical document showing that the spurious is no more than 3 dB worse than when it was originally certified.

2.1.7 About Power Supply (Limited Condition)

This Module (LBES0ZZ2FR and LBES0ZZ2FP) has been approved as Limited Modular Approval. These modules do not have a voltage stabilizing circuit in the power path to the internal RF circuitry. Therefore, the Limited Condition must provide a stable power supply for the supply voltage to the module. Please supply a stable power supply so that the voltage shown in **Table 5.**

2.1.8 Trace Antenna and Feed Line

2.1.8.1 Signal Line Between an Antenna and a Module

It is a 50 Ω line design. Fine tuning of return loss etc. can be performed using a matching network. However, it is required to check "Class1 change" and "Class2 change" which the authorities define then.

The concrete contents of a check are the following three points.

1. It is the same type as the antenna type of antenna specifications.
2. An antenna gain is lower than a gain given in antenna specifications.
3. The emission level is not getting worse.

50 Ω line (microstrip line length) and Trace Antenna (Type 2FR_Antenna) are used as the design of the EVB used for the test. **Figure 5** shows the pattern used in the certification test.

Figure 5: EVB Design Used for Testing

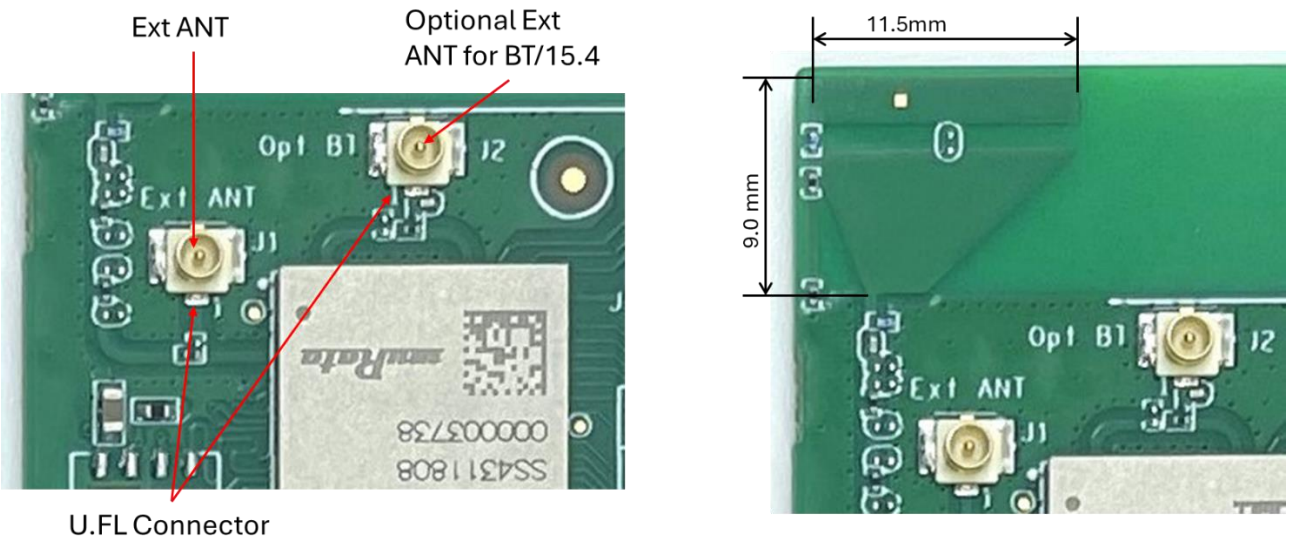

The 50 Ω microstrip line and Type 2FR_Antenna needs to be copied when module is installed in the End product.

> Murata provides set makers with Gerber data or something similar.

2.1.8.2 Trace Antenna and Feed Line of The Jig Where the Certification Test is Conducted

- Substrate type name of certification test jig: **P2ML10229**
- Feed line width: **0.4 mm**
- Substrate material: **FR-4**
- Substrate thickness between GND layer and surface layer: **0.235 mm**

Figure 6: Trace Antenna and Feed Line of The Jig

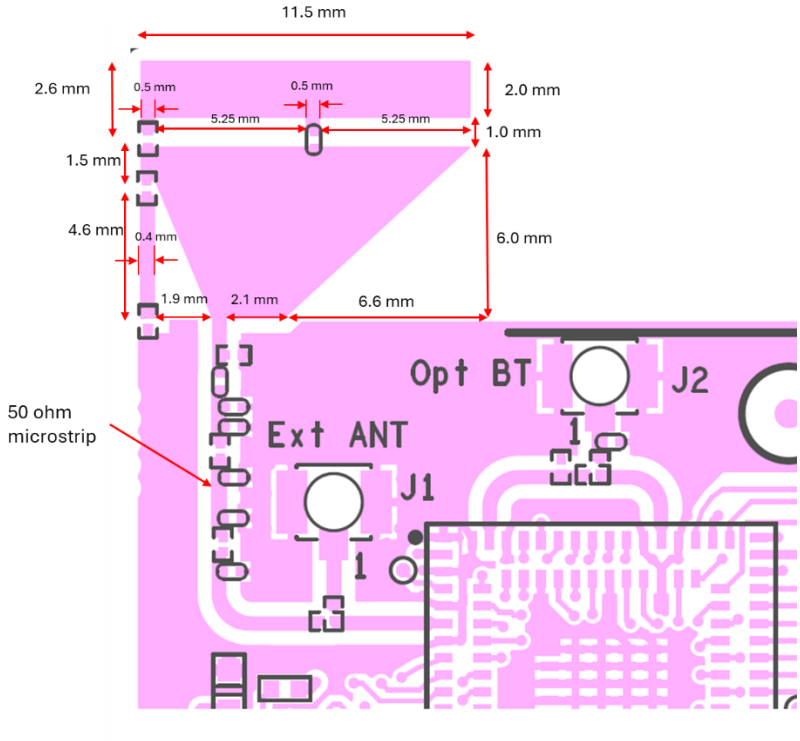

Figure 6: Trace Antenna and Feed Line of The Jigabove shows the Trace Antenna and the Feed Line drawing. Please refer to **Figure 9**: Microstrip RF Trace Structure for the detail of the 50 ohm microstrip RF trace structure.

2.1.9 Layout Guidance for Microstrip Design and External Antenna

The LBES0ZZ2FR module is certified with a PCB antenna (Type 2FR_Antenna) and with four external antennae.

The following precautions should be taken when using this PCB antenna (Type 2FR_Antenna)

- Type 2FR_Antenna can only be used for port_ANT0 side.
- When the module is installed in the final product, the 50 Ω microstrip line and Type 2FR_Antenna, outlined in right red in **Figure 7**, must be copied to the state shown in **Figure 8** where it was certified.
- Port_ANT1 can use the following four antennas when it is in Dedicated Usage.
  - 146153, 219611, WT32D1-KX, W24P-U

Murata provides set makers with Gerber data or something similar.

Figure 7: 50 Ω microstrip line and Type 2FR_Antenna

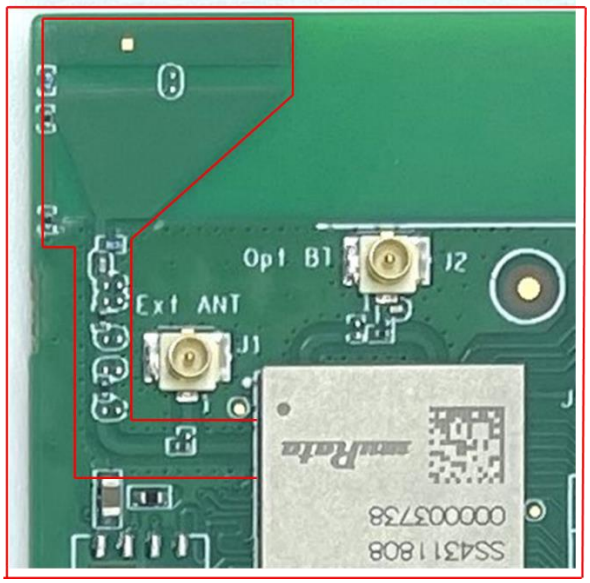

Figure 8: Trace antenna (Type 2FR_Antenna) Layout Guide

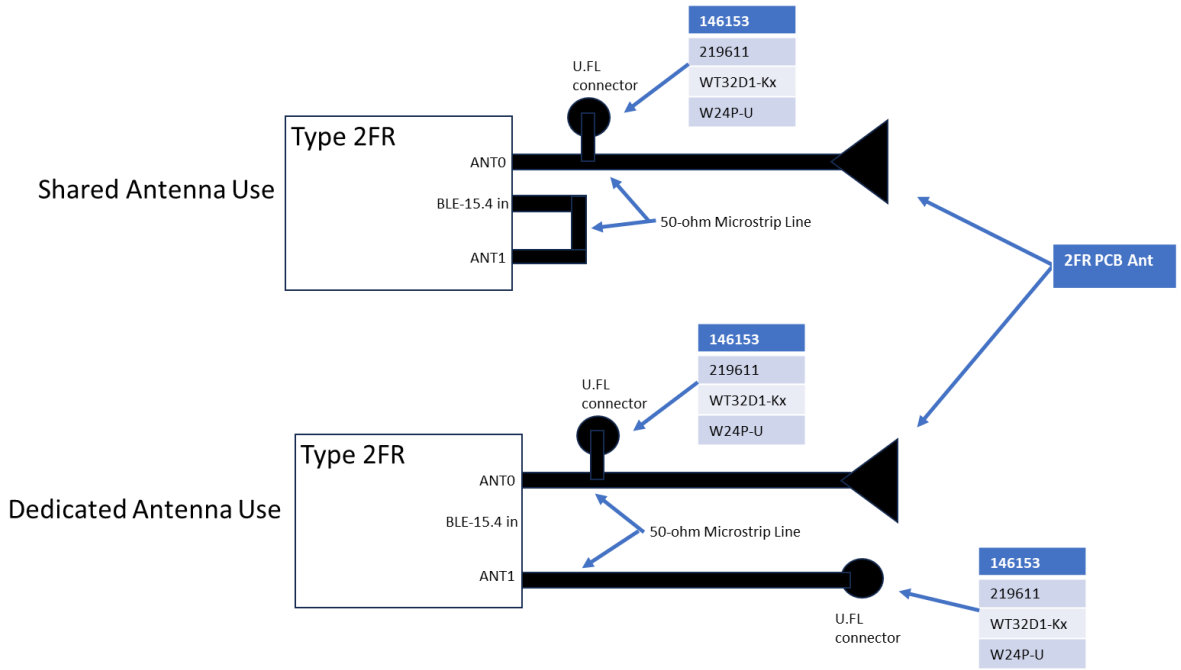

The external antenna should be connected to the LBES0ZZ2FR module using 50 Ω microstrip RF trace and a u.FL RF connector as described below.

- The microstrip RF trace and u.FL connector are placed on the customer‘s PCB and are external to the LBES0ZZ2FR module.
- The antenna is then connected to this u.FL Connector via a 50 Ω RF adapter cable.
- The design of the 50 Ω microstrip RF trace on the customer’s PCB is crucially important.

mpliant operation of the LBES0ZZ2FR module is dependent on proper construction of this 50 Ω line and the owing guidelines must be followed to ensure legal operation of the product.

Figure 8: Trace antenna (Type 2FR_Antenna) Layout Guide shows the required microstrip structure to be routed between module pin and the u.FL connector.

The top PCB trace carries the RF energy from module to u.FL connector.

50 Ω microstrip RF trace: Murata provides set makers with Gerber data or something similar.

As shown in **Figure 9**, the Layer2 ground plane provides a return path for the circuit. The Dielectric material (along with the dimensions of the microstrip structures) determines the characteristic impedance of the microstrip transmission line.

Figure 9: Microstrip RF Trace Structure

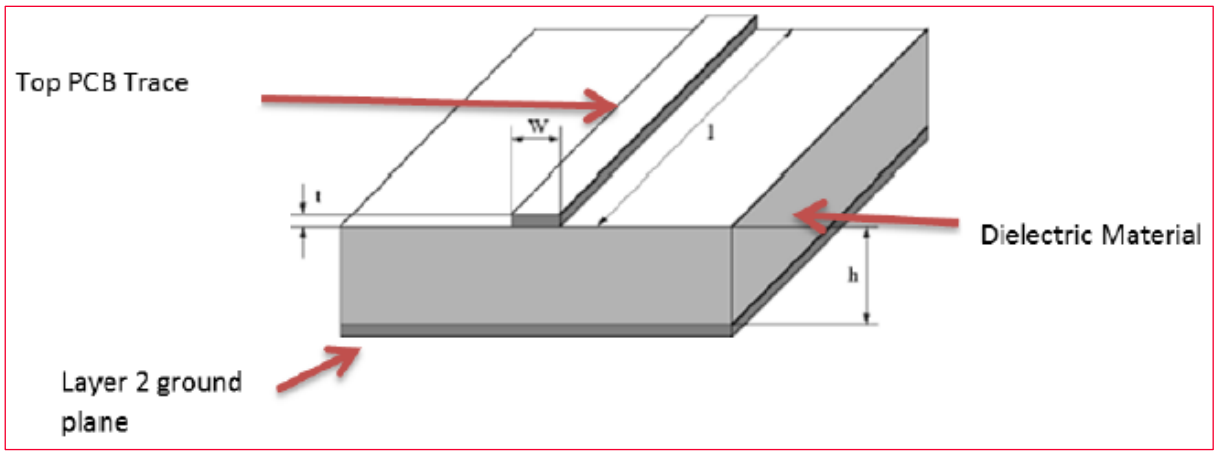

Note the representative dimensions shown in the drawing above. It is imperative that the module customer (the integrator) use the exact dimensions we recommend ensuring a 50 Ω impedance for this transmission line.

The following dimensions and/or ratios should be used to set the microstrip impedance to 50 Ω:

- Dielectric (PCB) Material: We recommend standard FR4 PCB material. Other dielectrics will work but will require recalculation of microstrip dimensions.

  The following guidance is predicated on the use of FR4 Dielectric:

  - If FR4 is not used for PCB material, please contact Murata to determine new dimensions for microstrip structure.

- **h** (Dielectric Height) - this is the thickness of dielectric between the trace layer (layer 1) and the ground plane on layer 2.

  Note that layer 2 must be electrical ground. We recommend a dielectric thickness of 8-15 mils. This range provides the customer with some flexibility in board construction.

- **t** (**trace thickness**): Microstrip impedance is not severely affected by the thickness dimension. Standard 102 or 202 copper deposition is recommended. Equivalent thickness is 1-2 mils.
- **W** (**trace width**): this is the crucial dimension. This width must be set correctly to obtain the desired 50 Ω impedance.

  When using FR-4 dielectric, the width (W) of the microstrip trace should be set to: W = H* 1.8, where W is microstrip trace width and H is Dielectric height. Note that both values must be measured in identical units (mils or mm).

  Example:

  H = 12 mils, W =12 * 1.8 = 21.6 mils

  H = 0.4 mm, W = 0.4*1.8 = 0.72 mm
- **l (trace length):** the impedance of the microstrip line is not dependent on its length. However, regulatory and performance limitations practically determine the actual length to be used by the customer (integrator).

	The length of this microstrip line must be longer than 7 mm to mimic the length used during FCC/ISED certification of the LBES0ZZ2FR module. Lengths longer than 7 mm are acceptable although additional signal loss will occur as a result.

Given these restrictions, Murata recommends microstrip trace lengths between 7 mm and 25 mm.

In any event, the microstrip line must operate over the same Dielectric-Ground Plane configuration shown above to act as a 50 Ω transmission line.

	Do not run the microstrip trace through sections of PCB that do not have the Dielectric-Ground plane configuration shown above.

A reliable 50-ohm transmission line will be produced if the above guidance is closely followed.

	Any deviations from the guidance above may cause the module to operate in noncompliant manner.

Any implementation questions or concerns should be directed to Murata module technical support.

2.2 ISED

PMN: Type 2FR	**HVIN:** LBES0ZZ2FR	**IC:** 4492A-2FR

This device contains license-exempt transmitter(s)/receiver(s) that comply with Innovation, Science and Economic Development Canada's license-exempt RSS(s). Operation is subject to the following two conditions:

1. This device may not cause interference.
2. This device must accept any interference, including interference that may cause undesired operation of the device.

English Version For indoor use only (5150-5250 MHz band and channel 52, 54, 58).
French Version Pour usage intérieur seulement (5150-5250 MHz band and channel 52, 54, 58)

English Version Data transmission is always initiated by software, which is then passed down through the MAC, through the digital and analog baseband, and finally to the RF chip. Several special packets are initiated by the MAC. These are the only ways the digital baseband portion will turn on the RF transmitter, which then turns off at the end of the packet. Therefore, the transmitter will be on only while one of the aforementioned packets is being transmitted. In other words, this device automatically discontinue transmission in case of either absence of information to transmit or operational failure.
French Version La transmission des données est toujours initiée par le logiciel, puis les données sont transmises par l'intermédiaire du MAC, par la bande de base numérique et analogique et, enfin, à la puce RF. Plusieurs paquets spéciaux sont initiés par le MAC. Ce sont les seuls moyens pour qu'une partie de la bande de base numérique active l'émetteur RF, puis désactive celui-ci à la fin du paquet. En conséquence, l'émetteur reste uniquement activé lors de la transmission d'un des paquets susmentionnés. En d'autres termes, ce dispositif interrompt automatiquement toute transmission en cas d'absence d'information à transmettre ou de défaillance.

English Version This radio transmitter (IC: 4492A-2FR) has been approved by Innovation, Science and Economic Development Canada to operate with the antenna types listed below, with the maximum permissible gain indicated. Antenna types not included in this list that have a gain greater than the maximum gain indicated for any type listed are strictly prohibited for use with this device.
French Version Le présent émetteur radio (IC: 4492A-2FR) a été approuvé par Innovation, Sciences et Développement économique Canada pour fonctionner avec les types d'antenne énumérés ci-dessous et ayant un gain admissible maximal. Les types d'antenne non inclus dans cette liste, et dont le gain est supérieur au gain maximal indiqué pour

English Version When installing it in mobile equipment: This equipment complies with IC radiation exposure limits set forth for an uncontrolled environment and meets RSS-102 of the IC radio frequency (RF) Exposure rules. This equipment should be installed and operated by keeping the radiator at least 20 cm or more away from person’s body.
French Version Cet équipement est conforme aux limites d’exposition aux rayonnements énoncées pour un environnement non contrôlé et respecte les règles d’exposition aux fréquences radioélectriques (RF) CNR-102 de l’IC. Cet équipement doit être installé et utilisé en gardant une distance de 20 cm ou plus entre le radiateur et le corps humain.

When installing it in a portable equipment:

It is necessary to take a SAR test with your set mounting this module.

Class 4 permissive change application is necessary using the SAR report.

Please contact Murata.

- **Portable equipment:** Equipment for which the spaces between human body and antenna are used within 20 cm.
- **Mobile equipment:** Equipment used at position in which the spaces between human body and antenna exceeded 20 cm.

2.2.1 Antenna List

English Version This radio transmitter (4492A-2FR) has been approved by Innovation, Science and Economic Development Canada to operate with the antenna types listed below, with the maximum permissible gain indicated. Antenna types not included in this list that have a gain greater than the maximum gain indicated for any type listed are strictly prohibited for use with this device. Dipole Antenna Gain: 3.2 dBi @ 2.4 GHz, 4.25 dBi @ 5 GHz Dipole Antenna Gain: 2.67 dBi @ 2.4 GHz, 3.67 dBi @ 5 GHz Dipole Antenna Gain: 3.0 dBi @ 2.4 GHz, 4.0 dBi @ 5 GHz Dipole Antenna Gain: 3.2 dBi @ 2.4 GHz Monopole Antenna Gain: 2.6 dBi @ 2.4 GHz, 3.6 dBi @ 5GHz Monopole Antenna Gain: 0.2 dBi @ 2.4 GHz
French Version Le présent émetteur radio (4492A-2FR) a été approuvé par Innovation, Sciences et Développement économique Canada pour fonctionner avec les types d'antenne énumérés ci dessous et ayant un gain admissible maximal. Les types d'antenne non inclus dans cette liste, et dont le gain est supérieur au gain maximal indiqué pour tout type figurant sur la liste, sont strictement interdits pour l'exploitation de l'émetteur. Dipole Antenna Gain: 3.2 dBi @ 2.4 GHz, 4.25 dBi @ 5 GHz Dipole Antenna Gain: 2.67 dBi @ 2.4 GHz, 3.67 dBi @ 5 GHz Dipole Antenna Gain: 3.0 dBi @ 2.4 GHz, 4.0 dBi @ 5 GHz Dipole Antenna Gain: 3.2 dBi @ 2.4 GHz Monopole Antenna Gain: 2.6 dBi @ 2.4 GHz, 3.6 dBi @ 5GHz Monopole Antenna Gain: 0.2 dBi @ 2.4 GHz

2.2.2 Marking and Dimensions

Refer to section 1.2.

2.2.3 Pin Layout

Refer to section 2.1.2.

2.2.4 Operating Conditions

Refer to section 2.1.3.

2.2.5 RF Power Setting

The ISED power setting is the same as the FCC power setting. Please refer to section 2.1.4.

2.2.6 Scanning and Ad Hoc Connection Modes

Table 15 below describes the Scanning and Ad Hoc Connection capabilities of each mode.

Table 15: Scanning and Ad Hoc Connection Capabilities (ISED)

Frequency of Operation			Scan	Ad hoc Mode
2.4 GHz	11b/g/n/ac/ax (BW20)	2412-2462 MHz	Active	Yes
	BLE	2402-2480 MHz	N/A	N/A
	IEEE802.15.4	2405-2480 MHz	N/A	N/A
W52	11a/n/ac/ax (BW20)	5180-5240 MHz	Active	Yes
W53	11a/n/ac/ax (BW20)	5260-5320 MHz	Passive	No
W56	11a/n/ac/ax (BW20)	5500-5720 MHz[2]	Passive	No
W58	11a/n/ac/ax (BW20)	5745-5825 MHz	Active	Yes

Since this module is not sold to general end users directly, there is no user manual of module. For the details about this module, please refer to the specification sheet of module.
This module should be installed in the host device according to the interface specification (installation procedure).

The OEM integrator has to be aware not to provide information to the end user regarding how to install or remove this RF module in the end user's manual of the end product which integrates this module.

The end user manual shall include all required regulatory information/warning as shown in User manual.

- The following information must be indicated on the host device of this module.

  Contains IC: 4492A-2FR

- In the case of the final product which can be carried around to outdoors. The following indication is necessary for the final product.
  - When the STA function is used in channel 52, 54, or 58.

    At the time of the channel 52, 54 or 58 setting, please indicate "for indoor use only channel". During connecting, please show the channel number which connects. And please indicate that the end user may find out "for indoor use only channel".
- If the final product uses the following frequency, please note that there is a limit.

[2] * The frequency band 5600MHz-5640MHz (11a/n 20M band), 5590MHz-5630MHz (11n/ac/ax 40M band) and 5610MHz(11ac/ax 80M band) is restricted in ISED.
* DFS MASTER function not available.
* DFS client function available.
* There is a TPC function.

English Version For indoor use only (5150-5250 MHz band and channel 52, 54, 58).
French Version Pour usage intérieur seulement (5150-5250 MHz band and channel 52, 54, 58)

English Version Data transmission is always initiated by software, which is then passed down through the MAC, through the digital and analog baseband, and finally to the RF chip. Several special packets are initiated by the MAC. These are the only ways the digital baseband portion will turn on the RF transmitter, which it then turns off at the end of the packet. Therefore, the transmitter will be on only while one of the aforementioned packets is being transmitted. In other words, this device automatically discontinues transmission in case of either absence of information to transmit or operational failure.
French Version La transmission des données est toujours initiée par le logiciel, puis les données sont transmises par l'intermédiaire du MAC, par la bande de base numérique et analogique et, enfin, à la puce RF. Plusieurs paquets spéciaux sont initiés par le MAC. Ce sont les seuls moyens pour qu'une partie de la bande de base numérique active l'émetteur RF, puis désactive celui-ci à la fin du paquet. En conséquence, l'émetteur reste uniquement activé lors de la transmission d'un des paquets susmentionnés. En d'autres termes, ce dispositif interrompt automatiquement toute transmission en cas d'absence d'information à transmettre ou de défaillance.

English Version This radio transmitter (IC: 4492A-2FR) has been approved by Innovation, Science and Economic Development Canada to operate with the antenna types listed below, with the maximum permissible gain indicated. Antenna types not included in this list that have a gain greater than the maximum gain indicated for any type listed are strictly prohibited for use with this device.
French Version Le présent émetteur radio (IC: 4492A-2FR) a été approuvé par Innovation, Sciences et Développement économique Canada pour fonctionner avec les types d'antenne énumérés ci dessous et ayant un gain admissible maximal. Les types d'antenne non inclus dans cette liste, et dont le gain est supérieur au gain maximal indiqué pour

- The following statements must be described on the user manual of the host device of this module:

English Version This device contains license-exempt transmitter(s)/receiver(s) that comply with Innovation, Science and Economic Development Canada's licence-exempt RSS(s). Operation is subject to the following two conditions: 1. This device may not cause interference. 2. This device must accept any interference, including interference that may cause undesired operation of the device.
French Version L'émetteur/récepteur exempt de licence contenu dans le présent appareil est conforme aux CNR d'Innovation, Sciences et Développement économique Canada applicables aux appareils radio exempts de licence. L'exploitation est autorisée aux deux conditions suivantes : 1. L'appareil ne doit pas produire de brouillage. 2. L'appareil doit accepter tout brouillage radioélectrique subi, même si le brouillage est susceptible d'en compromettre le fonctionnement.

- When installing it in a mobile equipment:

English Version This equipment complies with ISED radiation exposure limits set forth for an uncontrolled environment and meets RSS-102 of the IC radio frequency (RF) Exposure rules. This equipment should be installed and operated by keeping the radiator at least 20cm or more away from a person's body.
French Version Cet équipement est conforme aux limites d'exposition aux rayonnements énoncées pour un environnement non contrôlé et respecte les règles d'exposition aux fréquences radioélectriques (RF) CNR-102 de l'ISED. Cet équipement doit être installé et utilisé en gardant une distance de 20 cm ou plus entre le radiateur et le corps humain.

- When installing it in a portable equipment:

  It is necessary to take a SAR test with your set mounting this module.
  Class 4 permissive change application is necessary using the SAR report.
  Please contact Murata.

- **Portable equipment:** Equipment for which the spaces between human body and antenna are used within 20cm.
- **Mobile equipment:** Equipment used at position in which the spaces between human body and antenna exceeded 20cm.

- If the antenna of the end product is removed, please describe the following warning on the manual of the end product which contains this module.

English Version

This radio transmitter (4492A-2FR) has been approved by Innovation, the Science and Economic Development Canada to operate with the antenna types listed below, with the maximum permissible gain indicated.

Antenna types not included in this list that have a gain greater than the maximum gain indicated for any type listed are strictly prohibited for use with this device.

Dipole Antenna Gain: 3.2 dBi @ 2.4 GHz, 4.25 dBi @ 5 GHz
Dipole Antenna Gain: 2.67 dBi @ 2.4 GHz, 3.67 dBi @ 5 GHz
Dipole Antenna Gain: 3.0 dBi @ 2.4 GHz, 4.0 dBi @ 5 GHz
Dipole Antenna Gain: 3.2 dBi @ 2.4 GHz
Monopole Antenna Gain: 2.6 dBi @ 2.4 GHz, 3.6 dBi @ 5GHz
Monopole Antenna Gain: 0.2 dBi @ 2.4 GHz

French Version

Le présent émetteur radio (4492A-2FR) a été approuvé par Innovation, Sciences et Développement économique Canada pour fonctionner avec les types d'antenne énumérés ci dessous et ayant un gain admissible maximal.

Les types d'antenne non inclus dans cette liste, et dont le gain est supérieur au gain maximal indiqué pour tout type figurant sur la liste, sont strictement interdits pour l'exploitation de l'émetteur.

Dipole Antenna Gain: 3.2 dBi @ 2.4 GHz, 4.25 dBi @ 5 GHz
Dipole Antenna Gain: 2.67 dBi @ 2.4 GHz, 3.67 dBi @ 5 GHz
Dipole Antenna Gain: 3.0 dBi @ 2.4 GHz, 4.0 dBi @ 5 GHz
Dipole Antenna Gain: 3.2 dBi @ 2.4 GHz
Monopole Antenna Gain: 2.6 dBi @ 2.4 GHz, 3.6 dBi @ 5GHz
Monopole Antenna Gain: 0.2 dBi @ 2.4 GHz

2.2.7 Antennas

The antenna models for ISED are described in **Table 16**.

Table 16: Antennas (ISED)

No.	Antenna P/N	Maker	Type	Peak Gain [dBi]		Connector / form
				2400-2500 MHz	5150-5850 MHz	
1	146153 (50 mm cable)	Molex	Dipole	3.2	4.25	u.FL

No.	Antenna P/N	Maker	Type	Peak Gain [dBi]		Connector / form
				2400-2500 MHz	5150-5850 MHz	
2	219611 (50 mm cable)	Molex	Dipole	2.67	3.67	u.FL
3	WT32D1-KX	Unitron	Dipole	3.0	4.0	u.FL
4	W24P-U	Inventek	Dipole	3.2	N/A	u.FL
5	Type 2FR_Antenna	Murata	Monopole	2.6	3.6	PCB Trace
6	Type 2BP-QN9090	Murata	Monopole	0.2	N/A	PCB Trace

No. 4 W24P-U can only be used in 2.4 GHz band
No. 5 Type 2FR_Antenna can only be used for ANT0 (Antenna Port 0)
No. 6 Type 2BP-QN9090 Antenna can only be used for ANT0 (Antenna Port 0)
No. 6 Type 2BP-QN9090 Antenna can only be used in 2.4 GHz band

2.2.7.1 Signal Line Between an Antenna and a Module

It is a 50 Ω line design. Fine tuning of return loss etc. can be performed using a matching network. However, it is required to check "Class1 change" and "Class2 change" which the authorities define then.

The concrete contents of a check are the following three points:

1. It is the same type as the antenna type of antenna specifications.
2. An antenna gain is lower than a gain given in antenna specifications.
3. The emission level is not getting worse.

50 Ω line (microstrip line length) and Trace Antenna (Type 2FR_Antenna) are used as the design of the EVB used for the test. **Figure 5** shows the pattern used in the certification test.

The 50 Ω microstrip line and Type 2FR_Antenna needs to be copied when module is installed in the End product.

Murata provides set makers with Gerber data or something similar.

2.2.7.2 Trace Antenna and Feed Line of The Jig Where the Certification Test is Conducted

- Substrate type name of certification test jig: **P2ML10229-S** and **P2ML10229-D**
- Feed line width: **0.4 mm**
- Substrate material: **FR-4**
- Substrate thickness between GND layer and surface layer: **0.235 mm**

Please refer **Figure 6** for Trace Antenna and Feed Line of The Jig.

2.2.8 Layout Guidance for Microstrip Design and External Antenna

ISED layout guidance is the same for FCC. Please refer to **2.1.9**.

2.2.9 About Power Supply (Limited Condition)

This Module (LBES0ZZ2FR) has been approved as Limited Modular Approval.
These modules do not have a voltage stabilizing circuit in the power path to the internal RF circuitry. Therefore, the Limited Condition must provide a stable power supply for the supply voltage to the module.
Please supply a stable power supply so that the voltage shown in the table below is applied. Please refer to for **Table 5**: Operating Conditions power supply voltage.

2.3 EU

The following report is issued:

Only the Antenna Terminated Conducted test section of each report is available for TCF of the final product.

The radiation characteristic data should be acquired by you in the final product.

Radio Equipment Directive (RED) 2014/53/EU Article 3.2

Conforms to: EN 300 328 v2.2.2:2019

Report No.:

Report No.:

Report No.:

EN 301 893 v2.1.1:2017

Report No.:

Report No.:

EN 300 440 v2.1.1:2017

Report No.:

Report No.:

Radio Equipment Directive (RED) 2014/53/EU Article 3.1a

Conforms to: EN 62311:2020

Report No.:

Product name: Communication Module

Model: LBES0ZZ2FR

Manufacture: Murata manufacturing Co., Ltd.

Hereby, Murata Electronics North America declares that the radio equipment type - Wireless Local Area Network Device - is in compliance with Directive 2014/53/EU. The full text of the EU

declaration of conformity is available at the following internet address: (https://www.murata.com/en-global/products/connectivitymodule/wi-fi-bluetooth/overview/lineup/Type 2FR).

When shipping final products with this module to Europe, make a self-declaration that the product complies with European regulations and apply the CE mark.

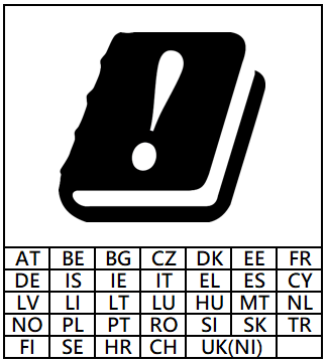

(1) For products with usage restrictions (Wi-Fi 5GHz), the following two warnings must be added to the manual:

- Restriction applies in AT/BE/BG/CZ/DK/EE/FR/DE/IS/IE/IT/EL/ES/CY/LV/LI/LT/LU/HU/MT/NL/NO/PL/PT/RO/SI/SK/TR/FI/SE/CH/UK(NI)/HR
- Operation in 5150~5350MHz is restricted to indoor use only.

(2) UM should include radio information:

(a) frequency band(s) in which the radio equipment operates; (b) maximum radio-frequency power; (c) accessories; (d) software

2.3.1 RF Power Setting

This section describes the RF power settings.

2.3.1.1 RF Power Setting for 2.4 GHz WLAN

RF Power Settings for 2.4 GHz WLAN are described in the following tables.

Table 17: WLAN RF Power Setting - 2.4 GHz 802.11b (EU)

Mode	Rate/MCS index	Channel	Maximum Tune Up Tolerance (dBm)
IEEE 802.11b	1 Mbps	1	14.0± 2.0
		7	14.0± 2.0
		13	14.0± 2.0

Table 18: WLAN RF Power Setting - 2.4 GHz 802.11g (EU)

Mode	Rate/MCS index	Channel	Maximum Tune Up Tolerance (dBm)
IEEE 802.11g	6 Mbps	1	14.0± 2.0
		7	14.0± 2.0
		13	14.0± 2.0

Table 19: WLAN RF Power Setting - 2.4 GHz 802.11n (HT20) (EU)

Mode	Rate/MCS index	Channel	Maximum Tune Up Tolerance (dBm)
IEEE 802.11n (HT20)	MCS0	1	14.0± 2.0
		7	14.0± 2.0
		13	14.0± 2.0

Table 20: WLAN RF Power Setting - 2.4 GHz 802.11ax (HE20) (EU)

Mode	MCS Index	Channel	SU	Maximum Tune Up Tolerance (dBm)	RU	Maximum Tune Up Tolerance (dBm)
IEEE 802.11ax (HE20)	MCS0	1	SU	14.0± 2.0		
			RU			14.0± 2.0
					26/0	7.0± 2.0
					26/8	7.0± 2.0
					52/37	9.0± 2.0
					52/40	9.0± 2.0
					106/53	13.0± 2.0
					106/54	13.0± 2.0
	MCS0	7	SU	14.0± 2.0		
			RU			14.0± 2.0
IEEE 802.11ax (HE20)	MCS0	13	SU	14.0± 2.0		
			RU			14.0± 2.0
					26/0	7.0± 2.0
					26/8	7.0± 2.0
					52/37	9.0± 2.0
					52/40	9.0± 2.0
					106/53	13.0± 2.0
					106/54	13.0± 2.0

2.3.1.2 RF Power Setting for BLE / IEEE 802.15.4

RF power settings for BLE and IEEE 802.15.4 are described in the following tables.

Table 21: BLE / IEEE 802.15.4 RF Power Setting (EU)

Mode	Channel	Maximum Tune Up Tolerance (dBm)
LE	NA	4.0± 2.0
LE 2 Mbps	NA	4.0± 2.0
IEEE802.15.4	11 ~ 25	4.0± 2.0
	26	-4.0± 2.0

2.3.1.3 RF Power Setting for 5 GHz WLAN (W52/W53/W56)

RF power settings for 5 GHz WLAN (W52/W53/W56) are described in the following tables.

Table 22: WLAN RF Power Setting - 5 GHz 802.11a for Channels 36 ~ 165 (EU)

Mode	Rate/MCS Index	Channel	Maximum Tune Up Tolerance (dBm)
IEEE 802.11a	6Mbps	36	15.0± 2.0
		64	16.0± 2.0
		100	15.0± 2.0
		140	15.0± 2.0
		149	7.0± 2.0
		157	7.0± 2.0
		165	7.0± 2.0

Table 23: WLAN RF Power Setting - 5 GHz 802.11n (HT20) for Channels 36 ~ 165 (EU)

Mode	Rate/MCS Index	Channel	Maximum Tune Up Tolerance (dBm)
IEEE 802.11n (HT20)	MCS0	36	15.0± 2.0
		64	15.0± 2.0
		100	15.0± 2.0
		140	15.0± 2.0
		149	7.0± 2.0
		157	7.0± 2.0
		165	7.0± 2.0

Table 24: WLAN RF Power Setting - 5 GHz 802.11ac (VHT20) for Channels 36 ~ 165 (EU)

Mode	Rate/MCS Index	Channel	Maximum Tune Up Tolerance (dBm)
IEEE 802.11ac (VHT20)	MCS0	36	15.0± 2.0
		64	15.0± 2.0
		100	15.0± 2.0
		140	15.0± 2.0
		149	7.0± 2.0
		157	7.0± 2.0
		165	7.0± 2.0

Table 25: WLAN RF Power Setting - 5 GHz 802.11ax (HE20) for Channels 36 ~ 165 (EU)

Mode	MCS Index	Channel	SU	Maximum Tune Up Tolerance (dBm)	RU	Maximum Tune Up Tolerance (dBm)
IEEE 802.11ax (HE20)	MCS0	36	SU	16.0± 2.0		
			RU			16.0± 2.0
					26/0	7.0± 2.0
					52/37	9.0± 2.0
					106/53	13.0± 2.0
		64	SU	16.0± 2.0		
			RU			16.0± 2.0
					26/8	7.0± 2.0
					52/40	9.0± 2.0
					106/54	13.0± 2.0
		100	SU	16.0± 2.0		
			RU			16.0± 2.0
					26/0	7.0± 2.0
					52/37	9.0± 2.0
					106/53	13.0± 2.0
		140	SU	16.0± 2.0		
			RU			16.0± 2.0
					26/8	7.0± 2.0
					52/40	9.0± 2.0
					106/54	13.0± 2.0
		149	SU	7.0± 2.0		
			RU			7.0± 2.0
					26/0	7.0± 2.0
					52/37	7.0± 2.0
					106/53	7.0± 2.0
		157	SU	7.0± 2.0		
					RU	7.0± 2.0
		165	SU	7.0± 2.0		
			RU			7.0± 2.0
					26/8	7.0± 2.0
					52/40	7.0± 2.0
					106/54	7.0± 2.0

2.3.2 Scanning and Ad Hoc Connection Modes

Table 26 below describes the Scanning and Ad Hoc connection capabilities of each mode.

Table 26: Scanning and Ad Hoc Connection Capabilities (EU)

Frequency of Operation			Scan	Ad hoc Mode
2.4 GHz	11b/g/n/ac/ax(BW20)	2412-2472 MHz	Active	Yes
	BLE	2402-2480 MHz	N/A	N/A
	IEEE 802.15.4	2405-2480 MHz	N/A	N/A
W52	11a/n/ac/ax (BW20)	5180-5240 MHz	Active	Yes

Frequency of Operation			Scan	Ad hoc Mode
W53[3]	11a/n/ac/ax (BW20)	5260-5320 MHz	Passive	No
W56[3]	11a/n/ac/ax (BW20)	5500-5700 MHz	Passive	No
W58	11a/n/ac/ax (BW20)	5745-5845 MHz	Active	Yes

2.3.3 Layout Guidance for Microstrip Design and External Antenna

ISED layout guidance is the same for FCC. Please refer to **2.1.9**.

[3] DFS MASTER function not available.
DFS client function available.
There is a TPC function.

2.4 Japan

- **Manufacturer Name:** Murata Manufacturing Co., Ltd.
- **Model or Product Name:** LBES0ZZ2FR

This module has received “CERTIFICATION for TYPE CERTIFICATION" under the Japanese Radio Act.

電波法の要求に基づく警告

（警告）5 GHz の周波数帯においては、5.2 GHz/5.3GHz/5.6GHz 帯 (W52/W53/W56)の 3 種類の帯域を使用することができます。5.2 GHz/5.3 GHz 帯無線 LAN (W52/W53)の屋外使用は 5.2GHz 帯高出力データ通信システムの基地局又は陸上移動中継局と通信する場合を除き電波法で禁止されています

English Translation
Warning based on the requirements of Japanese Radio Act.
(Warning) In the 5GHz frequency band, you can use 3 bands: 5.2GHz/5.3GHz/5.6GHz(W52/W53/W56).
Outdoor use of 5.2 GHz/5.3 GHz band wireless LANs(W52/W53) is prohibited by the Radio Act except when communicating with 5.2 GHz band high-power data communication system base stations or land mobile relay stations.

R 001-xxxxxx

W52/53 は屋内使用限定

2.4GHz と 5GHz(W52,W53,W56)で使用するモジュールです。
W53/W56 は子局としてのみ動作させてください。

English Translation
This is a module for use at 2.4 GHz and 5 GHz (W52, W53, W56).
Operate the W53/W56 only as a client mode.

2.4.1 Product Outline

This specification characterizes the IEEE 802.11 a/b/g/n/ac/ax + Bluetooth BR/EDR/LE + 802.15.4 tri-radio solution combo module.

- **Product Size:** 12 x 11 mm (Typical), H = 1.55 mm (Maximum)
- **Wireless-IC:** NXP RW612
- **Reference Clock**: 40 MHz X′tal
- **Weight:** 0.49 g

2.4.2 Feature

- **Product Name:** Communication Module
- **Model Name:** LBES0ZZ2FR
- **Purpose of the equipment:** Telecommunication

- **Equipment Type:** Transceiver
- **Frequency band:** 2412-2472 MHz/ 2402-2480 MHz/ 2405-2480 MHz/
  5180-5320 MHz/ 5500-5720 MHz
- **Channel:** (WLAN)1 ~ 13 ch/ 36 ~ 64 ch/ 100 ~ 144 ch
  (BT)1 ~ 79 ch (BLE) 1 ~ 40 ch (IEEE 802.15.4)11 ~ 26 ch
- **Bandwidth:** (WLAN) 2.4 GHz 11b (20 MHz)/11g (20 MHz)/11n (20 MHz)/
  11ac(20MHz)/11ax(20MHz)
  5 GHz 11a (20 MHz)/11n (20 MHz)/11ac (20 MHz)/11ax (20 MHz)
  BLE 1 MHz / 2 MHz
  IEEE 802.15.4 1 MHz
- **Input Voltage to RF parts:** Typical 3.3V

2.4.3 RF Power Setting

2.4.3.1 RF Power Setting for 2.4 GHz WLAN

RF Power Settings for 2.4 GHz WLAN are described in the following tables.

Table 27: WLAN RF Power Setting - 2.4 GHz 802.11b (Japan)

Mode	Rate/MCS index	Channel	Maximum Tune Up Tolerance (dBm)
IEEE 802.11b	1 Mbps	1	15.0± 2.0
		7	15.0± 2.0
		13	15.0± 2.0

Table 28: WLAN RF Power Setting - 2.4 GHz 802.11g (Japan)

Mode	Rate/MCS index	Channel	Maximum Tune Up Tolerance (dBm)
IEEE 802.11g	6 Mbps	1	19.0± 2.0
		7	19.0± 2.0
		13	18.0± 2.0

Table 29: WLAN RF Power Setting - 2.4 GHz 802.11n (HT20) (Japan)

Mode	Rate/MCS index	Channel	Maximum Tune Up Tolerance (dBm)
IEEE 802.11n (HT20)	MCS0	1	19.0± 2.0
		7	19.0± 2.0
		13	18.0± 2.0

Table 30: WLAN RF Power Setting - 2.4 GHz 802.11ax (HE20) (Japan)

Mode	Rate/MCS index	Channel	RU	Maximum Tune Up Tolerance (dBm)
IEEE 802.11ax (HE20)	MCS0	1	Full	19.0± 2.0
		7	Full	19.0± 2.0
		13	Full	18.0± 2.0

2.4.3.2 RF Power Setting BLE / IEEE 802.15.4

RF power settings for BLE and IEEE 802.15.4 are described in the following tables.

Table 31: BLE Modulation (Spread Spectrum Frequency Hopping System) - 2402 MHz ~ 2480 MHz (2 MHz Interval 40 Waves) (Japan)

No.	Mode	Modulation System	Type of Radio Wave	Transmission Rate (Mbps)	Output Power (dBm)/Port
1	LE 1 Mbps	GFSK	F1D	1	8.0± 2.0
2	LE 2 Mbps	GFSK	F1D	2	7.0± 2.0

Table 32: IEEE 802.15.4 SS Technique (Direct Sequence Spread Spectrum) - 2405 MHz ~ 2480 MHz (5 MHz Interval 16 Waves) (Japan)

No.	Mode (ch)	Modulation System	Type of Radio Wave	Transmission Rate (Kbps)	Output Power (dBm)/Port
1	15.4 (ch 11-25)	O-QPSK	G1D	250	8.0± 2.0
2	15.4 (ch 26)	O-QPSK	G1D	250	-4.0± 2.0

2.4.3.3 RF Power Setting for 5 GHz WLAN

RF power settings for 5 GHz WLAN are described in the following tables.

Table 33: WLAN RF Power Setting - 5 GHz 802.11a for Channels 36 ~ 144 (Japan)

Mode	Rate/MCS Index	Channel	Maximum Tune Up Tolerance (dBm)
IEEE 802.11a	6Mbps	36	15.0± 2.0
		44	15.0± 2.0
		48	15.0± 2.0
		52	16.0± 2.0
		60	15.0± 2.0
		64	15.0± 2.0
		100	18.0± 2.0
		120	17.0± 2.0
		144	18.0± 2.0

Table 34: WLAN RF Power Setting - 5 GHz 802.11n (HT20) for Channels 36 ~ 144 (Japan)

Mode	Rate/MCS Index	Channel	Maximum Tune Up Tolerance (dBm)
IEEE 802.11n (HT20)	MCS0	36	17.0± 2.0
		44	17.0± 2.0
		48	17.0± 2.0
		52	17.0± 2.0
		60	17.0± 2.0
		64	17.0± 2.0
		100	16.0± 2.0
		120	16.0± 2.0
		144	16.0± 2.0

Table 35: WLAN RF Power Setting - 5 GHz 802.11ac (VHT20) for Channels 36 ~ 144 (Japan)

Mode	Rate/MCS Index	Channel	Maximum Tune Up Tolerance (dBm)
IEEE 802.11ac (VHT20)	MCS0	36	17.0± 2.0
		44	17.0± 2.0
		48	16.0± 2.0
		52	17.0± 2.0
		60	17.0± 2.0
		64	16.0± 2.0
		100	16.0± 2.0
		120	16.0± 2.0
		144	16.0± 2.0

Table 36: WLAN RF Power Setting - 5 GHz 802.11ax (HE20) for Channels 36 ~ 144 (Japan)

Mode	Rate/MCS index	Channel	RU	Maximum Tune Up Tolerance (dBm)
IEEE 802.11ax (HE20)	MCS0	36	Full	17.0± 2.0
		44	Full	17.0± 2.0
		48	Full	17.0± 2.0
		52	Full	17.0± 2.0
		60	Full	17.0± 2.0
		64	Full	17.0± 2.0
		100	Full	16.0± 2.0
		120	Full	16.0± 2.0
		144	Full	16.0± 2.0

2.4.4 Scanning and Ad Hoc Connection Modes

Table 37 below describes the Scanning and Ad Hoc connection capabilities of each mode.

Table 37: Scanning and Ad Hoc Connection Capabilities (Japan)

Frequency of Operation			Scan	Ad hoc Mode
2.4 GHz	11b/g/n/ac/ax(BW20)	2412-2472 MHz	Active	Yes
	BLE	2402-2480 MHz	N/A	N/A
	IEEE 802.15.4	2405-2480 MHz	N/A	N/A
W52	11a/n/ac/ax (BW20)	5180-5240 MHz	Active	Yes
W53	11a/n/ac/ax (BW20)	5260-5320 MHz	Passive	No
W56	11a/n/ac/ax (BW20)	5500-5720 MHz[4]	Passive	No

2.4.5 Antenna

The antenna registered under the Radio Act Certification of Japan are described in **Table 38**.

Table 38: Antenna (Japan)

No.	Antenna Model	Antenna Type	Antenna Manufacturer	Peak Gain [dBi]	
				2.4-2.5GHz	5.15-5.85 MHz
1	Type 2FR	PCB Monopole	Murata	2.6	3.6
2	Type2BP-QN9090-EVK	Monopole	Murata	0.2	
3	146187	dipole	Molex	3	4.25
4	146153	dipole	Molex	3.2	4.25
5	219611	dipole	Molex	2.67	3.67
6	H2B1WD1A3B0200	dipole	Unictron	3	4
7	TA-6B-A-WE01	dipole	Unictron	2.23	4.59
8	FXP.830.07.0100C	dipole	Taoglas	2.55	4.66
9	GW.48.A151	dipole	Taoglas	1.82	3.28
10	GW.40.2153	dipole	Taoglas	3.15	4.39
11	GW.52.A153	dipole	Taoglas	2.93	4.53
12	SRF2W012	dipole	Antenova	3	4
13	STDANTEMD-013	dipole	Sansei	1.9	2.8
14	EMF2471A3S	dipole	Laird	2.4	4.4
15	1001932FT	dipole	KVAX	2.5	4.4
16	1001932PT	dipole	KVAX	2.03	4.45
17	W3P35x8W04-U100D3B0A	dipole	KVAX	2.3	5
18	W24P-U	dipole	Inventek	3.2	

[4] DFS MASTER function not available.
DFS client function available.
There is a TPC function.

No. 1 Type 2FR antenna can only be used for ANT0 (Antenna Port 0)
No. 2 Type 2BP-QN9090 can only be used for ANT0 (Antenna Port 1)
No. 2 Type 2BP-QN9090 can only be used over 2.4 GHz band
No. 18 W24P-U can only be used over 2.4 GHz band.

For No. 2 ~ No. 18 antennae, obtain the data sheet from the antenna manufacturer's website, as given below. Refer to Section 2.4.5.1 for details of the No. 1 antenna from Murata.

- Molex Electronic Solutions
  https://www.molex.com/molex/home
- Unictron Technologies Corp.
  https://www.unictron.com/
- Taoglas
  https://www.talglas.com/
- Antenova Ltd.
  https://www. https://www.antenova.com/
- Sansei Electric Co., Ltd.
  https://www. https://san-sei.co.jp/
- Laird
  https://www.ezurio.com/
- KVAX
  https://www.kyocera-avx.com/
- Inventek Systems, LLC.
  https://www.inventeksys.com/

2.4.5.1 Type 2FR_Antenna

When using Type 2FR_Antenna, make sure to match the drawings shown in **Figure 6** below.

2.4.5.2 Appearance

Figure 5: EVB Design Used for Testing shows the antenna appearance.

2.4.5.3 Measurement Directions

Figure 10 shows the measurement directions.

Figure 10: Antenna Measurement Directions (Japan)

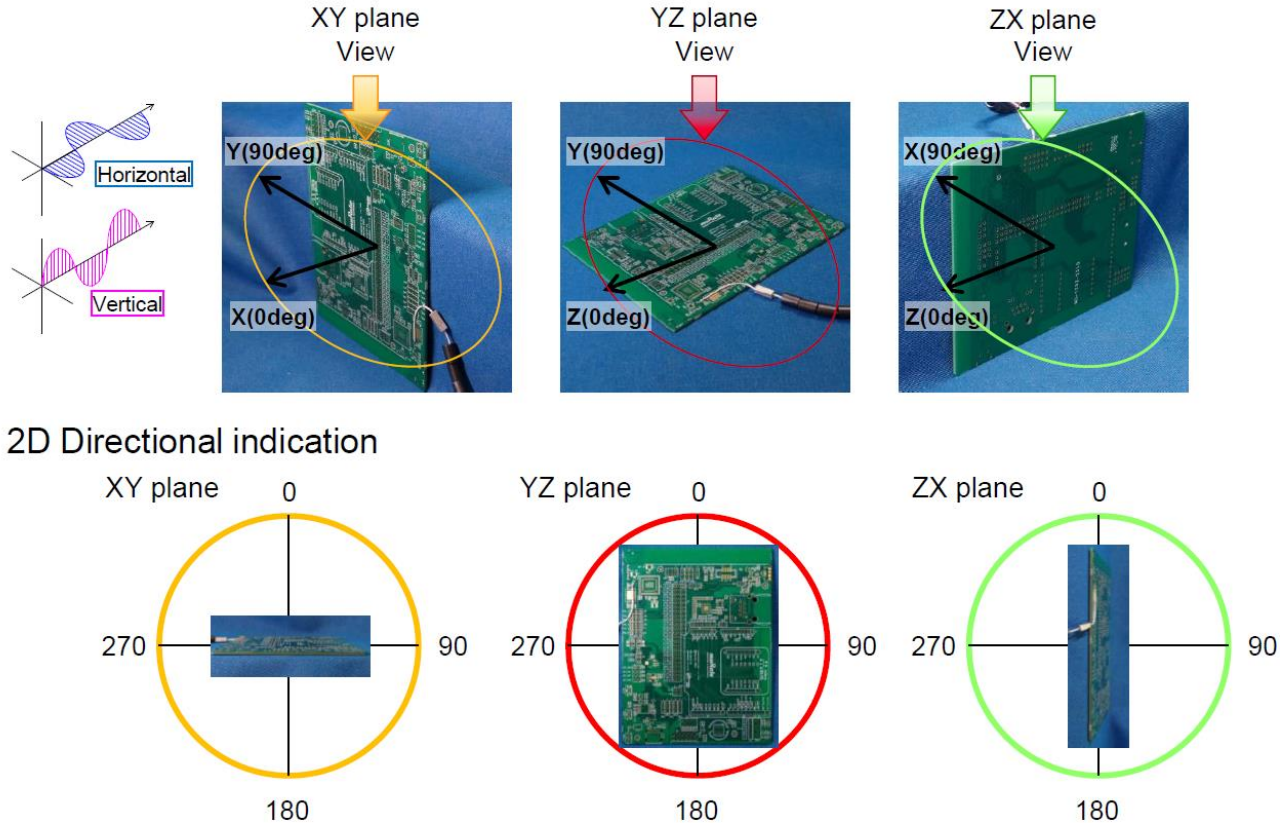

2.4.5.4 Measurement Result

The measurement results are shown in **Figure 11**.

Figure 11: Antenna Measurement Result (Japan)

<Efficiency>

[dBi] [dB]

LINEAR POLAMIZATION		XY-plane hor.	XY-plane ver.	YZ-plane hor.	YZ-plane ver.	ZX-plane hor.	ZX-plane ver.	Total Efficiency
2400 MHz	MAX.	0.6	-1.7	2.6	-17.7	-0.7	-1.1	
	AVE.	-5.3	-7.0	-3.1	-23.6	-6.1	-4.6	-1.7
2442 MHz	**MAX.**	**0.2**	**-2.0**	**2.5**	**-17.1**	**-1.0**	**-1.3**	
	AVE.	**-5.6**	**-7.1**	**-3.2**	**-23.3**	**-6.3**	**-4.9**	**-1.9**
2484 MHz	MAX.	-0.1	-2.3	2.1	-18.2	-1.2	-1.8	
	AVE.	-5.9	-7.3	-3.4	-23.9	-6.7	-5.4	-2.2

[dBi] [dB]

LINEAR POLAMIZATION		XY-plane hor.	XY-plane ver.	YZ-plane hor.	YZ-plane ver.	ZX-plane hor.	ZX-plane ver.	Total Efficiency
5150 MHz	MAX.	2.0	1.9	3.4	-16.5	-2.2	0.4	
	AVE.	-3.8	-5.0	-2.9	-23.1	-8.8	-4.0	-2.2
5500 MHz	**MAX.**	**1.9**	**3.1**	**3.6**	**-16.4**	**-0.9**	**-0.5**	
	AVE.	**-4.2**	**-4.3**	**-2.8**	**-22.5**	**-7.9**	**-4.4**	**-2.4**
5850 MHz	MAX.	2.5	2.2	3.6	-14.6	0.2	-2.2	
	AVE.	-4.0	-4.8	-2.9	-21.3	-7.1	-6.4	-2.6

*Red color shows peak gain

<Directivity>

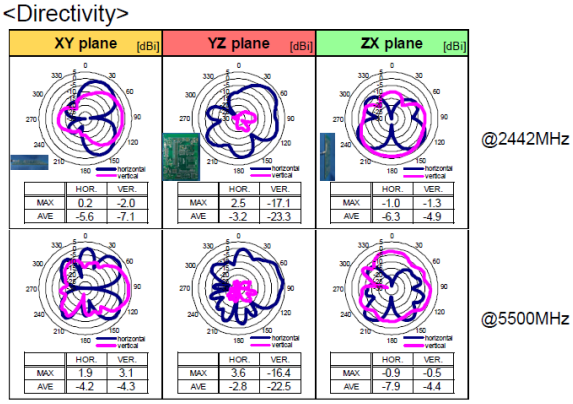

2.4.6 Notification

It is recommended that the indication of (1) or (2) below is described on the product incorporating this module in Japanese. If there is any problem with the indication of (1) or (2) on the product, we recommend indicating (1) or (2) in the user manual or on the package of the product incorporating this module, or electronic display on the product. In the case of the electronic display, it is necessary to describe "using the electronic display" + "how to reach to below indication" in the user manual of the product.

(1)

本製品は、電波法に基づく工事設計認証(認証番号:001-P01964)を受けた特定無線設備を内蔵しています。

(2)

R 001-xxxxxx

W52/53 は屋内使用限定

5.2GHz/5.3GHz 帯無線 LAN(W52/W53)の屋外使用は 5.2GHz 帯高出力データ通信システムの基地局又は陸上移動中継局と通信する場合を除き電波法で禁止されています。

(English Translation)
(1)

This product incorporates specified radio equipment that has received CERTIFICATION for TYPE CERTIFICATION (certification number: 001-P01964) based on the Japan Radio Act.

(2)

R 001-xxxxxx

W52/53 は屋内使用限定

Outdoor use of 5.2GHz/5.3GHz band wireless LANs (W52/W53) is prohibited by the Radio Act except when communicating with 5.2GHz band high-power data communication system base stations or land mobile relay stations.

Revision History

Revision	Date	Author	Change Description
1.0	June 28, 2024		Initial Release

Copyright © Murata Manufacturing Co., Ltd. All rights reserved. The information and content in this document are provided “as-is” with no warranties of any kind and are for informational purpose only. Data and information have been carefully checked and are believed to be accurate; however, no liability or responsibility for any errors, omissions, or inaccuracies is assumed.

Wi-Fi® is a registered trademark of Wi-Fi Alliance. The Bluetooth® word mark and logos are registered trademarks owned by Bluetooth SIG, Inc. Other brand and product names are trademarks or registered trademarks of their respective owners.

Specifications are subject to change without notice.