Product Name.	USRR05MA
Product Type	24GHz RADAR
Model Name	PX-USR-05MA
Project	TSWIN_MA_CAR_DVR
Customer Name	TSWIN_MA

Part No.	Customer Approved Signature

CONTENTS

1. DESCRIPTION 3
2. FEATURES 3
3. CERTIFICATES 3
4. RoHS-INFO 3
5. ELECTRICAL CHARTACTERISTICS 4
6. ANTENNA PATTERN 4
7. INTERFACE 5
7.1 PIN DEFINITON 5
7.2 MODULE CONNECTOR 3D OUTLINES 5
8. BLOCK DIAGRAM 6
9. OUTLINE DIMENSION 6
10. APPENDIXES 7
10.1 PACKING SPEC 7

1. DESCRIPTION

K-Band based motion detector. It is suitable for integration into small devices as sensing motion and distance measurement functions, and is applied to smart IoT devices and recording devices, such as smart control, automatic sensor lights, DVR, automatic door control switches and security systems.

- Movement
- Presence
- Velocity
- Distance

2. FEATURES

- Radar-based motion detector working in the 24GHz - ISM - Band
- Detection of direction and velocity of moving objects
- Integrated Low Noise Amplifier
- Extended temperature range from -40°C up to +85°C
- Very small outline dimensions
- Customized firmware to apply in different application

3. CERTIFICATES

- ISO9001
- ISO14001

4. RoHS-INFO

This product is compliant to the restriction of hazardous substances (RoHS - Directive (EU) 2015/863).

5. ELECTRICAL CHARTACTERISTICS

Typical values are measured at T_A = 25 °C

Parameter	Symbol	Min.	Typical	Max.	Unit	Note/Condition
Operating Frequency	$f_{standard}$	24.150		24.250	GHz	(*1)
Detection Frame rate			250		ms	4Hz, Idle for 230ms
Supply voltage	V_{CC}	3.0	3.3	3.6	V	DCIN
Run mode current	I_{CC}	240	250	270	mA	DCIN=3.3V
Average current	I_{OP}		17	20	mA	@3.3V,duty cycle: 4Hz
Antenna type		1*4 planar antenna				1T1R
Antenna FOV (-10 dB)	AZ		145		°	Horizontal (*design value)
	EL		47		°	Vertical (*design value)
Detection range		1		20	m	(*2)
Detection Resolution			50		cm	
Ambient temperature range	T_A	-40	—	+85	°C	
Storage temperature range	T_{STG}	-40	—	+85	°C	

Remark *1: There are options in FW that can be set to US or UK Frequency band
(US - Frequency band : 24.125GHz ~ 24.250GHz, UK-Frequency band : 24.150GHz ~ 24.250GHz)

Remark *2: According to the radar test report, when the radar angle (AZ) is 0 degrees and the sensitivity is level 2, detect the distance of moving target, Human:1m ~ 6m, and cars (sedan): 1m ~ 10m.

Parameter	Min.	Typical	Max.	Unit	Note/Condition
Tx power output		10	13	dBm	
Bandwidth		100		MHz	

6. ANTENNA PATTERN

AZ

* design value

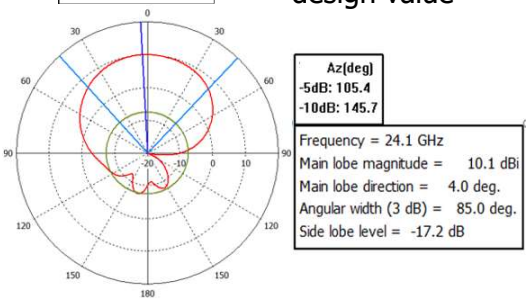

Theta / Degree vs. dB

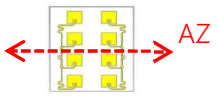

EL

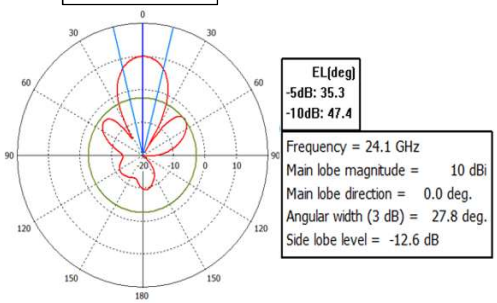

Theta / Degree vs. dB

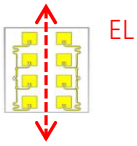

7. INTERFACE

7.1 PIN DEFINITON

PIN NO.	I/O	Front Radar		Rear Radar	
		In/Out	PIN definition	In/Out	PIN definition
1	I2C SDA (*2)	IN/OUT	I2C SDA		N/C
2	I2C SCL (*2)	IN	I2C SCL		N/C
3	GPIO_3 (*1)	IN	Radar Interrupt	OUT	RCAM_ON
4	GPIO_2 (*1)	IN	Parking Status	OUT	LED_ON
5	GPIO_0 (*1)	IN	ID(Low)	IN	ID(High)
6	GPIO_1 (*1)	OUT	DVR Interrupt	OUT	CAM_SEL
7	VCC	IN	3.3V	IN	3.3V
8	TX(LIN)	OUT	TX(LIN)	OUT	TX(LIN)
9	GND	IN	GND	IN	GND
10	RX(LIN)	IN	RX(LIN)	IN	RX(LIN)

Remark *1 : GPIO supports High(2.6V tolerate 5V) / Low signal, Max fan out current 6mA.

Remark *2 : The I2C master device needs to add a 2K ohm pull-up resistor.(I2C Voltage: 3.3V typical, Voltage range 1.8 ~ 5V)

7.2 MODULE CONNECTOR 3D OUTLINES

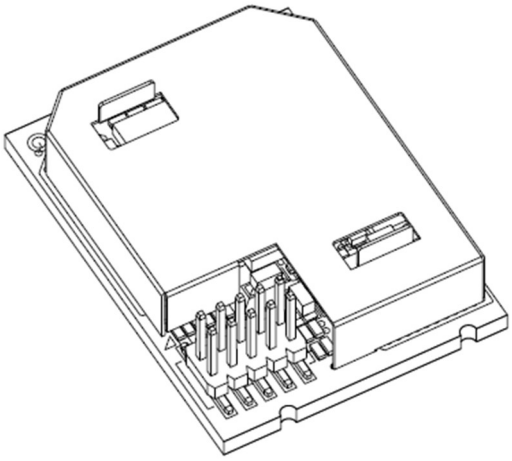

8. BLOCK DIAGRAM

MA Black Diagram +UMEC Radar Module Block Diagram

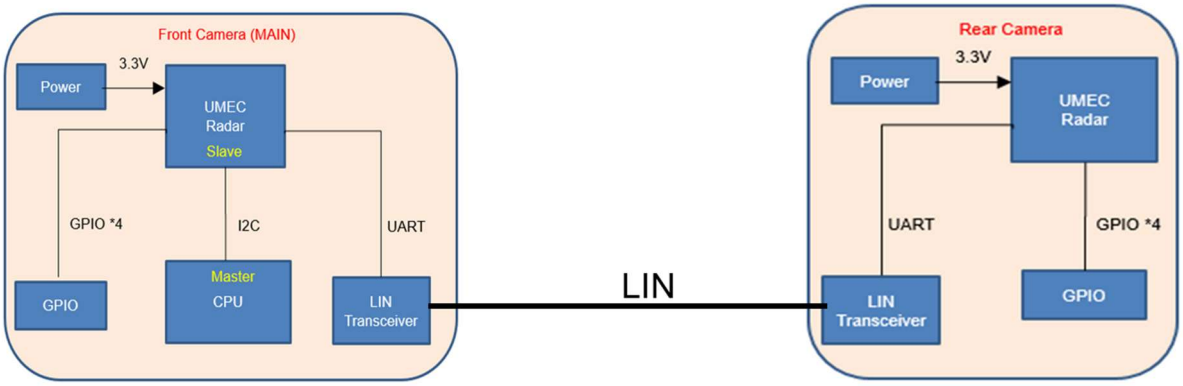

*I2C[SDA/SCL] *GPIO *UART[TX/RX]

1) DVR Interrupt
2) ID
3) Parking Status
4) Radar Interrupt

*Power[Vin/GND]

*UART[TX/RX] *GPIO

1) CAM_SEL
2) ID
3) LED_ON
4) RCAM_ON

*Power[Vin/GND]

9. OUTLINE DIMENSION

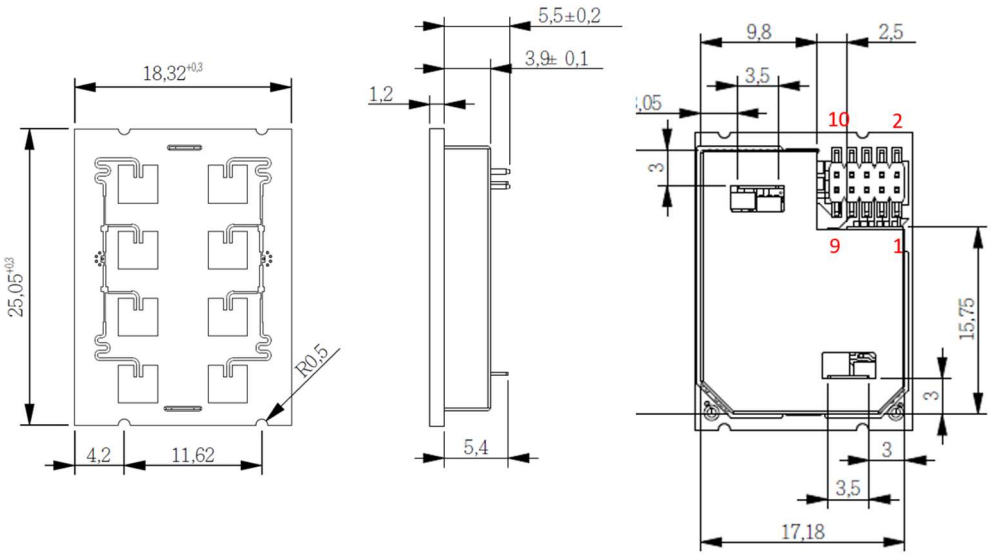

10. APPENDIXES

10.1 PACKING SPEC

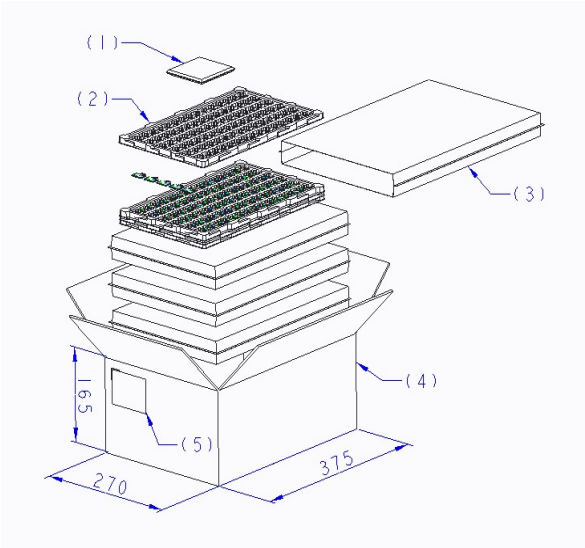

Figure2. Schematic view of the box

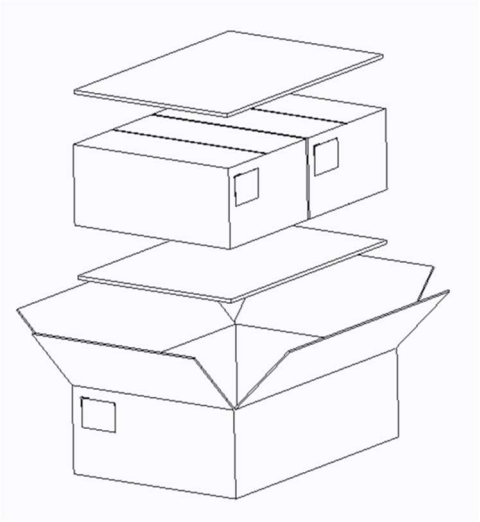

Figure1. Schematic view of the carton

- Packaging list:

No	Packaged	Box	Bag	Tray	Module total Qty	Remarks
1	Carton					Figure 1
2	Box					Figure 2
3	Bag					Figure 3

- Packaging contains:

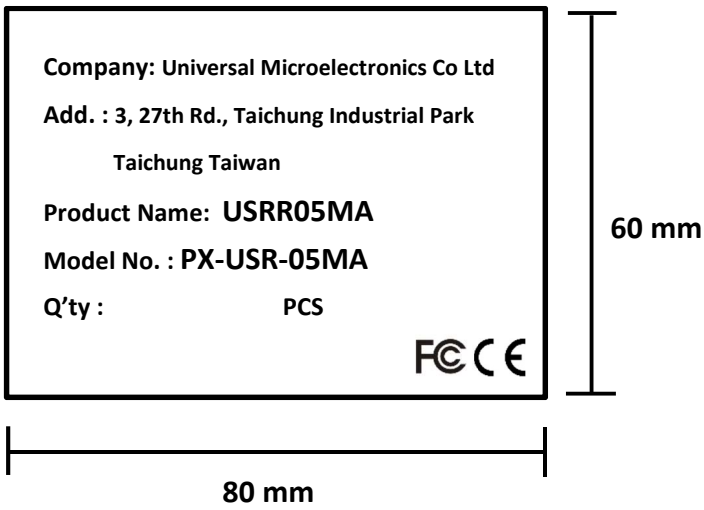

Figure 2. Box Label Diagram

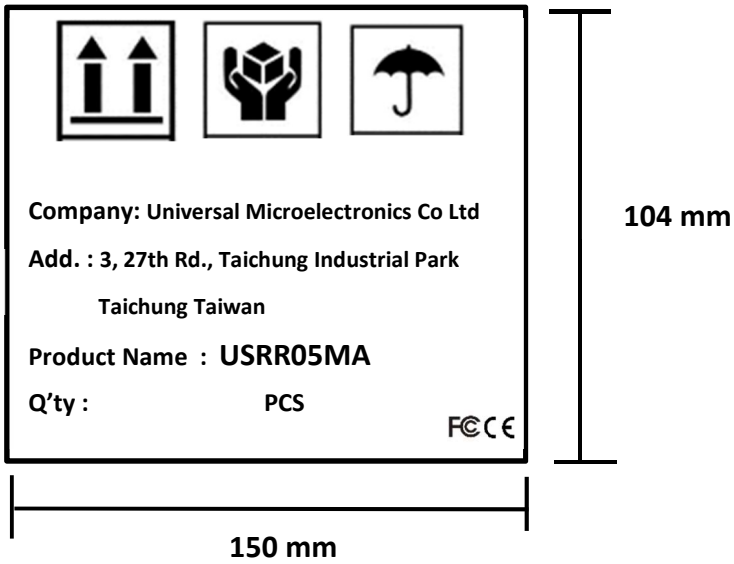

Figure 1. Carton Label Diagram

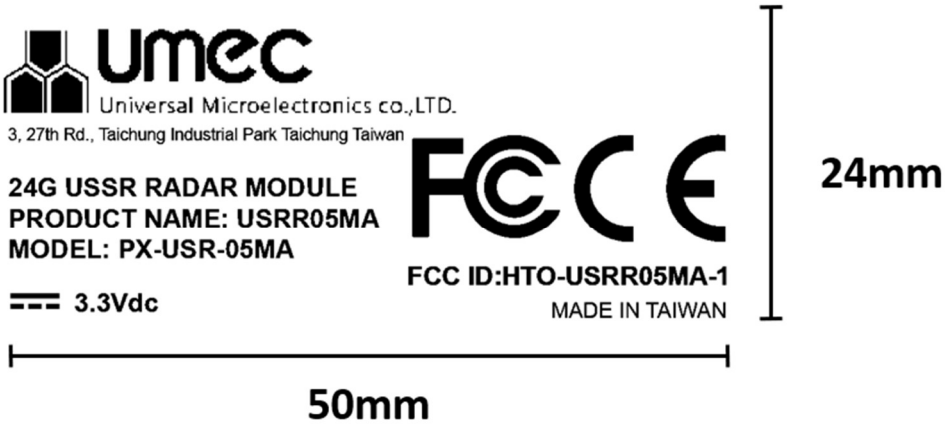

Figure 3. Bag Label Diagram

Universal Microelectronics Co., Ltd.
3,27TH RD.,Taichung Industrial Park. Taichung, Taiwan
TEL: +886-4-23590096
EMAIL: sales@umec.com.tw

FCC ID: HTO-USRR05MA-1

EU DECLARATION OF CONFORMITY

Hereby, UMEC(Universal Microelectronics Co., Ltd.)/ 3,27TH RD.,Taichung Industrial Park. Taichung, Taiwan declares that the PX-USR-05MA is in compliance with Directive 2014/53/EU.
The full text of the EU declaration of conformity is available at the following internet address:
www.umec.com.tw

RF Exposure Warning – FCC

This equipment must be installed and operated in accordance with provided instructions and the antenna(s) used for this transmitter must be installed to provide a separation distance of at least 20 cm from all persons and must not be co-located or operating in conjunction with any other antenna or transmitter. End-users and installers must be provide with antenna installation instructions and transmitter operating conditions for satisfying RF exposure compliance.

RF Exposure Warning – CE

This equipment must be installed and operated in accordance with provided instructions and the antenna(s) used for this transmitter must be installed to provide a separation distance of at least 20 cm from all persons. End-users and installers must be provide with antenna installation instructions and transmitter operating conditions for satisfying RF exposure compliance.

Frequency Band & Max. Output Power

Parameter	Symbol	Min.	Typical	Max.	Unit	Note/Condition
Operating Frequency	$f_{standard}$	24.150		24.250	GHz	(*1)
Detection Frame rate			250		ms	4Hz, Idle for 230ms
Supply voltage	V_{CC}	3.0	3.3	3.6	V	DCIN
Run mode current	I_{CC}	240	250	270	mA	DCIN=3.3V
Average current	I_{OP}		17	20	mA	@3.3V,duty cycle: 4Hz

Remark *1: There are options in FW that can be set to US or UK Frequency band
(US - Frequency band : 24.125GHz ~ 24.250GHz, UK-Frequency band : 24.150GHz ~ 24.250GHz)

OEM Guide

This module is intended for OEM integrator. The OEM integrator is responsible for the compliance to all the rules that apply to the product into which this certified RF module is integrated. such as 15B, emission in 15C, and RF exposure should re-examed in accordance with permissive change policy. Additional testing and certification may be necessary when multiple modules are used. Host vendors are required to use identical antenna listed in this given guide. Any modification should involve re-measurement on the pertinent rules, such as 15C emission, and RF exposure, in accordance with permissive change policy by FCC.

USERS MANUAL OF THE END PRODUCT:

OEM shall be noticed that Installation to the product should contain the warning complying with § 15.105. The end user has to also be informed that any changes or modifications not expressly approved by the manufacturer could void the user's authority to operate this equipment.

Operation is subject to the following two conditions: (1) this device may not cause harmful interference and (2) this device must accept any interference received, including interference that may cause undesired operation.

In the user’s manual of the end product, the end user has to be informed to keep at least 20cm separation with the antenna while this end product is installed and operated.

The end user has to be informed that the FCC radio-frequency exposure guidelines for an uncontrolled environment can be satisfied.

LABEL OF THE END PRODUCT:

The final end product must be labeled in a visible area with the following " Contains TX FCC ID: HTO-USRR05MA-1 ".

Cautions on Assembling

This 05MA module is well shielded and with reinforcement of 0.1mm copper foil sticker at the positioning dowel and other potential leakage. Please do not **remove**, **drill hole** or **peel off** the copper foil when assembling module to product.

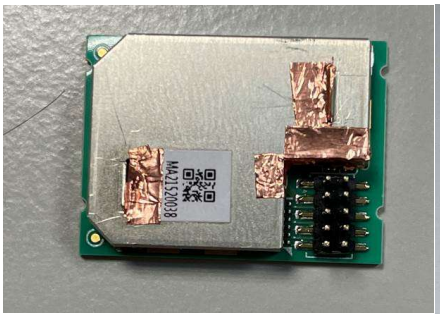

This 05MA module is designed and made by UMEC(Universal Microelectronics Co., Ltd.).

3,27TH RD.,Taichung Industrial Park. Taichung, Taiwan

TEL: +886-4-23590096