Amber Helm Development L.C.
92723 Michigan Hwy-152
Sister Lakes, Michigan 49047 USA
Tel: 888-847-8027

EMC Test Report

DENBT-1802232TX
Issued: **March 12, 2018**

regarding

USA:	**CFR Title 47, Part 15.247**	(Emissions)
USA:	**CFR Title 47, Part 2.1091;2.1093**	(Exposure)
Canada:	**ISED RSS-247v2/GENv4**	(Emissions)
Canada:	**ISED RSS-102**	(Exposure)

for

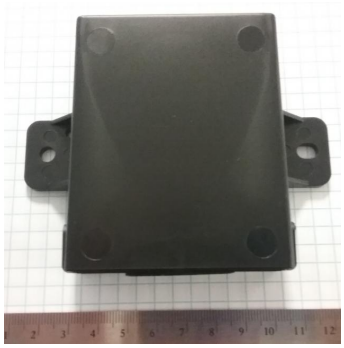

S2NA0

Category: DTS module

Judgements:
15.247/RSS-247v2 Transceiver
Tested: January 25, 2018

TESTING No. 200129-0

Prepared for:

DENSO Corporation

1-1, Showa-Cho, Kariya-Shi Aichi-Ken 448-8661 Japan
Phone: +81566615209
Fax: +81566254837
Contact: Kazunari Nakamura
kazunari_nakamura@denso.co.jp

Data Recorded by: _____
Gordon Helm, EMC-002401-NE

Reviewed by: _____
Dave Miller, EMC-003027-NE

Prepared by: _____
Dr. Joseph Brunett, EMC-002790-NE

Date of Issue: March 12, 2018

Revision History

Rev. No.	Date	Details	Revised By
r0	March 12, 2018	Initial Release.	J. Brunett
r1	March 21, 2018	Image correction.	J. Brunett
r2	March 30, 2018	Rename as module.	J. Brunett
r3	April 16, 2018	Change of contact.	J. Brunett
r4	May 31, 2018	DSS to DTS, ISED versions updated.	J. Brunett

Contents

Revision History **2**

Table of Contents **2**

1 Test Report Scope and Limitations **5**
1.1 Laboratory Authorization . . . 5
1.2 Report Retention . . . 5
1.3 Subcontracted Testing . . . 5
1.4 Test Data . . . 5
1.5 Limitation of Results . . . 5
1.6 Copyright . . . 5
1.7 Endorsements . . . 5
1.8 Test Location . . . 6
1.9 Traceability and Equipment Used . . . 6

2 Test Specifications and Procedures **7**
2.1 Test Specification and General Procedures . . . 7

3 Configuration and Identification of the Equipment Under Test **8**
3.1 Description and Declarations . . . 8
3.1.1 EUT Configuration . . . 8
3.1.2 Modes of Operation . . . 8
3.1.3 Variants . . . 8
3.1.4 Test Samples . . . 9
3.1.5 Functional Exerciser . . . 9
3.1.6 Modifications Made . . . 9
3.1.7 Production Intent . . . 9
3.1.8 Declared Exemptions and Additional Product Notes . . . 9

4 Emissions **10**
4.1 General Test Procedures . . . 10
4.1.1 Radiated Test Setup and Procedures . . . 10
4.1.2 Conducted Emissions Test Setup and Procedures . . . 12
4.1.3 Power Supply Variation . . . 12
4.2 Intentional Emissions . . . 13
4.2.1 Duty and Transmission Cycle, Pulsed Operation . . . 13
4.2.2 Fundamental Emission Bandwidth . . . 14
4.2.3 Effective Isotropic Radiated Power . . . 16
4.2.4 Power Spectral Density . . . 17
4.3 Unintentional Emissions . . . 19
4.3.1 Transmit Chain Spurious Emissions . . . 19

4.3.2 Relative Transmit Chain Spurious Emissions 20
4.4 RF Exposure 21
4.4.1 Exposure and Potential Health Hazard 21

5 Measurement Uncertainty and Accreditation Documents 22

List of Tables

1 Test Site List. 6
2 Equipment List. 6
3 EUT Declarations. 8
4 Pulsed Emission Characteristics (Duty Cycle). 13
5 Intentional Emission Bandwidth. 14
6 Effective Isotropic Radiated Power Results. 16
7 Power Spectral Density Results. 17
8 Transmit Chain Spurious Emissions. 19
9 Electromagnetic Field Exposure. 21
10 Measurement Uncertainty. 22

List of Figures

1 Photos of EUT. 8
2 EUT Test Configuration Diagram. 9
3 Radiated Emissions Diagram of the EUT. 10
4 Radiated Emissions Test Setup Photograph(s). 11
5 Pulsed Emission Characteristics (Duty Cycle). 13
6 Intentional Emission Bandwidth. 15
7 Power Spectral Density Plots. 18
8 Conducted Transmitter Emissions Measured. 20
9 Accreditation Documents 22

1 Test Report Scope and Limitations

1.1 Laboratory Authorization

Test Facility description and attenuation characteristics are on file with the FCC Laboratory, Columbia, Maryland (FCC Reg. No: 90413) and with ISED Canada, Ottawa, ON (File Ref. No: IC3161). Amber Helm Development L.C. holds accreditation under NVLAP Lab Code 200129-0 and includes within its scope CFR Title 47 Part 15 Subparts B and C.

1.2 Report Retention

For equipment verified to comply with the regulations herein, the manufacturer is obliged to retain this report with the product records for the life of the product, and no less than ten years. A copy of this Report will remain on file with this laboratory until March 2028.

1.3 Subcontracted Testing

This report does not contain data produced under subcontract.

1.4 Test Data

This test report contains data included within the laboratories scope of accreditation.

1.5 Limitation of Results

The test results contained in this report relate only to the item(s) tested. Any electrical or mechanical modification made to the test item subsequent to the test date shall invalidate the data presented in this report. Any electrical or mechanical modification made to the test item subsequent to this test date shall require reevaluation.

1.6 Copyright

This report shall not be reproduced, except in full, without the written approval of Amber Helm Development L.C..

1.7 Endorsements

This report shall not be used to claim product endorsement by any accrediting, regulatory, or governmental agency.

1.8 Test Location

The EUT was fully tested by **Amber Helm Development L.C.**, 92723 Michigan Hwy-152, Sister Lakes, Michigan 49047 USA. Table 1 lists all sites employed herein. Specific test sites utilized are also listed in the test results sections of this report.

Table 1: Test Site List.

Description	Location	Quality Num.
OATS (3m & 10m)	92723 Michigan Hwy-152, Sister Lakes, Michigan 49047 USA	OATSA

1.9 Traceability and Equipment Used

Pertinent test equipment used for measurements at this facility is listed in Table 2. The quality system employed at Amber Helm Development L.C. has been established to ensure all equipment has a clearly identifiable classification, calibration expiry date, and that all calibrations are traceable to the SI through NIST, other recognized national laboratories, accepted fundamental or natural physical constants, ratio type of calibration, or by comparison to consensus standards.

Table 2: Equipment List.

Description	Manufacturer/Model	SN	Quality Num.	Last Cal By / Date Due
Spectrum Analyzer	Rohde & Schwarz / FSV30	101660	RSFSV30001	RS / Apr-2019
Shielded Loop Antenna	EMCO / 6502	9502-2926	EMCOLOOP1	Lib. Labs. / Aug-2018
BiconiLog Antenna	EMCO / 3142	1169	BILO3142	Lib.Labs / May-2018
(3m) RG8 Coax	CS-3227 / CS-3227	C060914	CS3227	AHD / Sept-2018
EMI Receiver	HP / 85460A/85462A	3704A00422, 3807A00465	HP8546A	Techmaster / Apr-2018
(3m) LMR-400 Coax	AHD / LMR400	C090804	LMR400	AHD / Sept-2018
(LCI) DS Coax	AHD / RG58/U	920809	RG58U	AHD / Jul-2018
(10-m) Amelco Coax	AHD / RG213U	9903-10ab	RG213U	AHD / Sept-2018
Double Ridged Horn	EMCO / 3115	2788	RH3115	Lib.Labs. / July-2018
Double Ridged Horn	Cobham / H-1798	190	RHCOB1840	Lib.Labs. / Jul 2018

2 Test Specifications and Procedures

2.1 Test Specification and General Procedures

The ultimate goal of DENSO Corporation is to demonstrate that the Equipment Under Test (EUT) complies with the Rules and/or Directives below. Detailed in this report are the results of testing the DENSO Corporation S2NA0 for compliance to:

Country/Region	Rules or Directive	Referenced Section(s)
United States	Code of Federal Regulations	CFR Title 47, Part 15.247
Canada	ISED Canada	ISED RSS-247v2/GENv4

It has been determined that the equipment under test is subject to the rules and directives above at the date of this testing. In conjunction with these rules and directives, the following specifications and procedures are followed herein to demonstrate compliance (in whole or in part) with these regulations.

ANSI C63.4:2014	"Methods of Measurement of Radio-Noise Emissions from Low-Voltage Electrical and Electronic Equipment in the Range of 9 kHz to 40 GHz"
ANSI C63.10:2013 (USA)	"American National Standard of Procedures for Compliance Testing of Unlicensed Wireless Devices"
FCC-KDB 558074 v04	"Guidance for Performing Compliance Measurements on Digital Transmission Systems (DTS) Operating Under 15.247"
FCC-KDB 913591 2007	"Measurement of radiated emissions at the edge of the band for a Part 15 RF Device"
CFR 47 2.1091/1093-GEN	"447498 D01 General RF Exposure Guidance v06: RF Exposure Procedures and Equipment Authorization Policies for Mobile and Portable Devices"
CFR 47 2.1091/1093-WPT	"680106 D01 RF Exposure Wireless Charging Apps v02: RF Exposure Considerations for Low Power Consumer Wireless Power Transfer Applications"
TP0102RA	"AHD Internal Document TP0102 - Radiated Emissions Test Procedure"
ISED Canada	"The Measurement of Occupied Bandwidth"
ICES-003; Issue 6 (2016)	"Information Technology Equipment (ITE) Limits and methods of measuremen"
ISED Canada RSS-102	"Radio Frequency (RF) Exposure Compliance of Radiocommunication Apparatus (All Frequency Bands)"
ISED Canada SPR-002	"Supplementary Procedure for Assessing Compliance with RSS-102 Nerve Stimulation Exposure Limits."

3 Configuration and Identification of the Equipment Under Test

3.1 Description and Declarations

The EUT is a BLE module. The EUT is approximately 9 x 7 x c cm in dimension, and is depicted in Figure 1. It is powered by 13.4 VDC vehicular power system. This device is a BLE module used in a motor vehicle Table 3 outlines provider declared EUT specifications.

Figure 1: Photos of EUT.

Table 3: EUT Declarations.

General Declarations			
Equipment Type:	DTS module	**Country of Origin:**	USA
Nominal Supply:	13.4 VDC	**Oper. Temp Range:**	Not Declared
Frequency Range:	2402 – 2480 MHz	**Antenna Dimension:**	Not Declared
Antenna Type:	PCB Trace	**Antenna Gain:**	Not Declared
Number of Channels:	40	**Channel Spacing:**	2 MHz
Alignment Range:	Not Declared	**Type of Modulation:**	GFSK
United States			
FCC ID Number:	HYQS2NA0	**Classification:**	DTS
Canada			
IC Number:	1551A-S2NA0	**Classification:**	Spread Spectrum

3.1.1 EUT Configuration

The EUT is configured for testing as depicted in Figure 2.

3.1.2 Modes of Operation

The EUT is capable of two modulations, BLE 1MBps and 2 MBPs GFSK modulation. Both modes are tested herein. Test samples were programmed for low, middle, high channels and worst-case data rates via UART interface and TiSmartStudio test software.

3.1.3 Variants

There is only a single variant of the EUT, as tested.

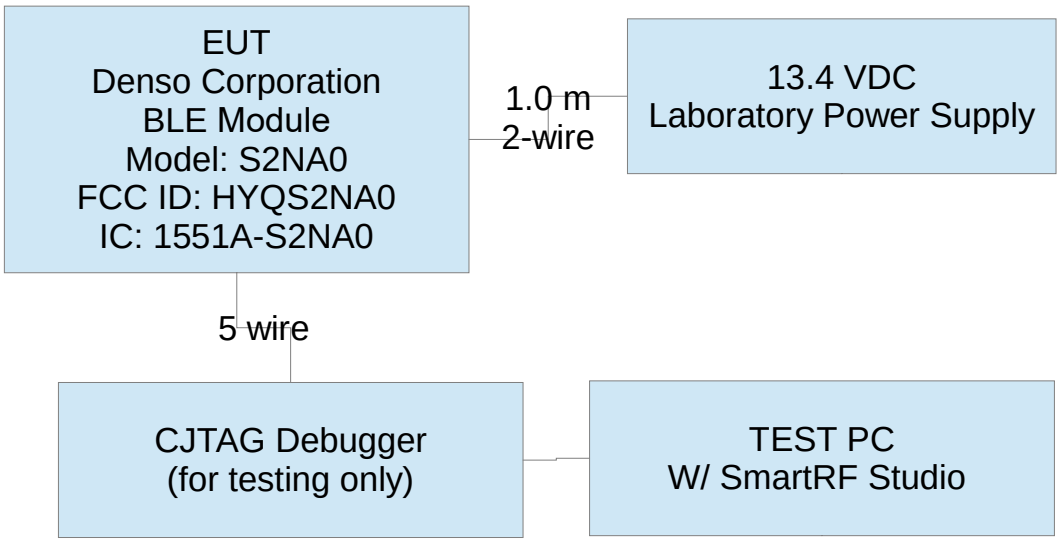

Figure 2: EUT Test Configuration Diagram.

3.1.4 Test Samples

Three samples in total were provided. One radiated emissions sample and two samples with the antenna replaced by an RF connector for conducted emissions testing. All samples were modified by manufacturer to allow test software programming.

3.1.5 Functional Exerciser

Normal operating EUT functionality was verified by observation of transmitted signal.

3.1.6 Modifications Made

There were no modifications made to the EUT by this laboratory.

3.1.7 Production Intent

The EUT appears to employ a production ready PCB.

3.1.8 Declared Exemptions and Additional Product Notes

The EUT is permanently installed in a transportation vehicle. As such, digital emissions are exempt from US and Canadian digital emissions regulations (per FCC 15.103(a) and IC correspondence on ICES-003).

4 Emissions

4.1 General Test Procedures

4.1.1 Radiated Test Setup and Procedures

Radiated electromagnetic emissions from the EUT are first pre-scanned in our screen room. Spectrum and modulation characteristics of all emissions are recorded. Instrumentation, including spectrum analyzers and other test equipment as detailed in Section 1.8 are employed. After pre-scan, emission measurements are made on the test site of record. If the EUT connects to auxiliary equipment and is table or floor standing, the configurations prescribed in relevant test standards are followed. Alternatively, a layout closest to normal use (as declared by the provider) is employed if the resulting emissions appear to be worst-case in such a configuration. See Figure 3. All intentionally radiating elements that are not fixed-mounted in use are placed on the test table lying flat, on their side, and on their end (3-axes) and the resulting worst case emissions are recorded. If the EUT is fixed-mounted in use, measurements are made with the device oriented in the manner consistent with installation and then emissions are recorded. If the EUT exhibits spurious emissions due to internal receiver circuitry, such emissions are measured with an appropriate carrier signal applied.

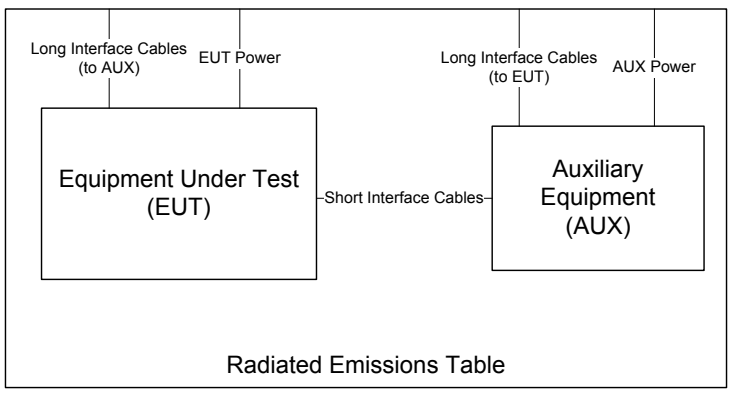

Figure 3: Radiated Emissions Diagram of the EUT.

For devices with intentional emissions below 30 MHz, a shielded loop antenna and/or E-field and H-Field broadband probes are used depending on the regulations. Shielded loops are placed at a 1 meter receive height at the desired measurement distance. For exposure in this band, the broadband probes employed are 10cm diameter single-axis shielded transducers and measurements are repeated and summed over three axes.

Emissions between 30 MHz and 1 GHz are measured using calibrated broadband antennas. For both horizontal and vertical polarizations, the test antenna is raised and lowered from 1 to 4 m in height until a maximum emission level is detected. The EUT is then rotated through 360° in azimuth until the highest emission is detected. The test antenna is then raised and lowered one last time from 1 to 4 m and the worst case value is recorded. Emissions above 1 GHz are characterized using standard gain or broadband ridge-horn antennas on our OATS with a 4×5 m rectangle of ECCOSORB absorber covering the OATS ground screen and a 1.5m table height. Care is taken to ensure that test receiver resolution and video bandwidths meet the regulatory requirements, and that the emission bandwidth of the EUT is not reduced. Photographs of the test setup employed are depicted in Figure 4.

Where regulations allow for direct measurement of field strength, power values (dBm) measured on the test receiver / analyzer are converted to dBμV/m at the regulatory distance, using

$$E_{dist} = 107 + P_R + K_A - K_G + K_E - C_F$$

where P_R is the power recorded on spectrum analyzer, in dBm, K_A is the test antenna factor in dB/m, K_G is the combined pre-amplifier gain and cable loss in dB, K_E is duty correction factor (when applicable) in dB, and C_F is a distance conversion (employed only if limits are specified at alternate distance) in dB. This field strength value is then compared with the regulatory limit. If effective isotropic radiated power (EIRP) is computed, it is computed as

$$EIRP(dBm) = E_{3m}(dB\mu V/m) - 95.2.$$

When presenting data at each frequency, the highest measured emission under all possible EUT orientations (3-axes) is reported.

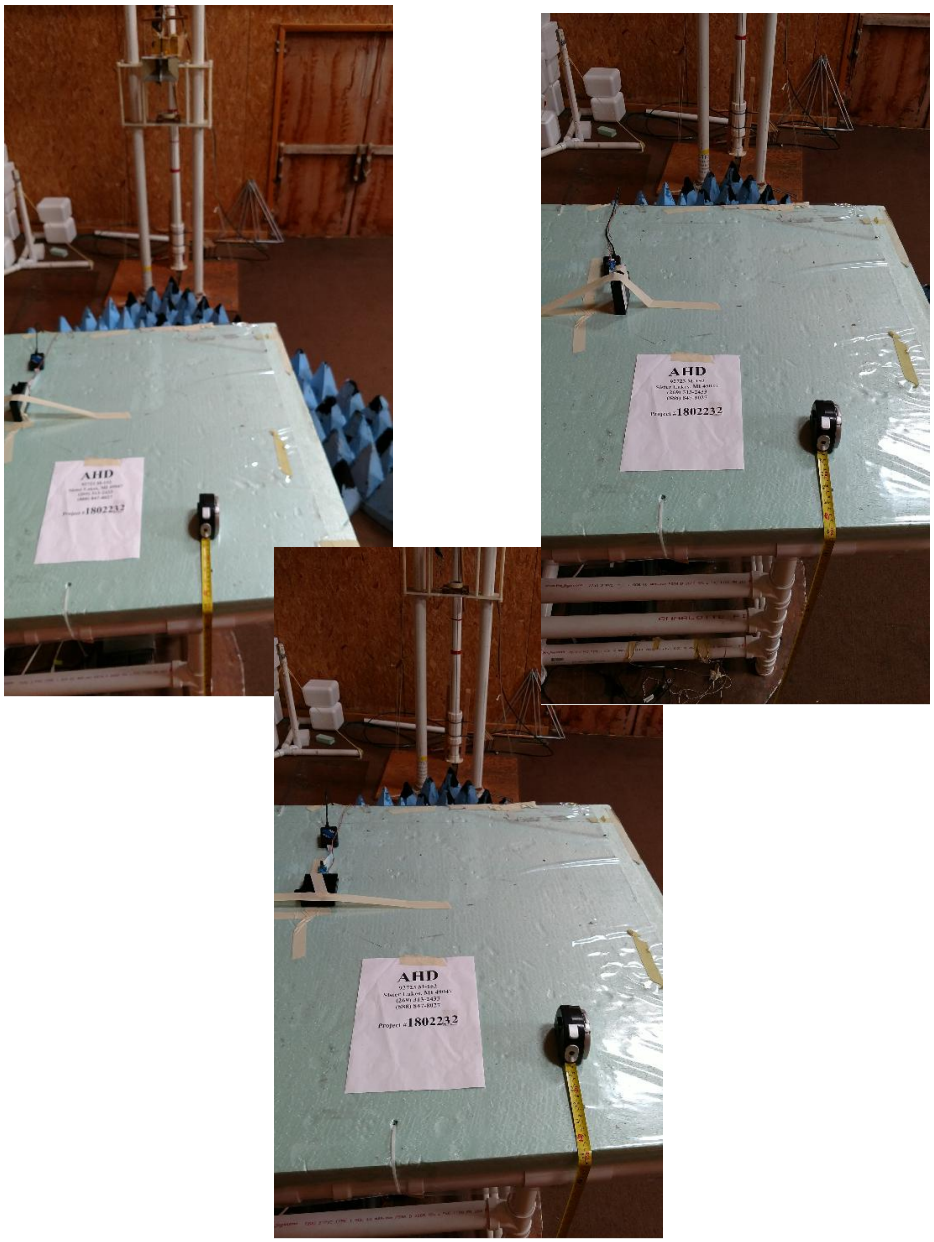

Figure 4: Radiated Emissions Test Setup Photograph(s).

4.1.2 Conducted Emissions Test Setup and Procedures

4.1.3 Power Supply Variation

Tests at extreme supply voltages are made if required by the the procedures specified in the test standard, and results of this testing are detailed in this report.

4.2 Intentional Emissions

4.2.1 Duty and Transmission Cycle, Pulsed Operation

The details and results of testing the EUT for pulsed operation are summarized in Table 4.

Table 4: Pulsed Emission Characteristics (Duty Cycle).

Frequency Range	Det	IFBW	VBW		
f > 1 000 MHz	Pk	3 MHz	5 MHz	**Test Date:**	4-Mar-18
				Test Engineer:	Joseph Brunett
				EUT	Denso BLE
				Meas. Distance:	Conducted

Pulsed Operation / Duty Cycle								
Transmit Mode	Symbol Rate (Msym/s)	Data Rate (Mbps)	Voltage (V)	Oper. Freq (MHz)	Tx Cycle Time* (ms)	On-Time* (ms)	Duty Cycle (%)	Power Duty Correction (dB)
Cont. Modulating	1.000	1 Mbps	13.4	2440.0	-	-	-	0.0
	2.000	2 Mbps	13.4	2440.0	-	-	-	0.0

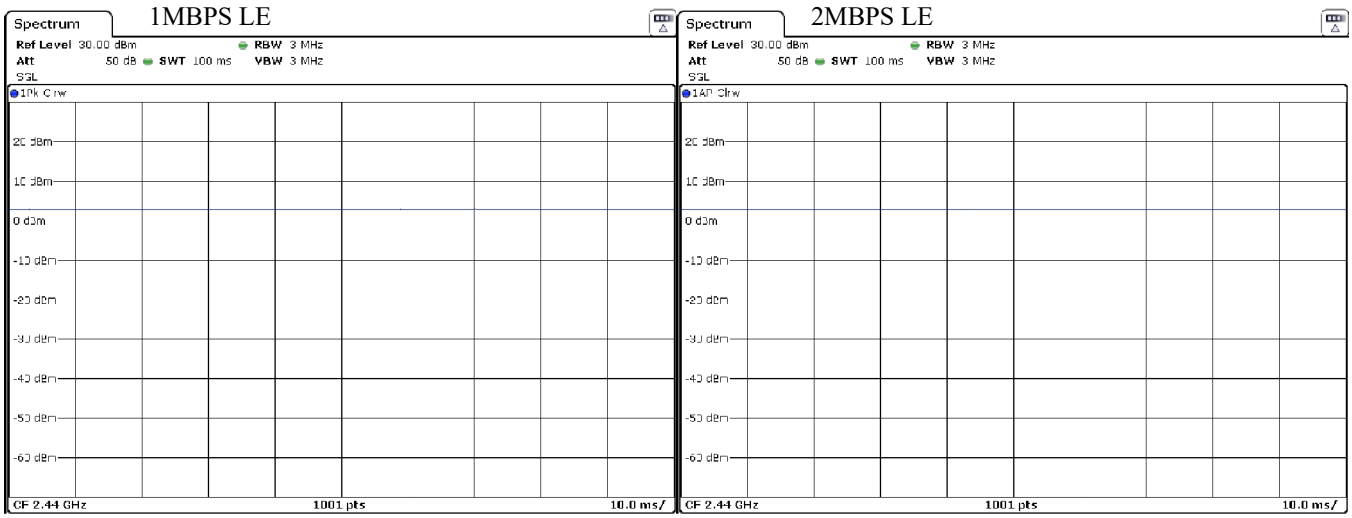

Figure 5: Pulsed Emission Characteristics (Duty Cycle).

4.2.2 Fundamental Emission Bandwidth

Emission bandwidth (EBW) of the EUT is measured with the device placed in the test mode(s) with the shortest available packet length and minimum packet spacing. Radiated emissions are recorded following the test procedures listed in Section 2.1. The 6 dB bandwidth is measured for the lowest, middle, and highest channels available. The 99% emission bandwidth per IC test procedures is also reported.The results of this testing are summarized in Table 5. Plots showing measurements employed obtain the emission bandwidths reported are provided in Figure 6.

Table 5: Intentional Emission Bandwidth.

Frequency Range	Det	IFBW	VBW
f > 1 000 MHz	Pk	50 kHz	200 kHz

Test Date:	03/04/18
Test Engineer:	Joseph Brunett
EUT	Denso BLE
Meas. Distance:	Conducted

Occupied Bandwidth									
Transmit Mode	Symbol Rate (Msym/s)	Data Rate (Mbps)	Voltage (V)	Oper. Freq (MHz)	6 dB BW (MHz)	6 dB BW Limit (MHz)	99% OBW (MHz)	20 dB BW (MHz)	Pass/Fail
Cont. Modulating	1.0	1.0	13.4	2402.0	0.705	0.500	1.045	1.219	Pass
				2440.0	0.745	0.500	1.064	1.065	Pass
				2480.0	0.745	0.500	1.064	1.234	Pass
Cont. Modulating	2.0	2.0	13.4	2402.0	1.214	0.500	2.054	2.304	Pass
				2440.0	1.267	0.500	2.089	2.321	Pass
				2480.0	1.322	0.500	2.081	2.351	Pass

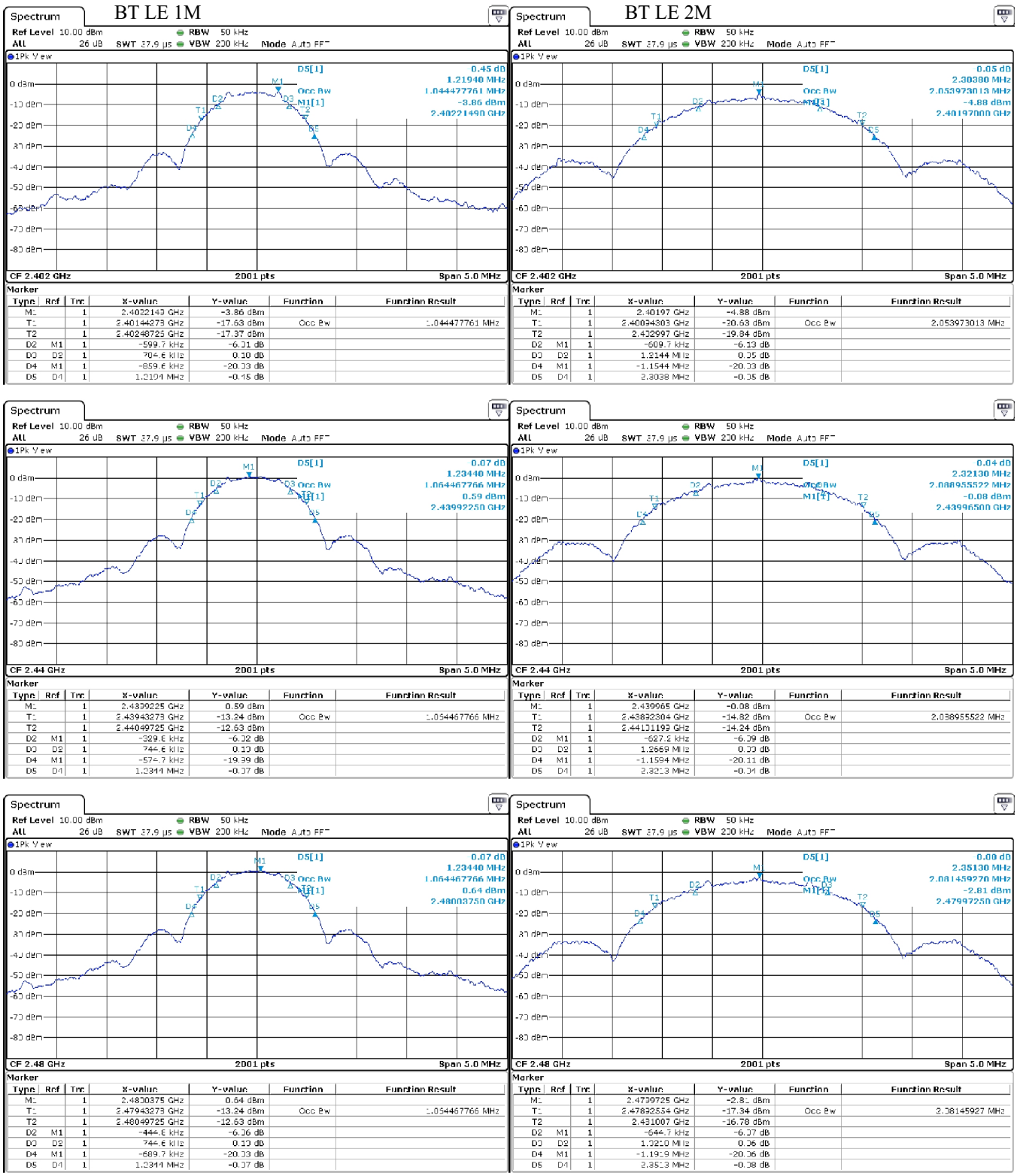

Figure 6: Intentional Emission Bandwidth.

4.2.3 Effective Isotropic Radiated Power

The EUT's radiated power is computed from field strength measurements made at 3 meters from the EUT. The test receiver bandwidth was set to be greater than the measured emission bandwidth of the EUT to capture the true peak. The results of this testing are summarized in Table 6.

Table 6: Effective Isotropic Radiated Power Results.

Frequency Range	**Det**	**IF Bandwidth**	**Video Bandwidth**		
f > 1 000 MHz	Pk/Avg	3 MHz	10 MHz	**Test Date:**	8-Mar-18
				Test Engineer:	Gordon Helm
				EUT:	Denso BLE
				Meas. Distance:	3m

FCC/IC

#	Mode	Channel	Freq. MHz	Ant. Used	Ant. Pol.	Table Azim. deg	Ant Height m	Ka dB/m	Kg dB	E3(Pk) dBμV/m	EIRP (Pk) dBm	Pout* (Pk) dBm	Ant Gain dBi	EIRP (Avg) Limit dBm	Pass dB
1	CW	L	2402.0	RH3115	H/V	220.0	3.0	28.9	-2.3	93.5	-1.7	**0.2**	-1.9	30.0	31.7
2		M	2440.0	RH3115	H/V	30.0	2.9	29.0	-2.4	95.4	.2	4.8	-4.6	30.0	**29.8**
3		H	2480.0	RH3115	H/V	30.0	2.9	29.1	-2.4	92.3	-2.9	2.5	-5.4	30.0	32.9
4															

#	Mode	Channel	Freq. MHz	Supply Voltage	Ant. Pol.	Table Azim. deg	Ant Height m	Ka dB/m	Kg dB	EIRP (Pk) dBm					
5	CW	M	2440.0	18.0	H/V	rel	rel	29.0	-2.4	95.4					
6			2440.0	15.0	H/V	rel	rel	29.0	-2.4	95.4					
7			2440.0	13.4	H/V	30.0	2.9	29.0	-2.4	95.4					
8			2440.0	9.0	H/V	rel	rel	29.0	-2.4	95.4					
9															

* Measured conducted from the radio using conducted test sample.

** Measured radiated at 3 meter distance. Peak power measured with IFBW > OBW per DTS Procedures 9.1.1 RBW > DTS bandwidth

4.2.4 Power Spectral Density

For this test, field strength emissions are made at 3 meters with the EUT oriented for maximum emission. The spectrum is first scanned for maximum spectral peaks, the span and receiver bandwidth are then reduced until the power spectral density in field strength is measured in the prescribed receiver bandwidth. A sweep time of 100 seconds is maintained to ensure peak signals are captured in each frequency bin. The results of this testing are summarized in Table 7. Plots showing how these measurements were made are depicted in Figure 7.

Table 7: Power Spectral Density Results.

Frequency Range	**Detector**	**IF Bandwidth**	**Video Bandwidth**	**Test Date:**	4-Mar-18
2400-2483.5	Pk	3 kHz	10 kHz	**Test Engineer:**	Joseph Brunett
				EUT:	Denso BLE
	Equipment Used:	RSFSV30001		**Meas. Distance:**	Conducted

						FCC/IC
Mode	Channel	Frequency (MHz)	Ant. Used	PSDcond (meas)* (dBm/3kHz)	PSD Limit (dBm/3kHz)	Pass By (dB)
1MBps LE GFSK	L	2402.0	Cond.	-12.0	8.00	20.0
	M	2440.0	Cond.	-7.7	8.00	15.7
	H	2480.0	Cond.	-9.4	8.00	17.4
2MBps LE GFSK	L	2402.0	Cond.	-14.1	8.00	22.1
	M	2440.0	Cond.	-9.4	8.00	17.4
	H	2480.0	Cond.	-11.7	8.00	19.7

* PSD measured conducted out the the EUT antenna port following FCC DTS PKPSD procedure.

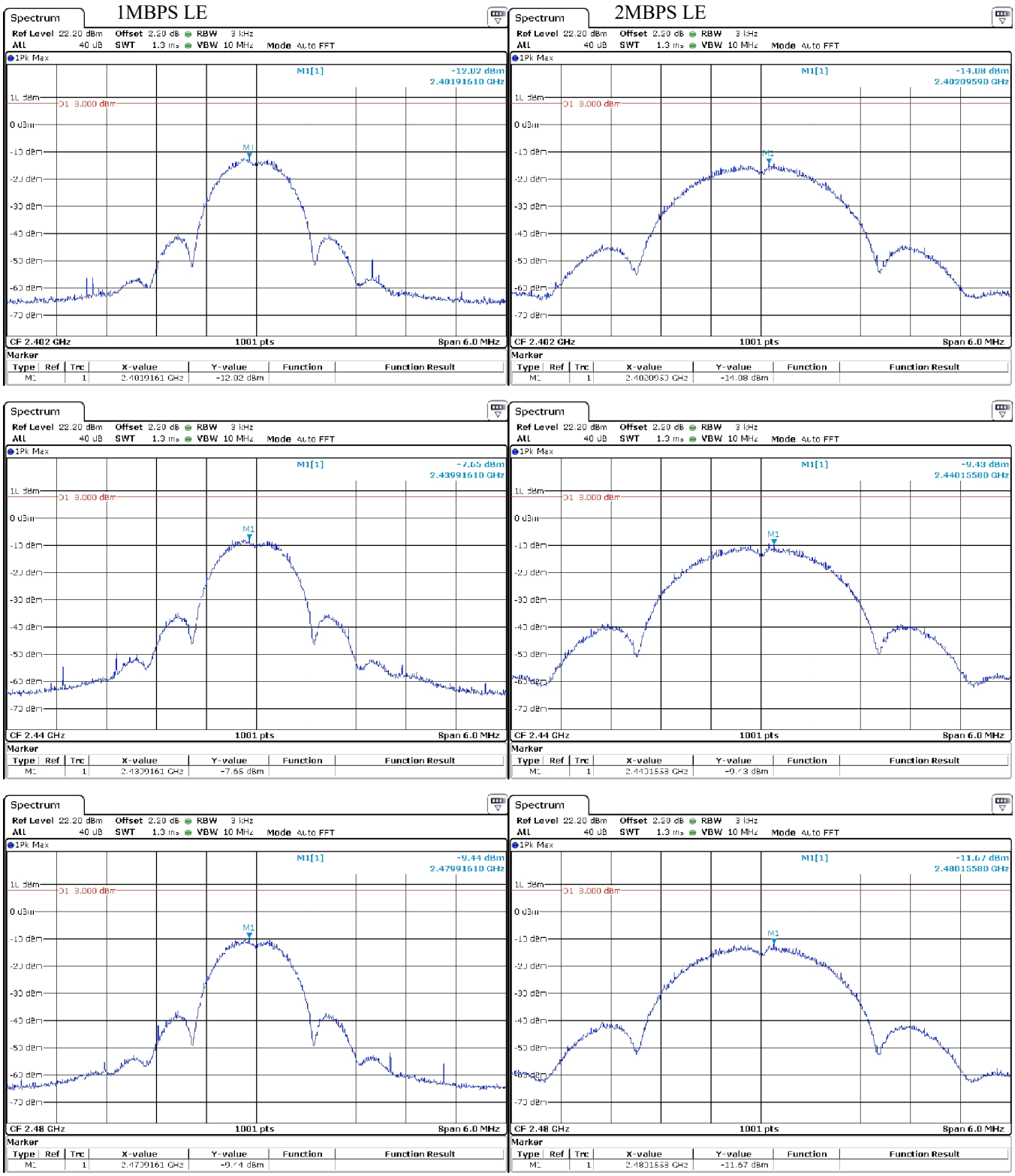

Figure 7: Power Spectral Density Plots.

4.3 Unintentional Emissions

4.3.1 Transmit Chain Spurious Emissions

The results for the measurement of transmit chain spurious emissions at the nominal voltage and temperature are provided in Table 8. Measurements are performed to 10 times the highest fundamental operating frequency.

Table 8: Transmit Chain Spurious Emissions.

Frequency Range	Det	IF Bandwidth	Video Bandwidth
25 MHz ≤ f ≤ 1 000 MHz	Pk/QPk	120 kHz	300 kHz
f > 1 000 MHz	Pk/Avg	1 MHz	3 MHz

Test Date:	3/8/2018, 3/10/2018
Test Engineer:	G. Helm, J. Brunett
EUT:	Denso BLE
Mode:	Modulated (BE+SPUR) / CW (HARM)
Meas. Distance:	3m

														FCC/IC
#	Freq. Start MHz	Freq. Stop MHz	Ant. Used	Ant. Pol.	Table Azim. deg	Ant Height m	Ka dB/m	Kg dB	E3(Pk) dBμV/m	E3 Pk Lim dBμV/m	E3(Avg) dBμV/m	E3 Avg Lim dBμV/m	Pass dB	Comments
1	Fundamental Restricted Band Edge (Low Side)													
2	2390.0	2390.0	SINGQR	H/V	30	2.9	28.9	-2.3	49.8	74.0	38.0	54.0	16.1	all channels; 1MBps; noise
3	2390.0	2390.0	SINGQR	H/V	30	2.9	28.9	-2.3	48.7	74.0	38.0	54.0	16.0	all channels; 2MBps; noise
4	Fundamental Restricted Band Edge (High Side)													
	2483.5	2483.5	SINGQR	H/V	30	2.9	29.1	-2.4	49.8	74.0	39.8	54.0	14.2	all channels; 1MBps; noise
	2483.5	2483.5	SINGQR	H/V	30	2.9	29.1	-2.4	52.6	74.0	42.5	54.0	11.5	all channels; 2MBps
5	Harmonic / Spurious Emissions**													
6	4804.0	4804.0	RH3115	H/V	190	2.1	33.1	-3.5	31.0	74.0		54.0	23.0	max all, CW
7	4880.0	4805.0	RH3115	H/V	100	2.4	33.1	-3.6	37.3	74.0		54.0	16.7	max all, CW
8	4960.0	4806.0	RH3115	H/V	100	2.4	33.1	-3.6	34.4	74.0		54.0	19.6	max all, CW
9	4000.0	6000.0	RH3115	H/V	100	2.4	35.0	-3.1	37.3	74.0		54.0	16.7	all channels; max all, CW
10	7206.0	7206.0	RH3115	H/V	100	2.4	36.7	-4.5	43.8	74.0		54.0	10.2	max all, CW, noise
11	7320.0	7320.0	RH3115	H/V	100	2.4	36.9	-4.6	43.9	74.0		54.0	10.1	max all, CW, noise
12	7440.0	7440.0	RH3115	H/V	100	2.4	37.0	-4.6	44.1	74.0		54.0	9.9	max all, CW, noise
13	6000.0	8400.0	RH3115	H/V	100	2.4	37.6	-4.1	44.1	74.0		54.0	9.9	max all, CW, noise
14	8400.0	12500.0	RH3115	H/V	100	2.4	40.5	-4.9	41.5	74.0		54.0	12.5	max all, CW, noise
15	12500.0	18000.0	RH3115	H/V	100	2.4	45.2	-6.1	35.3	74.0		54.0	18.7	max all, CW, noise
16	18000.0	26000.0	RHCOB1840	H/V	100	2.4	53.0	-7.4	33.9	74.0		54.0	20.1	max all, CW, noise
17														
18														

*Avg measurements made employing average detector.

** No other spurious emissions from the EUT were observed within 20 dB of the regulatory limit.

4.3.2 Relative Transmit Chain Spurious Emissions

The results for the measurement of transmit chain spurious emissions relative to the fundamental in a 100 kHz receiver bandwidth (at the nominal voltage and temperature) are provided in Figure 8 below.

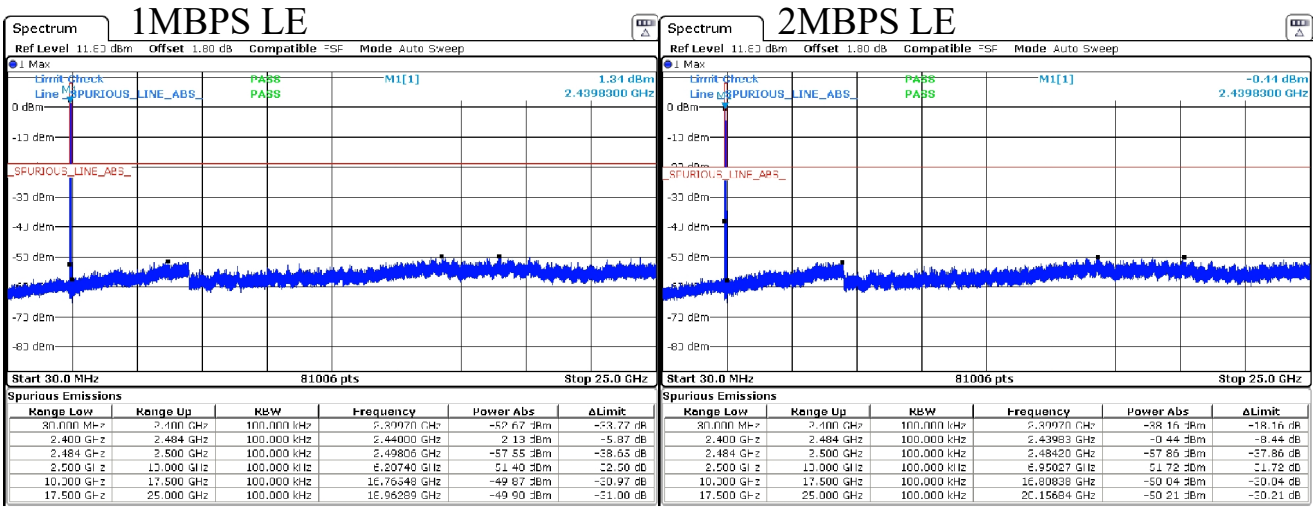

Figure 8: Conducted Transmitter Emissions Measured.

4.4 RF Exposure

4.4.1 Exposure and Potential Health Hazard

To demonstrate compliance with regulations that place limitations on human electromagnetic field exposure for both the general public and for workers, we compute EIRP from measured emission data. These levels are compared with limits placed by the directives and recommendations detailed in Section 2.1. Table 9 details the results of these computations.

Table 9: Electromagnetic Field Exposure.

USA REF: 1.1310, 2.1091/1093, 447498 D01 General RF Exposure Guidance v06
IC REF: RSS-102 Issue 5, Safety Code 6
Min. Sep. Distance: 20 cm (Mobile)

Test Date: 8-Mar-18
Test Engineer: Gordon Helm
EUT: Denso BLE
EUT Mode: Worst Case
Meas. Distance: 3 meters

					Canada ISED RSS-102 MPE			USA FCC 1.1310 MPE		
Mode	Freq. MHz	Worst Case E3(Avg)* dBuV/m	E20cm(Avg) dBuV/m	H20cm(Avg) dBuA/m	SC6 Limit (E20cm) dBuV/m	SC6 Limit (H20cm) dBuA/m	Worst Case MPE Ratio	E20cm Limit*** dBuV/m	H20cm Limit*** dBuA/m	Worst Case MPE Ratio
Mode	Freq. MHz	Worst Case EIRP(Avg)** dBm	E20cm(Avg) dBuV/m	S20cm(Avg)**** mW/cm2		SC6 Limit (S20cm) mW/cm2	MPE Ratio		S Limit mW/cm2	MPE Ratio
CW	2402.00	0.2	118.9	0.00021		5.5	.0000		1.00000	.0002
CW	2440.00	4.8	123.5	0.00060		5.5	.0001		1.00000	.0006
CW	2480.00	2.5	121.2	0.00035		5.5	.0001		1.00000	.0004
						MPE Total (<1):	**.0001**		**MPE Total (<1):**	**.0006**
						Complies?	**Yes**		Complies?	**Yes**

*As Measured / Computed from highest fundamental emission, see fundamental emission section of this report.
**maximum of either EIRP or Pout as measured.
*** For FCC MPE, use of 300 kHz limit for signals below 300 kHz as previously requested by FCC.
**** EIRP (mW) = S (mW/cm^2) x 4 x PI x 20cm^2

5 Measurement Uncertainty and Accreditation Documents

The maximum values of measurement uncertainty for the laboratory test equipment and facilities associated with each test are given in the table below. This uncertainty is computed for a 95.45% confidence level based on a coverage factor of $k = 2$.

Table 10: Measurement Uncertainty.

Measured Parameter	Measurement Uncertainty†
Radio Frequency	$\pm(f_{Mkr}/10^7 + RBW/10 + (SPN/(PTS-1))/2 + 1\,\text{Hz})$
Conducted Emm. Amplitude	$\pm 1.9\,\text{dB}$
Radiated Emm. Amplitude ($30 - 200\,\text{MHz}$)	$\pm 4.0\,\text{dB}$
Radiated Emm. Amplitude ($200 - 1000\,\text{MHz}$)	$\pm 5.2\,\text{dB}$
Radiated Emm. Amplitude ($f > 1000\,\text{MHz}$)	$\pm 3.7\,\text{dB}$

†Ref: CISPR 16-4-2:2011+A1:2014

United States Department of Commerce
National Institute of Standards and Technology

NVLAP®

Certificate of Accreditation to ISO/IEC 17025:2005

NVLAP LAB CODE: 200129-0

AHD (Amber Helm Development, L.C.)
Sister Lakes, MI

is accredited by the National Voluntary Laboratory Accreditation Program for specific services, listed on the Scope of Accreditation, for:

Electromagnetic Compatibility & Telecommunications

This laboratory is accredited in accordance with the recognized International Standard ISO/IEC 17025:2005. This accreditation demonstrates technical competence for a defined scope and the operation of a laboratory quality management system (refer to joint ISO-ILAC-IAF Communique dated January 2009).

2017-06-28 through 2018-06-30
Effective Dates

For the National Voluntary Laboratory Accreditation Program

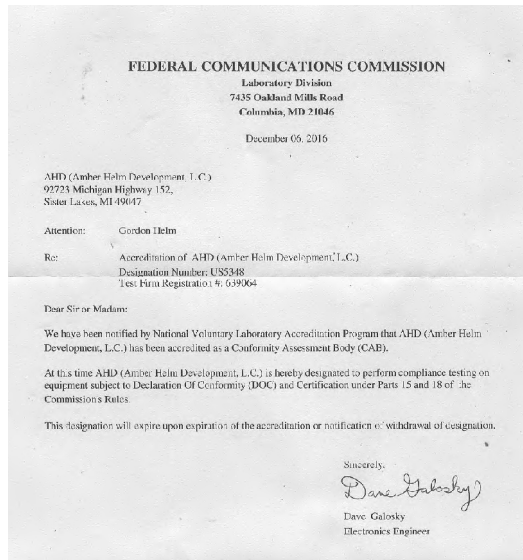
FEDERAL COMMUNICATIONS COMMISSION
Laboratory Division
7435 Oakland Mills Road
Columbia, MD 21046

December 06, 2016

AHD (Amber Helm Development, L.C.)
92723 Michigan Highway 152,
Sister Lakes, MI 49047

Attention: Gordon Helm

Re: Accreditation of AHD (Amber Helm Development, L.C.)
Designation Number: US5348
Test Firm Registration #: 639064

Dear Sir or Madam:

We have been notified by National Voluntary Laboratory Accreditation Program that AHD (Amber Helm Development, L.C.) has been accredited as a Conformity Assessment Body (CAB).

At this time AHD (Amber Helm Development, L.C.) is hereby designated to perform compliance testing on equipment subject to Declaration Of Conformity (DOC) and Certification under Parts 15 and 18 of the Commission's Rules.

This designation will expire upon expiration of the accreditation or notification of withdrawal of designation.

Sincerely,

Dave Galosky
Electronics Engineer

Figure 9: Accreditation Documents