orinoco™

Lucent Technologies
Bell Labs Innovations

Outdoor Antenna Installation Guide

ORiNOCO Outdoor Router

You can find the latest software & documentation at:
http://www.lucent.com/orinoco

012706/C November 2000
Copyright © 2000 Lucent Technologies Inc. All Rights Reserved

About this Document

The product described in this book is a licensed product of Lucent Technologies Inc.

- ORiNOCO, WaveLAN, WaveACCESS, WavePOINT and WaveMANAGER are registered trademarks or trademarks of Lucent Technologies Inc.
- Microsoft MS-Windows and MS-DOS are registered trademarks or trademarks of Microsoft Corporation.
- Adobe Acrobat is a registered trademark of Adobe Systems Inc.

All other brand and product names are trademarks or registered trademarks of their respective holders.

This Document was created by:

Lucent Technologies Nederland B.V.
Wireless Communications & Networking Division (WCND)
P.O. Box 755
3430 AT Nieuwegein
The Netherlands

An electronic copy of this document is also available on the enclosed software CD-ROM. Updates of this document can be downloaded from the ORiNOCO Library on the World Wide Web at **http://www.lucent.com/orinoco**.
To view or print the electronic document, in Adobe's Portable Document Format (PDF), you will need the Adobe Acrobat Reader®, included on the enclosed Software CD-ROM.
Alternatively, consult the Adobe website at: **http://www.adobe.com**.

November 6, 2000

It is the policy of Lucent Technologies to improve products as new technology, components, software, and firmware become available. Lucent Technologies, therefore, reserves the right to change specifications without prior notice.
All features, functions, and operations described herein may not be marketed by Lucent Technologies in all parts of the world. In some instances, drawings are of equipment prototypes. Therefore, before using this document, consult your Lucent Technologies representative or Lucent Technologies office for information that is applicable and current.

Copyright ©2000 Lucent Technologies Inc., All Rights Reserved

Table of Contents

1 Welcome 1-1

About This Guide 1-1

- Who Should Use This Guide 1-1
- Finding Additional Information 1-2

About ORiNOCO Outdoor Router 1-4

2 Preparing for Installation 2-1

Site Prerequisites 2-1

Overview of the Indoor Installation 2-2

- Outdoor Router Hardware 2-2
- Cable System 2-5

Overview of the Outdoor Installation 2-8

- Antenna Placement 2-8
- Antenna Mast/Wall Bracket 2-11
- Grounding System 2-12
- Antenna Cable Routing 2-14

Before Climbing the Roof... 2-15

3 Determine Range & Clearance 3-1

Introduction 3-1

Determine the Outdoor Range 3-2

- Determine the Maximum Range 3-3
- Determine the Cable Factor 3-7
- Determine the Clearance Factor 3-8

Examples 3-13
- Point-to-Point Links 3-13
- Point-to-MultiPoint Links 3-15

4 Installing the Antenna 4-1

Planning Antenna Installation 4-1
- Safety Precautions 4-1
- Installation Overview 4-3

Mounting the Antenna 4-5

Connecting the Antenna Cable 4-6
- Sealing the Cable Connectors 4-7

A The Antenna Cabling System A-1

The Outdoor Cabling Components A-1
- Selecting the Correct Connector-Type A-2

ORiNOCO Cable Assembly A-6

ORiNOCO Surge Arrester A-7

Low-Loss Antenna Cable A-9

B 14 dBi Directional Antenna B-1

General Description B-1
- Contents of the Antenna Box B-1
- Mounting the Directional Antenna B-1

C 7 dBi Omni-Directional Base Station Antenna C-1

Hardware Specifications C-1
- Mounting the Omni-directional Antenna C-1

D 10 dBi Omni-Directional Base Station Antenna D-1

Hardware Specifications D-1

- Mounting Instructions D-1

E 12 dBi Directional Wide Angle Antenna E-1

Hardware Specifications E-1

- Mounting Instructions E-1

F 24 dBi Directional Parabolic Grid Antenna F-1

Hardware Specifications F-1

- Kit Contents F-2
- Assembling the Antenna F-2
- Mounting the Antenna F-4

G	**Certified Outdoor Solutions**	G-1
	Introduction	G-1
	Selecting the Right Card & Cables	G-3
	Regulatory Information	G-7
H	**Support & Warranty**	H-1
	Technical Support	H-1
	Warranty and Repair	H-2
	Index	IX-1
	List of Figures	LOF-1
	List of Tables	LOT-1

Welcome

1

Contents

About This Guide **1-1**

Who Should Use This Guide 1-1
Finding Additional Information 1-2
- Installing Outdoor Router Hardware 1-2
- Configuration and Management 1-2
- Context-Sensitive Help 1-3
- Hardware Specifications 1-3
- Additional files on your Software CD-ROM 1-3
- Other Sources of Information 1-3

About ORiNOCO Outdoor Router **1-4**

- ORiNOCO Remote Outdoor Router 1-4
- ORiNOCO Central Outdoor Router 1-5
- Upgrading the ORiNOCO Outdoor Router 1-6

Welcome

1

About This Guide

This ORiNOCO Outdoor Antenna Installation Guide explains how to install and set-up an outdoor antenna installation based on ORiNOCO PC Cards that will be used in combination with:

- ORiNOCO Outdoor Router products[1]
- ORiNOCO Client products

There is also a chapter about verifying the wireless link quality and correcting problems that might arise during installation or operation.

This guide does not explain how to erect antenna masts, or how to install a safety grounding system. These are pre-requisites that must be in place before the directional antenna is installed.

Who Should Use This Guide

The installation of Outdoor Antenna Links requires technical expertise. At the very least, you should be able to:

- Install and configure the network components, such as the Outdoor Router and the ORiNOCO LAN administrator's station.
- Understand or have a working knowledge of the installation procedures for network operating systems under Microsoft Windows 95/98 and/or Microsoft Windows NT.
- Mount the outdoor antenna and surge arrester. Lucent Technologies recommends that the installation is performed by a qualified antenna installation service.

1 Formerly also referred to as WavePOINT-II PTP, WaveACCESS Link WP-II or WaveCAMPUS.

DANGER:
The ORiNOCO Outdoor Router outdoor antennas are intended for mounting on a roof, or the side of a building. Installation shall not be attempted by someone who is not trained or experienced in this type of work.The antenna has to be installed by a suitably trained professional installation technician or a qualified antenna installation service. The site pre-requisites have to be checked by a person familiar with the national electrical code, and other regulations governing this type of installation.

Finding Additional Information

Installing Outdoor Router Hardware

ORiNOCO outdoor antenna installations are typically connected to Outdoor Router devices. The hardware installation of these devices is described in the Getting Started Guide that is included with each Outdoor Router unit.

Configuration and Management

The configuration and management of outdoor antenna links is controlled via the OR Manager program; an MS-Windows based application that can be installed on almost any computer running Windows 95, 98 or Windows NT (v4.0).

How to install this program is described in the Getting Started Guide that is included with each Outdoor Router unit.

How to use the OR Manager program is described in:

- The “Context-Sensitive Help” as described below.
- The "ORiNOCO OR Manager - User’s Guide" provided on the software CD-ROM that came with the Outdoor Router device (inserted inside the back-side cover of the Getting Started Guide that came with your product).
- The "ORiNOCO OR Manager - User’s Guide" also describes how to monitor the performance of your wireless network, and provides hints and scenarios for troubleshooting performance degradation.

  To view and/or print these documents, you will need to install the Adobe Acrobat Reader provided on the software CD-ROM.

Context-Sensitive Help

Context-sensitive help for the OR Manager program is available by clicking the “Help” button on the screen or pressing the F1 function key.

Hardware Specifications

- Outdoor Router hardware specifications are described in the Getting Started Guide that is shipped with each device.
- Radio Frequency specifications of the Outdoor Router are described in the "ORiNOCO PC Card Getting Started".
- Hardware specifications for the outdoor antennas, the cabling system and the ORiNOCO Surge Arrester are listed in Appendices of this guide.

Additional files on your Software CD-ROM

All software CD-ROMs (or diskettes) that came with your ORiNOCO products, include a file called “readme.txt”. This file contains information about the software version and/or drivers on the diskette.

NOTE:
You are advised to print and read the “readme.txt” file prior to installing your ORiNOCO products, as it may contain additional information that was not available when this document was printed.

Other Sources of Information

All documentation listed above can be downloaded from the ORiNOCO website at: **http://www.lucent.com/orinoco**.

NOTE:
You are advised to visit the website at regular intervals for the latest available information, documentation and software updates and other ORiNOCO news.

About ORiNOCO Outdoor Router

The ORiNOCO Outdoor Router enables you to setup a wireless system that supports:

- “ORiNOCO Remote Outdoor Router” functionality, or
- “ORiNOCO Central Outdoor Router” functionality.

ORiNOCO Remote Outdoor Router

With two ORiNOCO Remote Outdoor Routers, it’s easy to setup a wireless Point-to-Point link as pictured in Figure 1-1 below.

Figure 1-1 ORiNOCO Point-to-Point Link

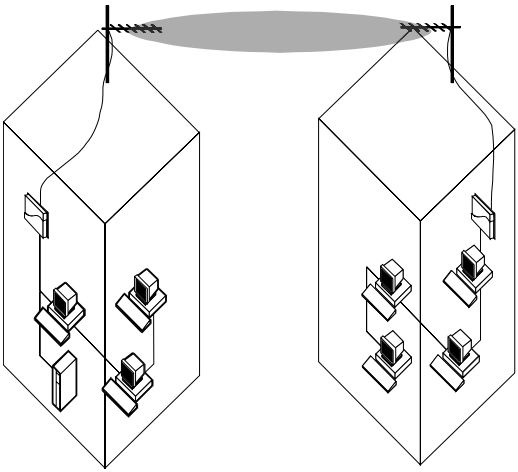

The Point-to-Point (PTP) Link functionality enables you to setup a connection between two locations as an alternative to:

- Leased lines in building-to-building connections, or
- Wired Ethernet backbones between AP-1000s in ‘hard-to-wire’ environments.

ORiNOCO Central Outdoor Router

If you wish to connect more than two buildings, you can choose to:

- Setup multiple Point-to-Point links, using multiple pairs of Remote Outdoor Router systems, or
- Setup a single Point-to-Multipoint system using a single Central Outdoor Router and multiple Remote Outdoor Routers as pictured in Figure 1-2 below.

Figure 1-2 ORiNOCO Point-to-Multipoint Link

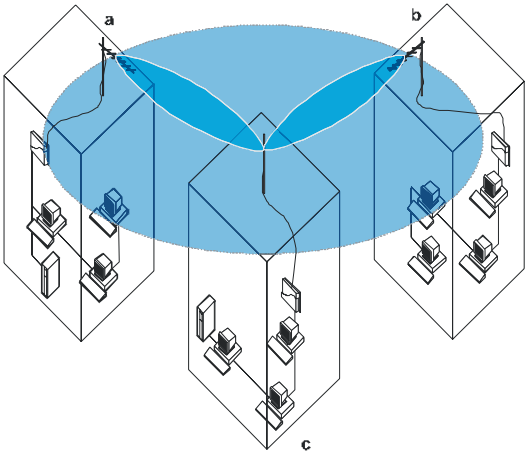

Looking at Figure 1-2 the system is designed as follows:

- The central building **c** is equipped with the Central Outdoor Router, connected to either an omni-directional, or wide angle antenna.
- The two Remote buildings **a** and **b** have both been equipped with Remote Outdoor Routers connected to directional antennas.

NOTE:
Subject to local radio regulations and legislation, the outdoor antenna solutions described in this document may not be available in all parts of the world. Consult Appendix G “Certified Outdoor Solutions” for more information.

Upgrading the ORiNOCO Outdoor Router

If you wish to extend the features of previously purchased hardware you can purchase dedicated Software License Kits to upgrade:

- AP-1000 into one of the ORiNOCO Outdoor Routers described on the previous pages.
- Extend the features of a previously purchased ORiNOCO Outdoor Routers.

For more information about the software license upgrade program, please consult:

- Your authorized ORiNOCO Reseller or local Lucent Technologies Sales office for more information.
- The ORiNOCO website at: **http://www.lucent.com/orinoco**.

Preparing for Installation

2

Contents

Site Prerequisites **2-1**

Overview of the Indoor Installation **2-2**

Outdoor Router Hardware 2-2
- Outdoor Router 2-2
- Outdoor Router Client 2-4

Cable System 2-5
- Placement of the Surge Arrester 2-5
- Antenna Cable Route 2-6

Overview of the Outdoor Installation **2-8**

Antenna Placement 2-8
Antenna Mast/Wall Bracket 2-11
- Tripod Mount 2-11
- Wall (Side) Mount 2-11
- Antenna Mast Requirements 2-11

Grounding System 2-12
- Antenna Alignment 2-12
- Antenna Polarization 2-13

Antenna Cable Routing 2-14

Preparing for Installation

2

Site Prerequisites

Please review all requirements outlined within the sections listed below before starting the installation procedure:

- Overview of the Indoor Installation (page 2-2)
- Overview of the Outdoor Installation (page 2-8)
- Before Climbing the Roof... (page 2-15)

Prior to climbing on the roof or any other area where you intend to install the outdoor antenna, you are advised to:

- Verify you have arranged all safety measures for outdoor/rooftop installation (see the “Safety Precautions” on page 4-1).
- Verify you have all equipment and tools required to install the outdoor antennas.
- Install and verify proper operation of the equipment.

Overview of the Indoor Installation

The indoor installation of the link will consist of the following components:

- Outdoor Router Hardware, and
- A Cable System.

Outdoor Router Hardware

There are two types of hardware installations to setup a wireless connection:

- The Outdoor Router, and
- The Outdoor Router Client.

Outdoor Router

To setup a point-to-point wireless connection between two Outdoor Routers, you will need:

- Two ORiNOCO Outdoor Routers with PC Card, and
- Two antenna cable systems (see Appendix Appendix A “The Antenna Cabling System”), and
- Two outdoor antenna’s.

Figure 2-1 shows an overview of the hardware setup for this indoor installation.

Figure 2-1 Overview Indoor Installation of the Outdoor Router

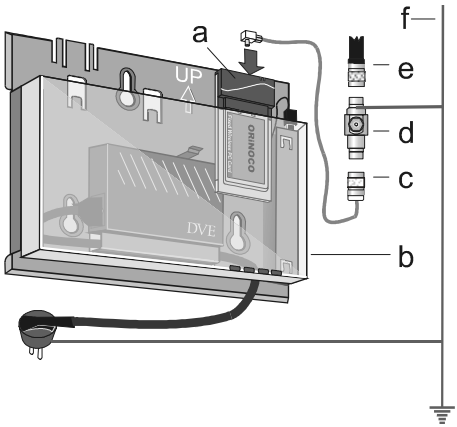

On each end of the wireless link you will need the following items as pictured in Figure 2-1 on page 2-2:

a. The ORiNOCO PC Card (see “Selecting the Right Card & Cables” on page G-3).
b. The Outdoor Router device that has been loaded with ORiNOCO Outdoor Router software.
c. The Cable Assembly to connect the PC Card to the Surge Arrester.
d. A surge arrester to protect your sensitive ORiNOCO equipment from static discharge and transients that may occur to your antenna.
e. A low-loss antenna cable to connect the indoor installation to the outdoor antenna.
f. A grounding system as described in “Grounding System” on page 2-12.

WARNING:
The ORiNOCO Outdoor Router, the ORiNOCO Surge Arrester and the antenna mast ***must be connected to the same grounding system****.*

Placement of the Outdoor Router Hardware

The hardware of your ORiNOCO Outdoor Router device is designed for indoor mounting and operation. The ideal location to install your Outdoor Router unit must satisfy the following requirements:

- The location provides a connection to a grounding type AC wall outlet (100-240 VAC), using the standard power cord as supplied with the unit.

  The ground of the AC wall outlet must be connected to the same grounding system as the ORiNOCO Surge Arrester and antenna mast (see “Grounding System” on page 2-12).
- The location must allow for easily disconnecting the Outdoor Router unit from the AC wall outlet.
- The location provides a connection to the network backbone that may either be:
  - The Ethernet LAN cable that connects it to a hub, bridge or directly into a patch panel or
  - The wireless connection via a second ORiNOCO PC Card that is inserted into the other PC Card slot of the Outdoor Router device.
- The location is as close as possible to the point where the antenna cable will enter the building (see also “Placement of the Surge Arrester” on page 2-5).

Outdoor Router Client

To setup a wireless connection with the Outdoor Router Client, you will need:

- One PC Card,
- One Outdoor Router Client License Kit, and
- One antenna cabling system.

Figure 2-2 shows an overview of the hardware setup for this indoor installation.

Figure 2-2 Overview Indoor Installation Outdoor Router Client

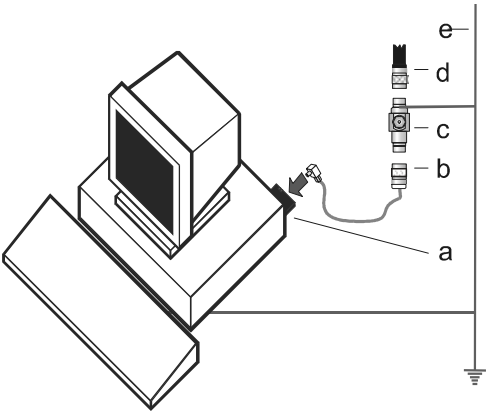

On each end of the wireless link you will need the following items as pictured in Figure 2-2:

a. The ORiNOCO PC Card (see “Selecting the Right Card & Cables” on page G-3).
b. The Cable Assembly to connect the ORiNOCO PC Card (A) to the Surge Arrester.
c. A surge arrester to protect your sensitive ORiNOCO equipment from static discharge and transients that may occur to your antenna.
d. A low-loss antenna cable to connect the indoor installation to the outdoor antenna.
e. A grounding systems as described in “Grounding System” on page 2-12.

WARNING:
The ORiNOCO Outdoor Router, the ORiNOCO Surge Arrester and the antenna mast ***must be connected to the same grounding system****.*

Cable System

CAUTION:
The Outdoor Router products are designed for indoor installation. At all times the location of the Outdoor Router unit must be indoors, to protect the unit from extreme weather conditions, excessive heat and humidity and to keep the unit free from vibration and dust.

Prior to mounting the Outdoor Router products you are advised to carefully calculate:

- The distance between the intended location of your Outdoor Router unit and the location of the antenna mast, and
- The height of the antenna on the mast.

If the low-loss antenna cable is not long enough to cover this distance you can select from the following two options:

- Select another cable length from the Lucent Technologies low-loss cable offering (see Appendix A “The Antenna Cabling System”), or
- Select another location that satisfies the requirements listed on the previous page to mount your Outdoor Router device.

As the length of the antenna cable may affect the actual range of your outdoor antenna installation, the second one is the preferred option.

WARNING:
You are not allowed to change the length of the Lucent Technologies low-loss antenna cable. Shortening the cable will void the Lucent Technologies Warranty, and may conflict with radio certifications and/or approvals.

How to install the Outdoor Router hardware is described in the Getting Started Guide that was shipped with the Outdoor Router device.

Placement of the Surge Arrester

The ORiNOCO Surge Arrester is an indispensable part of your outdoor antenna installation, to protect your sensitive electronic equipment from transients or electro-static discharges at the antenna.

For optimal protection the ORiNOCO Surge Arrester must be installed at a location that satisfies the following requirements:

- A location as close to the location where the antenna cable will enter the building (see also “Placement of the Outdoor Router Hardware” on page 2-3).
- The location allows for easily (dis-)connecting the surge arrester from/to the ORiNOCO PC Card in the ORiNOCO Outdoor Router using the Cables Assembly pictured in Figure 2-1 on page 2-2.
- The location provides a connection to the same grounding system as the Outdoor Router unit and the outdoor antenna mast as described in “Grounding System” on page 2-12.

Antenna Cable Route

The antenna cable must be connected to the Outdoor Router unit via the ORiNOCO Surge Arrester and Cable Assembly as pictured in Figure 2-1 on page 2-2. To plan the route of the antenna cable please consider the following:

- Does the cable route require drilling through a wall or ceiling?
- Do you have a building plan of the desired location showing any other existing cabling routes like electricity, telephone or networking?
- Does the type of building materials require special tools for drilling purposes?

The cable should not be installed into “tight” positions, as bending or applying excessive force to the connectors may damage the antenna cable. Always allow the cable to bend naturally around corners. The recommended bend radius is 100 mm (4 in.).

The antenna cable must be secured along its complete length. No part of the antenna cable should be allowed to hang free. This is particularly important for cable parts that are installed outdoors.

CAUTION:

The antenna cable and cable connectors are not designed to withstand excessive force:

a. Do not use the connectors as “cable grips” to pull cable through raceway or conduit.

b. Do not use the cable connector to support the weight of the cable during or after installation.

c. Do not use any appliances to tighten the connectors.

d. Always seal the connectors using weather-proofing tape.

Prior to sealing the outdoor connectors and permanently securing the cable to the wall using cable ties and wall hooks, you may wish to verify if the installation and all components function properly.

Overview of the Outdoor Installation

The outdoor installation of the link (point-to-point or point-to-multipoint) will consist of the following components:

- The Lucent Technologies Antenna
- The Lucent Technologies proprietary low-loss antenna cable (available in different cable lengths).
- Antenna Mast/Wall Bracket for the antenna.
- An adequate “Grounding System” that meets the requirements described in “Grounding System” on page 2-12.

NOTE:
All outdoor cable connectors must be sealed with the enclosed weather-proofing stretch tape to permanently waterproof the coax connectors.

DANGER:
For your own safety, the antenna mast and the grounding system should be installed only by experienced installation professionals who are familiar with local building and safety codes and/or the national electrical codes.
Carefully read the instructions as described for the “Grounding System” on page 2-12 and verify that your installation complies with the appropriate regulations and codes before installing the antenna.

Antenna Placement

To achieve maximum performance for your wireless outdoor connection, the ORiNOCO Outdoor Antenna must have clear line-of-sight. Line-of-sight can be defined as:

- No obstacles in the direct path between the two antennas.
- No obstacles within a defined zone around the antenna beam.

You need to be aware that the shape of a radio beam is not straight and narrow like a laser beam. The radio beam, also referred to as Fresnel Zone[1], is rather “bulged” in the middle, like for example a “rugby ball”. The exact shape and width of the Fresnel Zone is determined by the path length and frequency of the radio signal.

1 Pronounced as “Fray-Nell”

If any significant part of this zone is obstructed, a portion of the radio energy will be lost, resulting in reduced performance. Reduced performance may also occur when obstacles that are close to the antenna beam cause signal reflections or noise that interfere with the radio signal.

Figure 2-3 shows some typical examples of obstacles that you must avoid for the Directional Antenna to operate effectively:

a. Neighboring Buildings

b. Trees or other obstructions

c. Power lines

To allow optimal performance you will need to ensure that the type and placement of the antennas leaves sufficient clearance of the Fresnel Zone at the maximum width of the bulge, typically at the mid-point between the antennas. For more information turn to Chapter 3 “Determine Range & Clearance”.

Figure 2-3 Potential Obstacles for a Directional Antenna

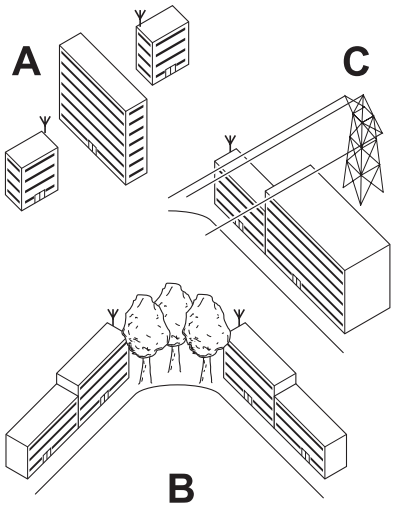

To minimize the influence of obstacles, signal interference or reflections please note the following guidelines:

- Mount the antenna as high as possible above the “ground” to allow maximum clearance:
  - In open areas “ground” is the actual surface of the earth
  - In dense urban areas “ground” is to be interpreted as the height of the highest obstacle in the signal path between the two antenna sites.
- Avoid trees in the signal path to avoid signal absorption due to dynamic changes in seasons (leaves/ice).
- Install the antenna at least 2 m (6 ft) away from all other antennas.

Other situations where reflections of the radio signal may cause interference are environments where large reflecting surfaces exist in parallel or partly perpendicular to the antenna beam.

Environments with large reflective surfaces include:

- Mirrored-glass buildings
- Crowded parking lots
- Water or moist earth and moist vegetation
- Above ground power/telephone lines

Weather conditions such as rain or snow usually will not have much impact on the performance of your ORiNOCO Outdoor System, provided that you sealed all cable connectors using the weather-proofing tape.

Seasonal factors that could have an effect on signal propagation may occur in the following situations:

- A marginal communications quality in late fall (with no leaves on trees in the signal path) might fail in the summer.
- In winter, an antenna link may fail when the antenna is exposed to ice buildup, or when the antenna elements are covered with snow.

NOTE:
Radio paths over water or extremely flat ground may require optimization of antenna height at one end of the path. This is due to reflections adding in-phase or out-of-phase. Adjustment of antenna height by 1 to 3 meters should move the signal from a null to a peak.

In these cases consult your supplier to take appropriate steps to maintain or optimize wireless performance.

Antenna Mast/Wall Bracket

Basically there are two ways to erect an antenna mast:

- “Tripod Mount”
- “Wall (Side) Mount”

Tripod Mount

The tripod mount is used primarily on peaked and flat roofs. The antenna mast must be secured to the roof using 3 or 4 guy wires that are equally spaced around the mast. When the height of the antenna mast is more than 3 meters (10 ft), you are advised to use at least three guy wires for each 3 meter (10 ft) section of the mast.

Wall (Side) Mount

A wall (side) mount allows for mounting an antenna (mast) on the side of a building or on the side of an elevator penthouse. This will provide a convenient mounting location when the roof overhang is not excessive and/or the location is high enough to provide a clear line of sight.

In most situations mounting an antenna directly to the wall will not allow you to properly align the antenna with the corresponding antenna at the opposite end of your wireless link. As poor alignment will typically result in poor performance, Lucent Technologies advises you to always mount the antennas to a mast.

Antenna Mast Requirements

To accommodate the ORiNOCO antennas, the antenna mast must satisfy the following requirements:

a. The construction of the mast must be of a sturdy, weatherproof and non-corrosive material like for example galvanized or stainless steel construction pipe.

b. Typical diameter of the mast should be between 35 mm (1.4 in.) and 41 mm (1.625 in.). Subject to the type of antenna that you intend to install other diameters may be possible as well.

c. The height of the antenna mast must be sufficient to allow the antenna to be installed at least 1.5 m (5 ft.) above the peak of roof. If the roof is metal, then the height of the antenna should be a minimum of 3 m (10 ft) above the roof (see also Chapter 3 “Determine Range & Clearance”).

d. The mast or wall-bracket must be free from any substance that may prevent a good electrical connection with the antenna; for example, paint.

Grounding System

Direct grounding of the antenna mast, ORiNOCO Outdoor Router bridge and ORiNOCO Surge Arrester is very important.

A safety grounding system is necessary to protect your ORiNOCO Outdoor installation from lightning strikes and the build-up of static electricity.

WARNING:
The antenna mast, ORiNOCO Outdoor Router and ORiNOCO Surge Arrester must be connected to the same ground, using an equipotential bonding conductor.
A good electrical connection should be made to one or more ground rods, using at least a 10AWG ground wire and non-corrosive hardware. The grounding system must comply with the National Electrical Code and safety standards that apply in your country. Always check with a qualified electrician if you are in doubt as to whether your ORiNOCO Outdoor installation is properly grounded.

Antenna Alignment

For optimal performance of your wireless link, make sure that the antennas are properly aligned (facing one another “eye-to-eye”). To align the antennas:

- Use a pair of binoculars and/or a map of the area and compass to point the antennas to one another.
- Use the Wireless Link Test option of the OR Manager as described in the "ORiNOCO OR Manager - User’s Guide" to analyze the radio link quality.

  The Wireless Link Test option will enable you to display the strength of the ORiNOCO radio signal related to the noise that may be appear in the signal path.

  Looking at the Wireless Link Test screen, you can interactively optimize antenna alignment if required, by making small modifications in the antenna orientation.
- Alternatively, consult a professional Antenna Installation Service to optimize the antenna alignment.

Omni-directional antennas are characterized by a wide radiation pattern. Therefore alignment of this type of antennas is less critical than for directional antennas.

Figure 2-4 OR Manager Wireless Link Test

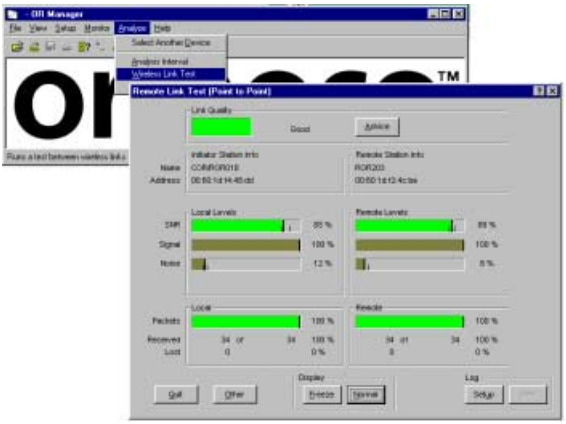

Antenna Polarization

The standard mounting method for Lucent Technologies outdoor antennas is designed for vertical polarization.

In some cases you might consider mounting the antenna for horizontal polarization. For example to minimize the influence of cross-talk between antennas when:

- You plan to mount multiple directional antennas to the same mast.
- Your wireless link “crosses” another radio beam from a neighboring installation.

Mounting for horizontal polarization is only supported by the Lucent Technologies 14 dBi Directional Antenna and 24 dBi Directional Parabolic Grid Antenna.

NOTE:
For optimal wireless performance you must always verify that the polarization on both ends of the wireless link is the same for both antennas.

Consult the corresponding appendices for instructions on alternating the antenna polarization.

Antenna Cable Routing

The antenna cable must be routed and fixed in such a way to clear the passage area for installation technicians.

All connectors that are located outdoors, must have a weatherproof seal. You are advised to seal connectors *only after* you have completed final radio tests.

Before Climbing the Roof...

Before you start installation check whether you have all hardware components required to setup an outdoor antenna link. For each side of a wireless outdoor antenna link you will need:

1. One Outdoor Router or Outdoor Router Client.
2. One ORiNOCO PC Card.
3. One ORiNOCO Cable Assembly (to connect item 2 to item 4).
4. One ORiNOCO Surge Arrester.
5. One Lucent Technologies low-loss antenna cable.
6. One ORiNOCO Outdoor Antenna
7. Weather-proofing electrical tape.

If any of the items is missing, or if there are signs of shipment damage, please inform your supplier.

Determine Range & Clearance

3

Contents

Introduction **3-1**

Determine the Outdoor Range **3-2**

Determine the Maximum Range 3-3
- Type of Outdoor Antenna Equipment 3-3
- Data Speed of the Wireless Link 3-7

Determine the Cable Factor 3-7
Determine the Clearance Factor 3-8

Examples **3-13**

Point-to-Point Links 3-13
- Calculate the Clearance effect on Range 3-13
- Calculate the Cable effect on Range 3-14

Point-to-MultiPoint Links 3-15

Determine Range & Clearance

3

Introduction

When you read about wireless outdoor products, you will often encounter the terms “output power” of the radio and “gain” of the antenna equipment as measures for the “strength” of the transmitted signal.

- Output Power of radio equipment is often subject to maximum limits as defined by local radio regulations (see Appendix G “Certified Outdoor Solutions”). Consequently Output Power is not by definition the way to enhance wireless performance.
- High gain antennas are larger in size than low gain antennas, and are characterized by a narrow “focus” of the radio beam. These two characteristics make it more difficult to aim the antennas, and/or adjust antenna alignment to optimize the performance of the wireless point-to-point link.

The Lucent Technologies outdoor solution is based upon the following principles:

- An output power and antenna gain that comply with the maximum limits as defined by local governing bodies concerning radio transmissions.
- Enhanced radio sensitivity for optimal receive quality of ORiNOCO radio signals transmitted by remote antennas.

Determine the Outdoor Range

The range of your outdoor antenna installation is closely related to a number of different factors. To allow you to determine the range of the ORiNOCO Outdoor Router antenna system in your situation, we have defined the formula listed below:

Range = Maximum Range x Cable Factor x Clearance Factor

- **Maximum Range** identifies the theoretical maximum that could be achieved under optimal circumstances using the available ORiNOCO Outdoor products according to their specs and in compliance with local radio regulations.

  This value can be read from Table 3-1 or Table 3-2, according to the country where the antenna system will be installed.
- **Cable Factor** identifies a corrective percentage value that compensates additional cable loss related to the type of cables applied at both ends of the wireless link. The Cable Factor value can be read from Table 3-3 on page 3-7.
- **Clearance Factor** identifies a corrective percentage value that should be applied in case the signal path of your wireless link does not provide the minimum clearance listed in the Maximum Range table. The Clearance Factor can be read from Figure 3-2 on page 3-11.

An example on how to use this formula is described in the “Examples” on page 3-13.

CAUTION:
This formula should only be used as a rule of thumb to asses the possible range that could be achieved in your situation, and/or to select the type and height of the antenna installations. Always perform on-site measurements to validate the results from the range calculation. To perform such measurements you can use the OR Manager Wireless Link test option as described in the "ORiNOCO OR Manager - User’s Guide".

Determine the Maximum Range

The maximum range of your ORiNOCO Outdoor Router antenna system is based on the:

- Type of Outdoor Antenna Equipment (page 3-3)
- Data Speed of the Wireless Link (page 3-7)
- Clearance of the Signal Path (see “Determine the Clearance Factor” on page 3-8).

NOTE:
The values listed in this section are based upon calculations that assume “optimal radio conditions”.
They do not represent a guarantee that the same maximum distance can be achieved at your location. Different performance figures may result from:

- Incorrect alignment of antennas (see “Antenna Alignment” on page 2-12).
- Polarization mismatch of the antennas.
- Sources of interference or unexpected reflections in the signal path that affect the communications quality (see “Antenna Placement” on page 2-8).
- Severe weather conditions such as heavy rain or snow fall, or strong winds.
- Seasonal influences such as leaves on trees, or icing on the antennas.

Type of Outdoor Antenna Equipment

As described in the previous chapters, Lucent Technologies offers different types of outdoor antennas, and cable lengths to design your ORiNOCO Outdoor Router outdoor antenna installation.

- The directional antennas provide maximum range, but due to their narrow signal beam width, these antennas require precise antenna alignment to achieve optimal performance. The higher the antenna gain the more precise the alignment should be.

  Directional antennas are typically used to connect:

  — Two Remote Outdoor Routers in a Point-to-Point link.

  — One Remote Outdoor Router (satellite) to one Central Outdoor Router (base) in a Point-to-Multipoint link.

- The omni-directional antennas, have by nature an omni directional azimuth pattern which makes these antennas easy to install. There is also a gain beam width relation for omni-antennas: the higher the gain of the omni-antenna the narrower the vertical beam width. In a hilly terrain a 7dBi omni antenna can/will be a better solution then the 10 dBi omni-antenna.
- The 12 dBi wide-angle antenna is a good solution for the Central Outdoor Router (base) antenna in hilly terrain. It combines a wide opening angle with relative high gain. The mounting brackets allow tilting of the antenna.

  For beamwidth and gain characteristics of the various antennas, please consult the appendices of this document that describe each antenna in more detail.

The length of the antenna cable also has an impact on the maximum range that can be achieved with the antenna combination (see “Determine the Cable Factor” on page 3-7).

Subject to local radio regulations that in a number of countries limit the maximum output power, Lucent Technologies offers different outdoor antenna products in the various countries over the world. Therefore you will need to consult the table that matches the radio regulations as apply in your country:

- Table 3-1 on page 3-5, for the USA and Canada and any other country that adheres to the radio regulations as defined by the US Federal Communications Commission (FCC).
- Table 3-2 on page 3-6, for all European countries, Japan, and any other country that adheres to the radio regulations as defined by the European Telecommunications Standards Institute (ETSI) and MPT.

Table 3-1 Maximum Outdoor Range for FCC Products

Antennas		24 dBi Directional Parabolic Grid Antenna[1]		14 dBi Directional Antenna		12 dBi Directional Wide Angle Antenna		10 dBi Omni-Directional Base Station Antenna		7 dBi Omni-Directional Base Station Antenna	
	Speed	**Range**	**Clearance**	**Range**	**Clearance**	**Range**	**Clearance**	**Range**	**Clearance**	**Range**	**Clearance**
24 dBi Directional Parabolic Grid Antenna	1 Mb/s	240 km 149mi	1200 m 4000 ft.	74 km 46mi	150 m 490 ft.	60 km 37mi	101 m 331 ft.	48 km 30mi	70 m 230 ft.	34 km 21mile	45 m 148 ft.
	2 Mb/s	170 km 105mi	610 m 2000 ft.	54 km 33mi	85 m 280 ft.	42 km 26mi	61 m 200 ft.	34 km 21mi	45 m 148 ft.	24 km 15mile	30 m 98 ft.
	5.5 Mb/s	120 km 74mi	320 m 1050 ft.	38 km 23mi	50 m 164 ft.	30 km 18mi	39 m 128 ft.	24 km 15mi	30 m 98 ft.	17 km 10mile	20 m 66 ft.
	11 Mb/s	85 km 52mi	180 m 590 ft.	27 km 16mi	35 m 115 ft.	21 km 13mi	27 m 89 ft.	17 km 10mi	21 m 69 ft.	12 km 7.5mile	16 m 52 ft.
14 dBi Directional Antenna	1 Mb/s	74 km 46mi	150 m 490 ft.	24 km 15mi	30 m 98 ft.	19 km 12mi	24 m 79 ft.	15 km 9.3mi	20 m 66 ft.	11 km 6.8mile	15 m 49 ft.
	2 Mb/s	54 km 33mi	85 m 280 ft.	17 km 10mi	21 m 69 ft.	13 km 8.0mi	18 m 59 ft.	11 km 6.8mi	15 m 49 ft.	7.5 km 4.7mile	12 m 39 ft.
	5.5 Mb/s	38 km 23mi	50 m 164 ft.	12 km 7.5mi	16 m 52 ft.	9.5 km 5.9mi	14 m 46 ft.	7.6 km 4.7mi	12 m 39 ft.	5.5 km 3.4mile	10 m 33 ft.
	11 Mb/s	27 km 16mi	35 m 115 ft.	8.5 km 5.3mi	13 m 43 ft.	6.7 km 4.2mi	11 m 36 ft.	5.5 km 3.4mi	10 m 33 ft.	4.0 km 2.5mile	8 m 26 ft.

1 The maximum ranges for the 24 dBi Grid antennas are calculated values. Maximum Ranges were only tested up to 110 km.

All values in Table 3-1 are based on the use of the Standard black-colored ORiNOCO PC Card, and 6m (20 ft.) cables with a diameter of 10 mm. (0.4 in.) on both ends of the antenna link.

Table 3-2 Maximum Range for ETSI/FR/JP Products

Antennas		14 dBi Directional Antenna[1]		12 dBi Directional Wide Angle Antenna[2]		10 dBi Omni-Directional Base Station Antenna[2]		7 dBi Omni-Directional Base Station Antenna[2]	
	Data Speed	**Range**	**Clearance**	**Range**	**Clearance**	**Range**	**Clearance**	**Range**	**Clearance**
14 dBi Directional Antenna[1]	1 Mb/s	7 km 4.3mi	11 m 36 ft.	6.9 km 4.3mi	11 m 36 ft.	5.5 km 3.4mi	9.5 m 31 ft.	4.0 km 2.5mi	8 m 26 ft.
	2 Mb/s	5 km 3.1mi	9 m 30 ft.	4.9 km 3.0mi	9 m 30 ft.	4.0 km 2.5mi	8 m 26 ft.	2.7km 1.7mi	6.6 m 22 ft.
	5.5 Mb/s	3.5 km 2.2mi	7.5 m 25 ft.	3.5 km 2.2mi	7.5 m 25 ft.	2.7 km 1.7mi	6 m 20 ft.	1.9 km 1.2mi	5.5 m 18 ft.
	11 Mb/s	2.5 km 1.6mi	6 m 20 ft.	2.5 km 1.6mi	6.5 m 22 ft.	2.0 km 1.2mi	5.5 m 18 ft.	1.4 km 0.9 mi	5.6 m 18 ft.

1 In combination with Red-colored Fixed Wireless PC Card and a 6 m (20 ft.) cable with diameter of 5 mm (0.2 in.)

2 In combination with Red-colored Fixed Wireless PC Card and a 6 m (20 ft.) cable with diameter of 10 mm (0.4 in.)

NOTE:

All values listed in Table 3-2 are based on the correct use of the Red-colored Fixed Wireless PC Card and cables as indicated in the corresponding footnote(s). Using different cards might violate ETSI radio regulations (see also “Selecting the Right Card & Cables” on page G-3)

Data Speed of the Wireless Link

By default, the radio of ORiNOCO Outdoor Router products will transmit at the highest available transmit rate.

As data transmissions at lower speeds can travel larger distances than transmissions at the highest transmit rates, the ORiNOCO Outdoor Routers allow you to choose a lower data rate to increase the maximum range. For information about customizing the transmit rate of your Outdoor Router, please consult the "ORiNOCO OR Manager - User's Guide".

To help you to determine the appropriate tuning settings, we have listed the range values that apply to the various transmit rates in Table 3-1 and Table 3-2.

Determine the Cable Factor

The range value calculations listed in Table 3-1 and Table 3-2 were based on antenna installations where both antennas were connected to a 6m/20 ft. cable.

- If this is the case in your situation, the Cable Factor for your installation is 100%.
- If you are using different cables, you will need to determine the Cable Factor from Table 3-3 below, to calculate the probable range for your ORiNOCO Outdoor Router installation.

Table 3-3 Calculate the Cable Factor

This Location	Remote Location	Cable Factor
6m. (20 ft.)/10 mm (0.4 in.)	6m. (20 ft.)/10 mm (0.4 in.)	100%
	6m. (20 ft.)/5 mm (0.2 in.)	81%
	15m. (50 ft.)	81%
	22m. (75 ft.)	67%
6m. (20 ft.)/5 mm (0.2 in.)	6m. (20 ft.)/5 mm (0.2 in.)	66%
	15m. (50 ft.)	66%
	22m. (75 ft.)	54%
15m. (50 ft.)	15m. (50 ft.)	66%
	22m. (75 ft.)	54%
22m. (75 ft.)	22m. (75 ft.)	45%

NOTE:
When using Table 3-3 in countries that adhere to the ETSI regulations, please note that the maximum ranges as listed in Table 3-2 do not always use cable factor 100%.

This is due to local radio regulations and legislation that do not allow the use of the 6 m. (20 ft.)/10 mm (0.4 in.) cables in ETSI countries, France or Japan. See the example on Point-to-MultiPoint Links (page 3-15) for more details.

CAUTION:
The 6m (20 ft.) cables with a diameter of 5mm (0.2 in.) can be used with all antenna types. The Cable Loss of these cables equals the value of the 15m.(50ft.) cables. Use of the 6m (20 ft.) cables with a diameter of 10mm (0.4 in.) is subject to local radio regulations. Consult Appendix G "Introduction" for information whether you are allowed to use the 6m/ 10mm cable in your country in combination with the antenna of your choice.

Determine the Clearance Factor

For optimal performance of your outdoor antenna link, it is important that the signal path between the two ORiNOCO Outdoor Routers provides sufficient clearance.

NOTE:
A wireless outdoor antenna link that lacks sufficient clearance will suffer from poor performance, which is typically perceived as slow network response times.

Although your ORiNOCO Outdoor Router equipment will automatically retransmit every data frame that got lost due to an out-of-range situation or frame collision, the larger the number of retransmissions attempts, the lower the throughput efficiency of your wireless link.

This section will explain how to determine the clearance that applies in your environment, and (if applicable) the effect of insufficient clearance on the range of your outdoor antenna link.

In Chapter 2 "Preparing for Installation" we described the shape of the radio beam being "bulged" in the middle, as pictured in Figure 3-1 on page 3-9.

Figure 3-1 Fresnel Zone

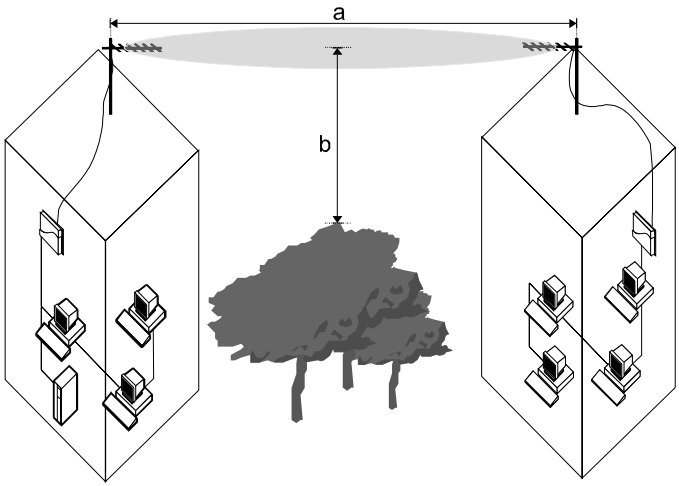

If any significant part of this bulged zone is obstructed, a portion of the radio energy will be lost, which may affect the performance of your wireless link in terms of maximum range and/or transmit rate.

Looking at Figure 3-1 you will see two variables that determine the shape of the radio beam, also referred to as Fresnel Zone:

a. The distance between the antennas

b. The clearance required for optimal performance, where clearance should be interpreted as:

- Vertical clearance above the ground and the highest buildings or objects in the signal path, and
- Horizontal clearance from neighboring buildings and objects in the signal path.

For optimal range and throughput performance, you must ensure that your antenna installation provides maximum clearance in both horizontal and vertical direction.

The minimum clearance for the various antenna combinations and distances is listed in the grey-shaded columns of Table 3-1 and Table 3-2, where clearance should be interpreted as follows:

- In ***open areas*** without obstacles in the signal path, clearance is measured as height above the surface of the earth.
  For example, if the antenna is mounted on the roof, this height includes the height of the building plus the height of the mast above the rooftop.
- In ***areas with obstacles*** in the signal path between the two antenna(s), clearance should be measured as height above the highest obstacle(s) in the signal path.
- In ***dense urban areas***, the clearance should be measured as height above the highest rooftop or any other obstacle(s) in the signal path between the two antenna(s).

Looking at the minimum clearance requirements as identified in Table 3-1 and Table 3-2, you may realize that local authorities, the proprietor of the premises, or other reasons may not allow you to set up an antenna mast that will enable you to meet the listed clearance requirement.

In such situations, you may not be able to achieve a full line-of-sight clearance. At the same time however, you may not even need full clearance, since the distance that your wireless outdoor installation needs to cover is less than the listed maximum range.

To determine the effect of insufficient signal path clearance, you will need to determine the Clearance Factor as described below, and calculate its effect on the range for your antenna installation using the formula described in “Determine the Outdoor Range” on page 3-2.

- If the clearance for your antenna installation is equal to, or better than the minimum clearance requirement identified in Table 3-1 and Table 3-2, the Clearance Factor for your installation is 100%.
- If your actual clearance is less than the minimum clearance identified in Table 3-1 or Table 3-2, you will need use the diagram pictured in Figure 3-2 to determine the actual range that will apply in your situation.

Figure 3-2 Clearance Factor Diagram

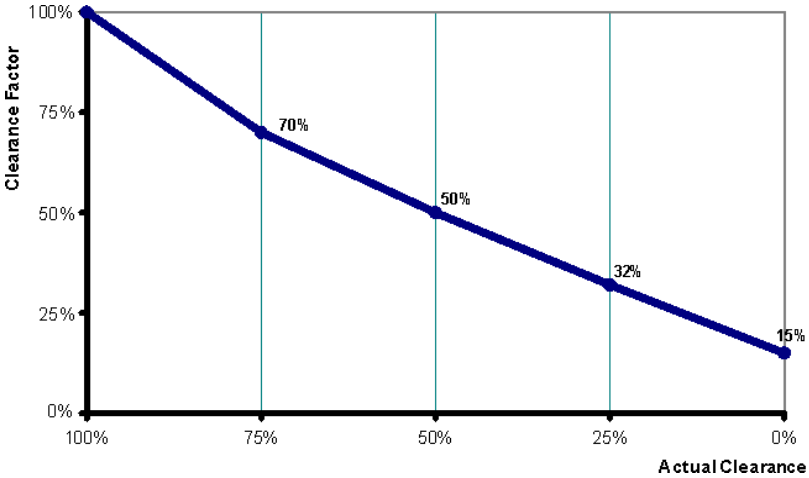

NOTE:

The Clearance Factor Diagram should be used as a rule-of-thumb for estimating the probable range in case the clearance requirements are not fully met.

In real life using FCC approved products, you will also find it almost impossible to achieve the level of clearance for maximum range.

For your convenience we have also included Table 3-4 to provide an example in conditions where the more typical clearance is 10 meters (33 ft.)

Table 3-4 FCC Outdoor Range with 10 m (33 ft.) Clearance

Antennas		24 dBi Directional Parabolic Grid Antenna		14 dBi Directional Antenna		12 dBi Directional Wide Angle Antenna		10 dBi Omni-Directional Base Station Antenna		7 dBi Omni-Directional Base Station Antenna	
	Data Speed	**Range**	**Clearance**	**Range**	**Clearance**	**Range**	**Clearance**	**Range**	**Clearance**	**Range**	**Clearance**
24 dBi Directional Parabolic Grid Antenna	1 Mb/s	26.2 km 16.3 mi	10 m 33 ft.	19.0 km 11.8mi	10 m 33 ft.	17.3 km 10.7mi	10 m 33 ft.	15.8 km 9.8mi	10 m 33 ft.	14.1 km 8.8mi	10 m 33 ft.
	2 Mb/s	24.5 km 15.2mi	10 m 33 ft.	16.9 km 10.5mi	10 m 33 ft.	15.4 km 9.6mi	10 m 33 ft.	14.1 km 8.8mi	10 m 33 ft.	12.0 km 7.5mi	10 m 33 ft.
	5.5 Mb/s	21.8 km 13.5mi	10 m 33 ft.	14.4 km 8.9mi	10 m 33 ft.	13.1 km 8.1mi	10 m 33 ft.	12.0 km 7.5mi	10 m 33 ft.	10.2 km 6.3mi	10 m 33 ft.
	11 Mb/s	19.4 km 12.0mi	10 m 33 ft.	12.8 km 8.0mi	10 m 33 ft.	11.2 km 7.0mi	10 m 33 ft.	10.2 km 6.3mi	10 m 33 ft.	8.7 km 5.4mi	10 m 33 ft.
14 dBi Directional Antenna	1 Mb/s	19.0 km 11.8mi	10 m 33 ft.	12.0 km 7.5mi	10 m 33 ft.	10.9 km 6.8mi	10 m 33 ft.	9.5 km 5.9mi	10 m 33 ft.	8.1 km 5.0mi	10 m 33 ft.
	2 Mb/s	16.9 km 10.5mi	10 m 33 ft.	10.2 km 6.3mi	10 m 33 ft.	9.3 km 5.8mi	10 m 33 ft.	8.1 km 5.0mi	10 m 33 ft.	6.6 km 4.1mi	10 m 33 ft.
	5.5 Mb/s	14.4 km 8.9mi	10 m 33 ft.	8.7 km 5.4mi	10 m 33 ft.	7.6 km 4.7mi	10 m 33 ft.	6.6 km 4.1mi	10 m 33 ft.	5.5 km 3.4 mi	10 m 33 ft.
	11 Mb/s	12.8 km 8.0mi	10 m 33 ft.	7.1 km 4.4mi	10 m 33 ft.	6.1km 3.8mi	10 m 33 ft.	5.5 km 3.4 mi	10 m 33 ft.	4.0 km 2.5 mi	10 m 33 ft.

Examples

Point-to-Point Links

Suppose you are installing a wireless point-to-point link between two Remote Outdoor Routers as pictured in Figure 3-3 below, where:

- Both sites have been equipped with a 24 dBi Directional Parabolic Grid Antenna, connected via 6m.(20 ft.)/10 mm antenna cables.
- The distance between site **a** and **b** is 25 km. (15.3 mi.).
- The site is located in the US, which allows the use of FCC approved equipment.

Figure 3-3 Calculating the Point-to-Point Range

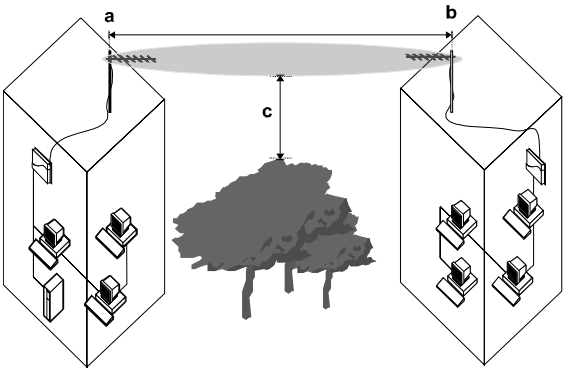

Looking at Table 3-1 on page 3-5, we learn that a High Speed link between two 24 dBi Directional Grid Antennas may cover a maximum distance of 85 Km.(52 mi.), provided that the signal path clearance is 180 m. (590 ft.) or better.

Now let's calculate the probable range for this example using the introduced formula:

Range = Maximum Range x Cable Factor x Clearance Factor

Calculate the Clearance effect on Range

In the example pictured in Figure 3-3 on page 3-13, we see a set of trees in the signal path. Let's suppose the clearance (**c**) between these trees and the signal path is only be 45 m (148 ft.).

1. Using a calculator we can easily determine that this 45 m (148 ft.) is about 25% of the required 180 m. (590 ft.) clearance for maximum range.
2. Looking at the “Clearance Factor Diagram” pictured in Figure 3-2 on page 3-11 we can see that 25% actual clearance, equals a Clearance Factor of 32%.
3. If we apply this Clearance Factor to the range calculation formula, your probable range would become:

   Range= 85 Km (52 mi.) x 32% x 100% = 27.2 Km (16.6 mi.)

This might satisfy your requirements for High Speed data transmissions between the two ORiNOCO Office Routers. However the “safety margin” looks pretty tight.

If we would base the calculation on transmissions at Medium speed, your range calculation would look as follows:

1. Looking at Table 3-1 on page 3-5, we learn that a Medium Speed link between two 24 dBi Directional Parabolic Grid Antennas may cover a maximum distance of 120 Km.(74 mi.), provided that the signal path clearance is 320 m. (1050 ft.).
2. As mentioned above however, our actual clearance is only 45 m (148 ft.); 14% of the required 320 m. (1050 ft.).

   Range= 120 Km (74 mi.) x 25% x 100% = 30 Km (18.6 mi.)

This result indicates that you can safely set the transmit rate of your ORiNOCO Outdoor Router to Medium Speed for reliable wireless communications.

Optionally you may wish to run the Wireless Link Test option of your OR Manager program to determine whether the High Speed option might provide reliable wireless connections as well.

Calculate the Cable effect on Range

We presumed that at both sites the antenna were connected via 6m.(20 ft.) cables with a diameter of 10 mm (0.4 in.).

If we would replace this cable at building **b**, with a longer 22 m. (75 ft.) cable, we would need to look at the Cable Factor effect of this longer cable.

1. Table 3-3 on page 3-7 tells us that this new cabling combination would result in a Cable Factor of 67%.
2. If we apply this Cable Factor to the range calculation formula again, your probable range would become:

   Range= 120 Km.(74 mi.) x 25% x 67% = 20.1 Km (12.5 mi.)

This result indicates that the effect of this cable will most likely prevent your wireless link from operating at both High and Medium Speed. In such situations you are advised to:

- Relocate the Outdoor Router hardware to a location that allows you to use a shorter cable length.
- Increase the height of the antenna on the mast and/or install taller antenna masts to increase the signal path clearance.
- Trade-off data speed versus range, and recalculate the ranges that could be achieved at lower Transmit Rates.

Alternatively, you may decide to perform on-site diagnostic measurements to validate the results of this calculation. Please consult the "ORiNOCO OR Manager - User's Guide" for information about using the Wireless Link Test feature to perform on-site diagnostic measurements.
The "ORiNOCO OR Manager - User's Guide" is available in electronic format on the ORiNOCO Outdoor Router CD-ROM.

Point-to-MultiPoint Links

Suppose you are installing a wireless Point-to-Multipoint link between one ORiNOCO Central Outdoor Router and two Remote Outdoor Routers as pictured in Figure 3-4 below, where:

- The Central Outdoor Router in building **c** is connected to a 7 dBi Omni-Directional Base Station Antenna, and
- The two remote sites **a** and **b** have been equipped with a 14 dBi Directional Antenna.
- All sites have been connected via 15m.(50 ft.) antenna cables.
- The site is located in the Europe, which requires you to use ETSI approved equipment[1].

1 In France you may only use equipment based on the FR channel-set.

Figure 3-4 Calculating the Point-to-Multipoint Range

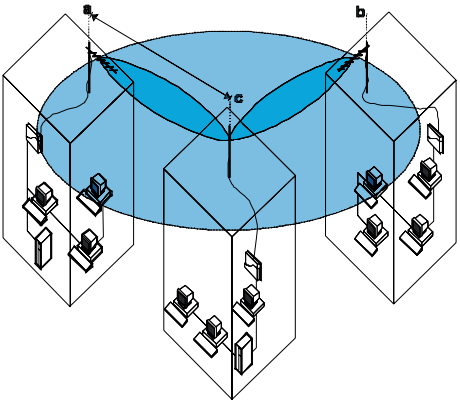

For this type of outdoor antenna installation you will need to determine the range for each link individually, i.e. the range from the building **c** to building **a**, and from the building **c** to building **b**.

NOTE:
In this example we will only demonstrate the calculation for the link between building **a** and **c**. However as different clearance factors may apply for each of these links, you are advised to calculate the actual range for each link individually when designing a “real” outdoor antenna link.

For the purpose of this example we presume that:

- The antenna installation will be installed in a dense urban area, where the distance between building **a** and building **c** is 0.5 Km.(0.3 mi.).
- The actual clearance is 3m. (9.9ft.), being the height of the antennas on the mast[2].

Now let’s calculate the probable range for this example using the introduced formula:

Range = Maximum Range x Cable Factor x Clearance Factor

2 According to the information about dense urban areas described in “Determine the Clearance Factor” on page 3-8, we use the height of the antennas above the roof-tops of both buildings to determine the level of actual clearance.

1. Looking at Table 3-2 on page 3-6, we learn that a High Speed link between a 7 dBi Omni-Directional Base Station Antenna and a 14 dBi Directional Antenna may cover a maximum distance of 1.4 Km. (0.9 mi.), provided that the signal path clearance is 5.6m. (18 ft.) or better.
2. Using a calculator we can easily determine that the actual clearance of 3m. (9.9ft.) is about 75% of the required 5.6m. (18 ft.) which equals a Clearance Factor of 70% (see Figure 3-2 on page 3-11).
3. The maximum range calculation in Table 3-2 on page 3-6 was based on the use of:
   - a 6m. (20 ft.) cables with a diameter of 5mm (0.2 in.). for the site with the 14 dBi Directional Antenna, and
   - a 6m. (20 ft.) cables with a diameter of 10mm. (0.4 in.) for the 7 dBi Omni-Directional Base Station Antenna.

     In other words, the Cable Factor for the maximum range calculation, already represents a value of 81% (see Table 3-3 on page 3-7).

   However since the site as pictured in Figure 3-4 on page 3-16 site is actually using two 15m (50 ft.) cables, Table 3-3 identifies the Cable Factor as being 66%.

   You actual Cable Factor will be 66% Cable Factor divided by the maximum range cable factor: $({}^{66\%}/_{81\%})$= 81%.
4. If we import all this information into the range calculation formula, your probable range for High Speed transmissions would become:

   Range= 1.4 Km. (0.9 mi.) x 70% x $({}^{66\%}/_{81\%})$ = 0.8 Km (0.5 mi.)

For campus type environments, this range will probably be sufficient to connect multiple buildings. However if you would need to cover a larger distance, you can either:

- Relocate the Outdoor Router hardware to a location that allows you to use a shorter cable length.
- Increase the height of the antenna on the mast and/or install taller antenna masts to increase the signal path clearance.
- Trade-off data speed versus range, and recalculate the ranges that could be achieved at lower Transmit Rates.

  Alternatively, you may decide to perform on-site diagnostic measurements to validate the results of this calculation. Please consult the "ORiNOCO OR Manager - User’s Guide" for information about using the Wireless Link Test feature to perform on-site diagnostic measurements.

  This guide is available in electronic format on the ORiNOCO Outdoor Router CD-ROM, or can be downloaded from the ORiNOCO website at: **http://www.lucent.com/orinoco**.

Installing the Antenna

4

Contents

Planning Antenna Installation **4-1**

Safety Precautions 4-1
Installation Overview 4-3

Mounting the Antenna **4-5**

Connecting the Antenna Cable **4-6**

Sealing the Cable Connectors 4-7

Installing the Antenna

4

Planning Antenna Installation

Carefully plan the day for your outdoor antenna installation. Do not install the antenna in wet or windy conditions, during a thunderstorm or when the area where the equipment will be installed is covered with ice or snow.

The grounding system for the antenna mast, Outdoor Router hardware and ORiNOCO Surge Arrester should be installed before the cable from the antenna is connected to the lightning arrestor. This will protect your ORiNOCO Outdoor System in case lightning should strike the antenna during installation.

Familiarize yourself with the antenna and the antenna specific mounting instructions prior to climbing any roof or ladder. Installing and testing all equipment before beginning the actual rooftop installation will help you to determine whether all required equipment and items are available and are functioning properly.

To verify the equipment prior to installation, you may need to skip this chapter and first proceed with the guidelines as described in the "ORiNOCO OR Manager - User's Guide".

The "ORiNOCO OR Manager - User's Guide" is shipped with the Outdoor Router device, and can be downloaded from the ORiNOCO website at: **http://www.lucent.com/orinoco**.

Safety Precautions

Please read this section carefully before beginning the installation. All requirements listed below should be satisfied prior to starting installation of your ORiNOCO outdoor antennas.

DANGER:

The ORiNOCO Outdoor Router outdoor antennas are intended for mounting on a roof, or the side of a building. Installation shall not be attempted by someone who is not trained or experienced in this type of work.The antenna has to be installed by a suitably trained professional installation technician or a qualified antenna installation service. The site pre-requisites have to be checked by a person familiar with the national electrical code, and other regulations governing this type of installation.

Outdoor antennas and antenna cables are electrical conductors. Transients or electrostatic discharges that may occur at the antenna (for example a lightning strike during thunderstorms) may damage your electronic equipment and cause personal injury or death to persons touching the exposed metal connectors of the antenna cable.

When installing, disconnecting or replacing one of the cabling components, you must ensure at all times that each exposed metal connectors of the antenna cabling system will be grounded locally during the work.

Do not install this antenna where there is any possibility of contact with high-voltage arc-over from power cables or service drops to buildings. The antenna, supporting mast and/or tower must not be close to any power lines during installation, removal or in the event of part of the system should accidentally fail. Apply a “Danger” label to a plainly visible area of the antenna support structure.

1. *Do not climb rooftops in wet or windy conditions, during a thunderstorm or when the area where the equipment will be installed is covered with ice or snow.*
2. *Do not touch antennas, surge arresters and/or antenna cables during a thunderstorm.*
3. *The location where you will install the antenna(s) must be at a safe distance from power lines or telephone lines. The safe distance should be at least twice the height of the antenna mast **plus** the height of the antenna.*
4. *Antennas shall be mounted in such a manner to minimize the potential for human contact during normal operation. In order to avoid the possibility of exceeding the FCC radio frequency exposure limits, human proximity to the antenna shall not be less than 20cm (8 inches) during normal operation.*

5. *The low-loss antenna cable that will connect the antenna with the lightning arrestor must be at least 1m (3 ft.) away from any high voltage or high current cable.*
6. *Check whether the antenna mast and its guy wires or wall bracket are positioned correctly and secured properly to the roof or wall(s).*
7. *Check whether the grounding system for the antenna mast, the Outdoor Router hardware and ORiNOCO Surge Arrester have been installed. The grounding system must comply with the requirements as described in "Grounding System" on page 2-12.*

   Always consult a qualified electrician if you are in doubt as to whether the antenna mast, the ORiNOCO Surge Arrester and Outdoor Router hardware are properly grounded.
8. *The antenna cable between the antenna and the lightning arrestor must be grounded at all times. If the cable is disconnected at one end for some reason (for example, to replace the lightning arrestor) then you must ensure that the exposed metal connector of the cable is grounded locally during the work.*

Installation Overview

The installation process can be summarized in the following 10 steps.

1. Verify that the support structure for the antenna has been connected to the grounding system. If this is not the case you should do so now.
2. Connect the exposed metal connectors of the low-loss antenna cable to the grounding system.
3. Mount the antenna to the support structure, following the guidelines as described for your antenna in Appendices B through F.
4. Connect the antenna cable to the antenna
5. Route the antenna cable to the ORiNOCO Surge Arrester that has been installed indoors.
6. Connect the antenna cable to the Surge Arrester.
7. Connect the Cable Assembly to the Surge Arrester.
8. Connect the opposite end of the Cable Assembly to the connector in the extended part of the ORiNOCO card that protrudes from the host device.

9. Run the Wireless Link Test diagnostics of the OR Manager program to aim the antenna and verify optimal placement.
10. Once the antenna is correctly positioned, and you have verified the installation works properly, secure all cables and use weather-proofing tape to seal all outdoor connectors.

WARNING:
When you need to remove or relocate the antenna, follow the "Safety Precautions" on page 4-1, and follow the steps listed above in exactly the reverse order.

Mounting the Antenna

Lucent Technologies offers multiple antennas to setup a wireless link.

As the mounting procedures for the various antennas may differ from one another, please consult the corresponding Appendix for the antenna type that you plan to install:

- Appendix B “14 dBi Directional Antenna”
- Appendix C “7 dBi Omni-Directional Base Station Antenna”
- Appendix D “10 dBi Omni-Directional Base Station Antenna”
- Appendix E “12 dBi Directional Wide Angle Antenna”
- Appendix F “24 dBi Directional Parabolic Grid Antenna”

When mounting multiple antennas on a single mast, use the following methods to minimize the influence of cross-talk interference between the antennas:

- Place your antennas as far apart as you can.
- Alternate the mounting of directional antennas for vertical and horizontal polarization.

  Consult the mounting instructions for your antenna as described in the appendices listed above for options and instructions to mount the antennas for different polarization.

Connecting the Antenna Cable

Once the antenna is properly installed, you can connect the antenna to the ORiNOCO Wireless System via the ORiNOCO Surge Arrester.

1. First connect the antenna cable to the antenna
2. Secure the antenna cable to the mast such that the cable connectors do not support the full weight of the cable.
3. Connect the opposite end of the antenna cable to the ORiNOCO Surge Arrester.

NOTE:
To avoid damage to the antenna cable and connectors, refrain from using appliances to tighten the cable connectors

4. Prior to securing the cable along its complete length, run the Wireless Link Test diagnostics of the OR Manager program to analyze wireless performance and optimal placement of the outdoor antenna (see Figure 2-4 on page 2-13). How to use this program is described in the "ORiNOCO OR Manager - User's Guide" that was shipped with the Outdoor Router hardware, and/or can be downloaded from the ORiNOCO website at: **http://www.lucent.com/orinoco**.
5. If required, adjust the direction of the antenna.
6. Once the installation has been fully tested, tighten the nuts of the antenna to 'lock' the antenna into its position.

CAUTION:
Avoid overtightening of the connectors, and nuts and screws used to mount the antenna, to prevent damage to your ORiNOCO Outdoor Router hardware.

7. Secure the cable along its complete length using cable ties or electrical tape to properly strain relieve the antenna connector.

   No part of the cable should be allowed to hang free. This is especially important for those parts that are routed outside the building.
8. Proceed as described below to weather-proof all outdoor coax connectors.

Sealing the Cable Connectors

Most problems associated with wireless outdoor installations are related to degrading performance due to the effects of corrosion of the antenna cable and cable connectors. To avoid this type of problems, you must always seal the cable connectors that are located outdoors using the weather proofing tape provided.

You are advised to seal the connectors only after you have verified optimal alignment of the antennas using the Wireless Link Test as described in the "ORiNOCO OR Manager - User's Guide". Doing so will enable you to adjust antenna placement and cable routing without removing the tape.

1. Prepare the cable and connectors so that they are free from dust, dirt and grease.
2. Attach the tip of the weather proofing tape to the cable just above the connector.
3. Holding the tape in its position, now stretch the tape and wind it half-lapped around the cable and connectors to form a void-free joint.

   The degree of stretch may vary in different sections of the joint, as long as the overlaps accomplish a void-free application.

To protect the weather-proofing stretch tape from the effects of Ultra-Violet (UV) radiation (for example from direct sun-light), you should protect the joint with two half-lapped layers of any vinyl plastic electrical tape. Alternatively, you can apply silicone sealer to protect the weather-proofing tape from sunlight, rain and other weather conditions.

The Antenna Cabling System

A

The Outdoor Cabling Components

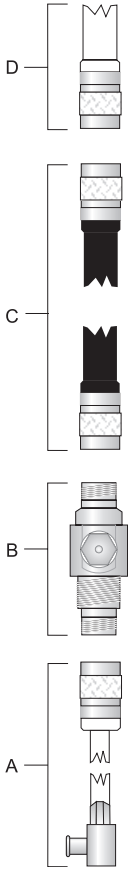

To connect your Outdoor Router hardware to an outdoor antenna installation you will need the following cabling components as pictured on the right side of this page:

a. The ORiNOCO Cable Assembly

b. The ORiNOCO Surge Arrester

c. A Low-Loss Antenna Cable

d. One of the outdoor antennas described in Appendices B through F.

When purchasing new ORiNOCO Outdoor Router products, each of the components listed above will be equipped with Standard N-Type connectors.

When ordering separate components, for example as a spare part or replacement to previously purchased Lucent ORiNOCO outdoor antenna equipment carefully read the note on the following page to ensure that you order components with an N-Type connector that matches the other parts of your Outdoor Antenna Cabling System.

Selecting the Correct Connector-Type

All cabling components of the ORiNOCO Outdoor Antenna system come with Standard-N type connectors as pictured in Table A-1 below.

Table A-1 Standard N-Type Connector Diagram

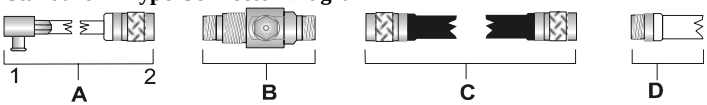

Cabling Component	Standard-N Cabling Systems
A Cable Assembly	1 Proprietary Connector 2 Standard-N Male
B Surge Arrester	Standard-N Female on both ends
C Low-loss Cable	Standard-N Male on both ends
D Outdoor Antenna	Standard-N Female 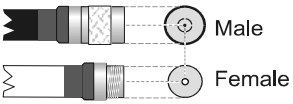

Please Note: The gender of the connector is *NOT* determined by the connector's thread, but its *center pin*;
A solid center pin = Male, a hollow pin = Female.

NOTE:

Previously marketed ORiNOCO outdoor antenna systems in FCC regulated countries (e.g. USA & Canada) were shipped with a different cabling system, identified by Reverse Polarity-N connectors (pictured in Table A-2 on page A-4).

If you are looking for replacement parts, or wish to extend a previously installed Reverse Polarity-N cabling system, please consult your Authorized ORiNOCO Reseller. You can use Table A-2 to:

- Determine the type of cabling system currently installed.
- Determine what type of spare part or converter you will need if you intend to upgrade or replace a previously installed outdoor cabling system.

Table A-2 Reverse Polarity-N Cabling Diagram

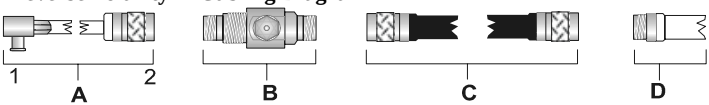

Cabling Component	Reverse Polarity-N Cabling Systems
A Cable Assembly	1 Proprietary Connector 2 Rev. Polarity-N Female
B Surge Arrester	Rev. Polarity-N Male on both ends
C Low-loss Cable	Rev. Polarity-N Female on both ends
D Outdoor Antenna	Rev. Polarity-N Male 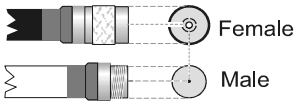

Please Note: The gender of the connector is *NOT* determined by the connector's thread, but its *center pin*;
A solid center pin = Male, a hollow pin = Female.

DANGER:

Outdoor antennas and antenna cables are electrical conductors. Transients or electrostatic discharges that may occur at the antenna (for example a lightning strike during thunderstorms) may damage your electronic equipment and cause personal injury or death to persons touching the exposed metal connectors of the antenna cable.

To avoid damage and personal injury, the entire antenna cabling system must be grounded at all times.
When installing, disconnecting or replacing one of the cabling components, you must ensure at all times that each exposed metal connectors of the antenna cabling system will be grounded locally during the work.

For example when mounting or replacing the ORiNOCO Surge Arrester:

1. First connect each of the connectors of the low-loss antenna cables to the grounding system.
2. Next connect the cable connector of the ORiNOCO Cable Assembly to the grounding system.

3. Finally connect the ORiNOCO Surge Arrester to the grounding system.

Before you proceed, verify that each of the items is properly grounded, and that the ground will not interrupted when disconnecting one of the antenna system components.

Check with a qualified electrician if you are in doubt as to whether the surge arrester, and cable connectors are properly grounded.

Only after you have verified that each of the items is properly grounded, replace the surge arrester and re-connect the cables in exactly the reverse order of the previous steps.

ORiNOCO Cable Assembly

The ORiNOCO Cable Assembly is the Lucent Technologies proprietary cable to connect ORiNOCO PC Cards to an outdoor antenna system.

On the end that is connected to the ORiNOCO card, the cable assembly has the Lucent Technologies proprietary connector.

The N-Type connector at the opposite end will match the polarity of the N-connectors of the other outdoor antenna cabling system components.

Table A-3 Specifications Cable Assembly

Mechanical	
Length	50 cm (19.5 in.)
Connectors[1]	■ Proprietary ORiNOCO PC Card Connector ■ Standard-N (Male)
Operating Temperature	- 40°C to +85°C
Electrical	
Frequency Range	800-2500 MHz
Insertion Loss	0.9 dB

1 See also “Selecting the Correct Connector-Type” on page A-2

CAUTION:

The Lucent proprietary connector that fits into the ORiNOCO PC Card has been designed for “fixed installations” only, allowing for occasionally disconnecting and reconnecting the outdoor antenna cabling system when needed. Repeatedly (dis)connecting the Cable Assembly, will wear out the connectors and void Warranty of the Cable Assembly product.

ORiNOCO Surge Arrester

The ”ORiNOCO Surge Arrester” (sometimes also referred to as “Lightning Protector”) can protect your sensitive ORiNOCO equipment from high-voltage surges caused by discharge and transients at the antennas.

Figure A-1 Mounting the ORiNOCO Surge Arrester

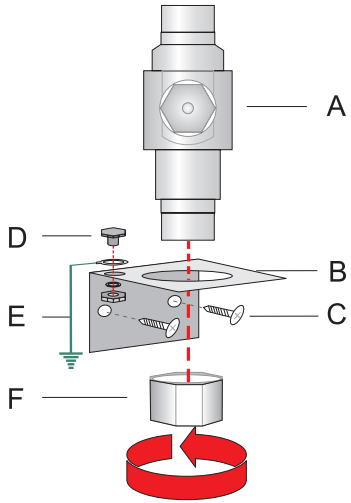

To mount the ORiNOCO Surge Arrester:

1. Determine a suitable location for the bracket (item B) as described in Chapter 2 “Preparing for Installation”.
2. Use the screws (item C) to attach the bracket the wall.
3. Apply a ring-terminal to the ground wire, and use the bolt, lock-washer and nut (item D) to connect the ground-wire (item E) to the mounting bracket.

   The ring-terminal and ground wire are not included, but must be installed by a certified electrician that is familiar with national electricity & safety codes, according the instructions described under “Grounding System” on page 2-12
4. Next insert the ORiNOCO Surge Arrester (item A” into the bracket as pictured in Figure A-1.
5. Use the hex-nut (item F) to secure the ORiNOCO Surge Arrester in its position, and ensure that the Protector is properly connected to the grounding system.

WARNING:
To avoid damage to electronic equipment and your ORiNOCO equipment always apply the "ORiNOCO Surge Arrester" between the outdoor antenna installation and the Outdoor Router hardware or other computing device that is connected to the outdoor antenna(s).

Table A-4 Specifications Surge Arrester

Mechanical		
Size		
	Height	69 mm (2.7 in.)
	Diameter	26 mm (1 in.)
Weight		133 g (4.7 oz.)
Connectors[1]		Standard-N (Female on both ends)
Operating Temperature		- 40°C to +85°C
Electrical		
Frequency Range		800-2500 MHz
Insertion Loss		0.2 dB
Surge Current		2000 Amp
Nominal Impedance		50 Ohms

1 See also "Selecting the Correct Connector-Type" on page A-2

Low-Loss Antenna Cable

The low-loss antenna cable is available in three standard lengths.

- Specifications 6m (20 ft) Antenna Cable.
- Specifications 15m (50 ft) Antenna Cable.
- Specifications 22m (75 ft) Antenna Cable.

CAUTION:

To ensure you order the right cable length, carefully determine the distance between the intended locations of the Outdoor Router hardware and outdoor antenna.

Table A-5 Specifications 6m (20 ft) Antenna Cable.

Mechanical Specifications		
Length	6 meter (20 ft)	
Connectors[1]	Standard-N (Male on both ends)	
Operating Temperature	- 40°C to +85°C	
Diameter[2]	5 mm (0.2 in.)	10 mm (0.4 in.)
Weight	32,75 gram/meter (0.022 lbs/ft)	101.2 gram/meter (0.068 lbs/ft))
Bend Radius	50 mm (2 in.)	100 mm (4 in.)
Electrical Specifications		
Insertion Loss	0.55 dB/meter (16.9 dB/100 feet)	0.22 dB/meter (6.8 dB/100 feet)
Total for this cable	< 4.0 dB	< 2.0 dB

1 See also “Selecting the Correct Connector-Type” on page A-2

2 Use of the 10 mm diameter version of this cable is subject to local radio regulations. Consult Appendix G “Certified Outdoor Solutions” for information whether you are allowed to use this cable in your country.

Table A-6 Specifications 15m (50 ft) Antenna Cable

Mechanical Specifications	
Length	15 meter (50 ft)
Connectors[1]	Standard-N (Male on both ends)
Operating Temperature	- 40°C to +85°C
Diameter	10 mm (0.4 in.)
Weight	101.2 gram/meter (0.068 lbs/ft)
Bend Radius	100 mm (4 in.)
Electrical Specifications	
Insertion Loss	0.22 dB/meter (6.8 dB/100 feet)
Total for this cable	< 4.0 dB

1 See also “Selecting the Correct Connector-Type” on page A-2

Table A-7 Specifications 22m (75 ft) Antenna Cable

Mechanical Specifications	
Length	22 meter (75 ft)
Connectors[1]	Standard-N (Male on both ends)
Operating Temperature	- 40°C to +85°C
Diameter	10 mm (0.4 in.)
Weight	101.2 gram/meter (0.068 lbs/ft)
Bend Radius	100 mm (4 in.)
Electrical Specifications	
Insertion Loss	0.22 dB/meter (6.8 dB/100 feet)
Total for this cable	< 5.7 dB

1 See also “Selecting the Correct Connector-Type” on page A-2

14 dBi Directional Antenna

B

General Description

14 dBi Directional Antenna is a High-Gain ORiNOCO Antenna for the 2.4 GHz frequency band.

This antenna is typically used in combination with ORiNOCO Outdoor Routers in Remote slave Mode.

The 14 dBi Directional Antenna is a totally enclosed 16 element Yagi antenna that has been designed for point-to-point communications.

It has a typical VSWR of 1.5:1 and is less than 2:1 over the entire frequency band. The gain is 14 dBi and the half-power beamwidth is 30 degrees. This antenna is normally mounted on a mast and is vertically polarized.

Contents of the Antenna Box

- One encapsulated antenna
- Metal Backing Plate for the antenna
- 2 U-bolts, with 2 bolt heads (for mast mounting)
- 4 flat-washers, and 4 nuts
  (to attach the antenna to the U-bolts or screws)

Mounting the Directional Antenna

You can mount the Lucent Technologies 14 dBi Directional Antenna to a mast or a flat vertical surface, such as a wall.

In most cases mounting the antenna to a mast will allow for more flexibility in adjusting the height and direction of the antenna to aim it at the opposite end of the wireless link.

Mounting to a Mast

To mount the antenna to a mast proceed as follows:

1. Verify if you have all the items listed below:
   - The ORiNOCO 2.4 GHz antenna
   - The 2 U-bolts and bolt heads provided
   - The 4 flat washers and 4 nuts provided
   - A socket wrench to tighten the nuts
2. Note the arrows on the mounting plate.
3. Mount the antenna with the arrows pointing up.
4. Attach the antenna to the mast as pictured in Figure B-1 on page B-2, using the U-bolts and bolt heads, the Metal Backing Plate and nuts.
5. Proceed with “Connecting the Antenna Cable” on page 4-6.

CAUTION:
Always place flat washers between heads (or nuts) and the plastic mounting plate. Avoid overtightening the nuts and screws to prevent damage to the mounting plate.

Figure B-1 Mounting the 14 dBi Antenna to a Mast

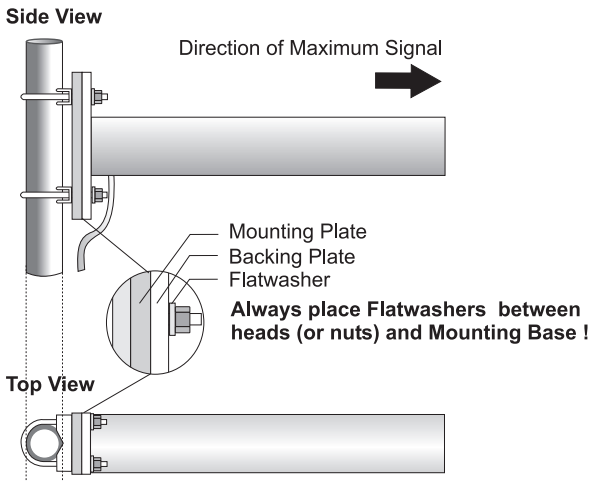

Mounting on a Flat Surface

For mounting the antenna to a flat vertical surface, you must provide a smooth surface for the antenna mount. On wall surfaces such as brick, block or stucco, use an intermediate surface such as a plywood board or metal plate between the wall and antenna. The intermediate surface will need to be of sufficient strength to prevent distortion of the antenna base when the mounting hardware is tightened.

To mount the antenna proceed as follows:

1. Verify if you have all the items listed below:
   - The ORiNOCO 2.4 GHz antenna
   - (optional) an intermediate plate
   - 4 plugs and screws
   - 4 flat washers
   - An electric drill
   - A screwdriver to tighten the screws

Figure B-2 Mounting the 14 dBi Antenna to a Wall

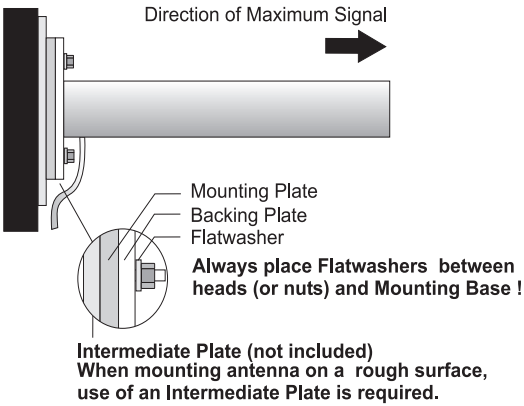

2. Note the arrows on the mounting plate.
3. Mount the antenna with the arrows pointing up.
4. Attach the antenna using the intermediate plate, Metal Backing Plate and flat washers as shown in Figure B-2.
5. Proceed with “Connecting the Antenna Cable” on page 4-6.

CAUTION:
Always use flat washers between the screws and the plastic mounting plate. Avoid overtightening nuts and screws to prevent damage to the mounting plate.

Table B-1 Specifications 14 dBi Directional Antenna

Mechanical		
■ Size		45.7 cm (18 in.)
■ Mounting Method		■ Vertical or horizontal mast with an outside diameter between 28 mm (1.102 in.) and 41 mm (1.625 in.) using u-bolts.
		■ Wall using plugs and screws.
Cable	■ Type	RG-58A/U, 50 ohm low-loss coax
	■ Length	80 cm (31.5 in.)
	■ Color	White
Connector[1]		Standard-N (Female)
Electrical		
■ Frequency Range		2.4 GHz
■ VSWR		Less than 2:1, 1.5:1 Nominal
■ Nominal Impedance		50 Ohms
■ Gain		14 dBi
■ Front-to-Back Ratio		greater than 20 dB
Half-Power Beamwidth		
	■ Elevation Plane (vertical)	30.8 Degrees
	■ Azimuth Plane (horizontal)	31.4 Degrees
	■ Polarization	■ Linear Vertical (standard mounting) ■ Horizontal (when mounted differently - see “Mounting the Directional Antenna” on page B-1).
Antenna Environment		
■ Operating Temperature		- 40°C (-40°F) to +60°C (140°F)
■ Wind/survival		At least 200 km/h (124 mph.)[2]

1 See also “Selecting the Correct Connector-Type” on page A-2
2 At least 100 km/h (62 mph) with 1.25 cm (0.5 in.) ice.

Figure B-3 Azimuth Plane (Horizontal)

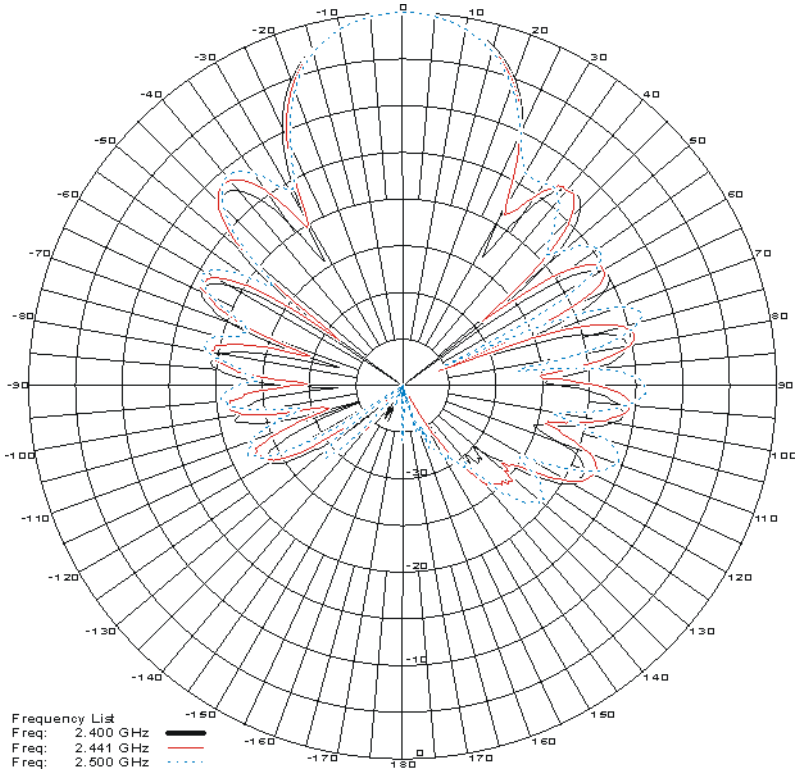

Figure B-4 Elevation Plane (Vertical)

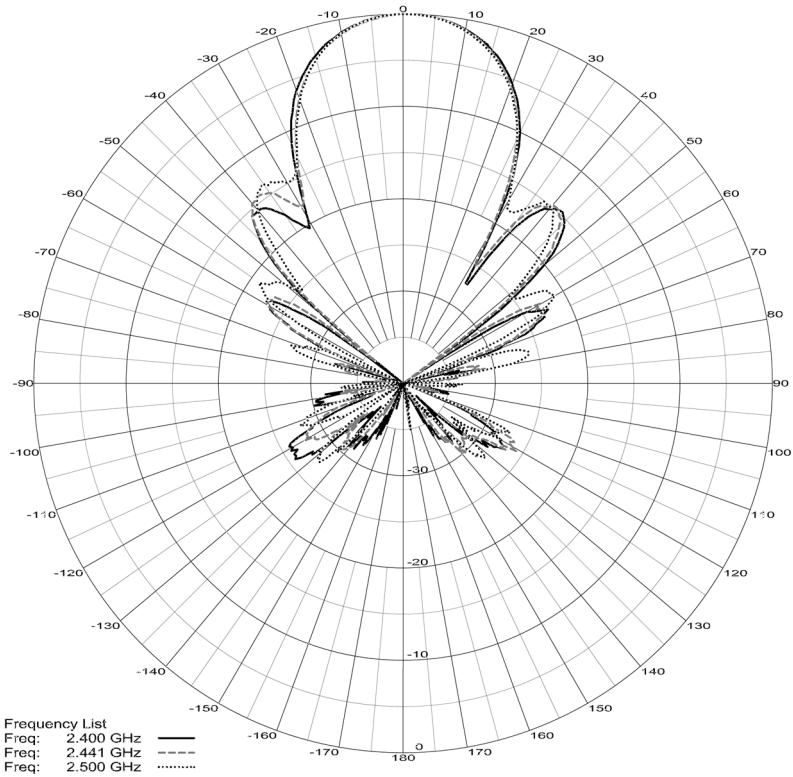

7 dBi Omni-Directional Base Station Antenna

C

Hardware Specifications

The Lucent Technologies 7 dBi Omni-Directional Base Station Antenna is a broadband antenna for the 2.4 GHz frequency band featuring an omni-directional pattern with a nominal gain of 7 dBi.

The pole-type antenna is enclosed in a weatherproof protective covering (“radome”). This vertically polarized antenna can be mounted to an antenna mast with an outside diameter of up to 65 mm (2.5 in).

For detailed specifications see Table C-1 on page C-3.

Mounting the Omni-directional Antenna

You can mount the 7 dBi MHz antenna to a mast only. This antenna uses Vertical Polarization which is the most common type of polarization for omni-directional antennas.

Mounting to a Mast

To mount the antenna to a mast proceed as follows:

1. Verify that you have all the items listed below:
   - The ORiNOCO 7 dBi Pole Antenna
   - The O-shaped Metal Bracket,.
   - The U-bolt, nuts and lock washers
   - A small wrench to tighten the nuts
2. Position the Bracket (identified as item D in Figure C-1 on page C-2) to the top of the antenna mast (item B).
3. Place the U-bolt (item C) around the antenna mast, and slide its ends through the corresponding holes of the bracket.

4. Use the lock-washers (item E) and nuts (item F) to secure the bracket to the mast.

   Use a wrench to tighten the nuts and ensure the bracket will be fixed to the top of the mast.
5. Next feed the antenna cable of the 7 dBi omni-directional Base Station antenna (item A) through the hole of the mounting bracket.
6. Slide the antenna down, until its metal base is enclosed by the mounting bracket as pictured in Figure C-1.

Figure C-1 Mounting the 7 dBi Antenna to a Mast

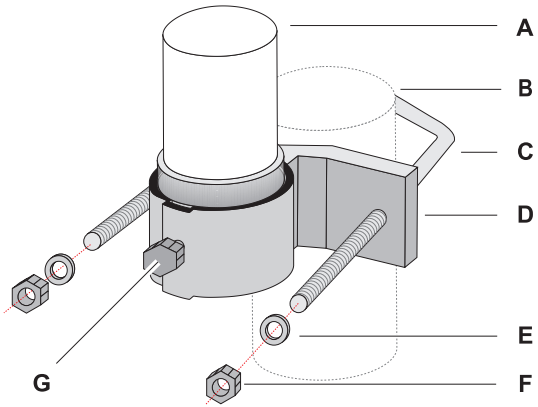

7. Use a wrench to tighten the bracket bolt (item G) to fix the antenna into its position.

CAUTION:
Avoid overtightening the hose-clip nut to avoid damage to the clip and your antenna.

8. Proceed with “Connecting the Antenna Cable” on page 4-6 to connect the antenna to the indoor equipment and seal the antenna connectors.

Table C-1 Specifications 7 dBi Omni-Directional Base Station Antenna

Mechanical	
■ Size	43,2 cm (17 in.)
■ Mounting method	Clamps to vertical mast with outside diameter between 35 mm (1.4 in.) and 65 mm (2.55 in.)
Connector[1]	Standard-N (female)
Electrical	
■ Frequency Range	2.4 GHz
■ VSWR	Less than 2:1 Nominal
■ Nominal Impedance	50 Ohms
■ Gain	7 dBi
■ Polarization	Linear Vertical
Antenna Environment	
■ Operating Temperature	- 40°C (-40°F) to +60°C (140°F)
■ Wind/survival	At least 200 km/h (124 mph)[2]

1 See also “Selecting the Correct Connector-Type” on page A-2

2 At least 100 km/h (62 mph) with 1.25 cm (0.5 in.) ice.

Figure C-2 Azimuth Plane (Horizontal)

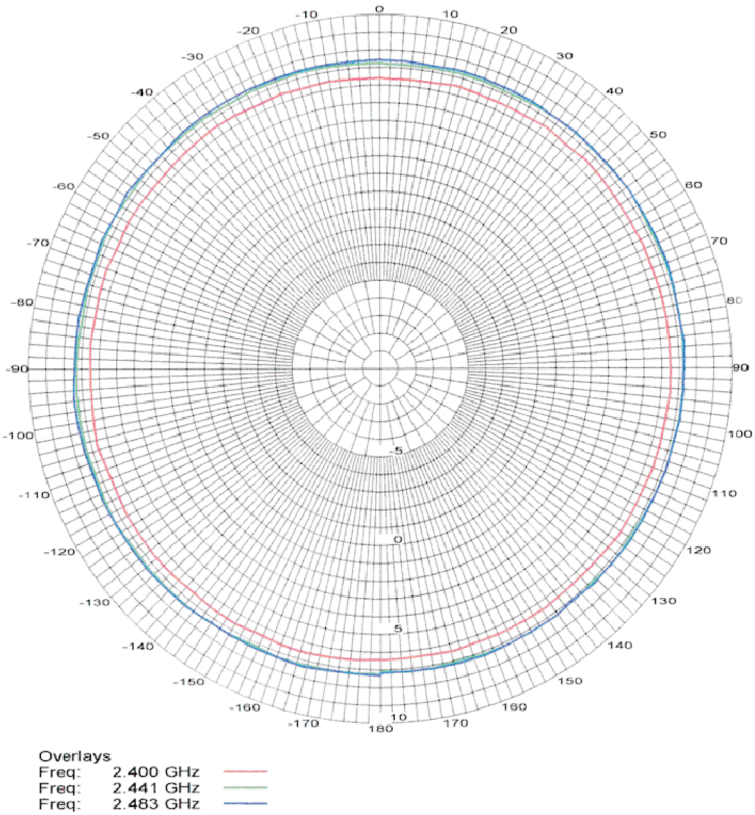

Figure C-3 Elevation Plane (Vertical)

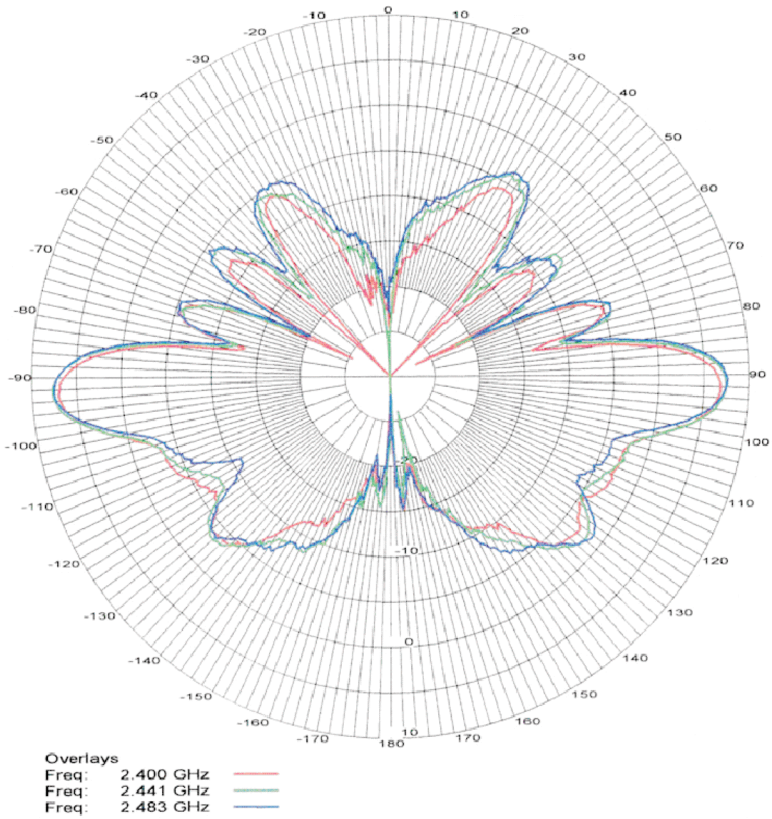

10 dBi Omni-Directional Base Station Antenna

D

Hardware Specifications

The Lucent Technologies 10 dBi Omni-Directional Base Station Antenna is a broadband antenna for the 2.4 GHz frequency band featuring an omni-directional pattern with a nominal gain of 10 dBi.

This antenna is typically used in combination with ORiNOCO/Centrals in Master mode.

The pole-type antenna is enclosed in a weatherproof protective covering (“radome”). This vertically polarized antenna can be mounted to an antenna mast with an outside diameter of up to 51 mm (2.0 in).

For detailed specifications see Table D-1 on page D-2.

CAUTION:
When selecting an antenna location, please ensure general precautions so as to avoid possible contact with electrical power lines. Refer to the National Electrical Code for proper grounding of the antenna mast.

Mounting Instructions

1. Attach the ferrule of the antenna to the mounting bracket with two u-bolts as shown inFigure D-1 on page D-2.
2. Next use the remaining two u-bolts to attach the mounting bracket to the mast. Tighten nuts to 9 Nm (7 ft.-lbs).
3. Proceed with “Connecting the Antenna Cable” on page 4-6 to connect the antenna to the indoor equipment and seal the antenna connectors.

Figure D-1 Mounting the 10 dBi Antenna

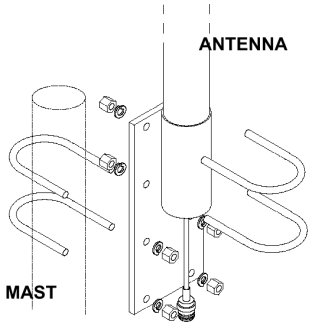

Table D-1 Specifications 10 dBi Omni-Directional Base Station Antenna

Mechanical			
■ Size		91.4 cm (36 in.)	
■ Mounting method		Clamps to vertical mast with outside diameter between 35 mm (1.4 in.) and 51 mm (2.0 in.)	
Cable			
	■ Type	RG-303, 50 ohm low-loss coax	
	■ Length	25 cm (10 in.)	
	■ Color	Tan	
Connector[1]		Standard-N (female)	
Electrical			
■ Frequency Range		2.4 GHz	
■ VSWR		Less than 2:1 Nominal	
■ Nominal Impedance		50 Ohms	
■ Gain		10 dBi	
■ Polarization		Linear Vertical	
Antenna Environment			
■ Operating Temperature		+60°C (140°F) - 40°C (-40°F)	
■ Wind/survival (mph)		At least 240 km/h (150 mph)[2]	

1 See “Selecting the Correct Connector-Type” on page A-2

2 At least 200 km/h (124 mph) with 1.25 cm (0.5 in.) ice.

Figure D-2 Azimuth Plane (Horizontal)

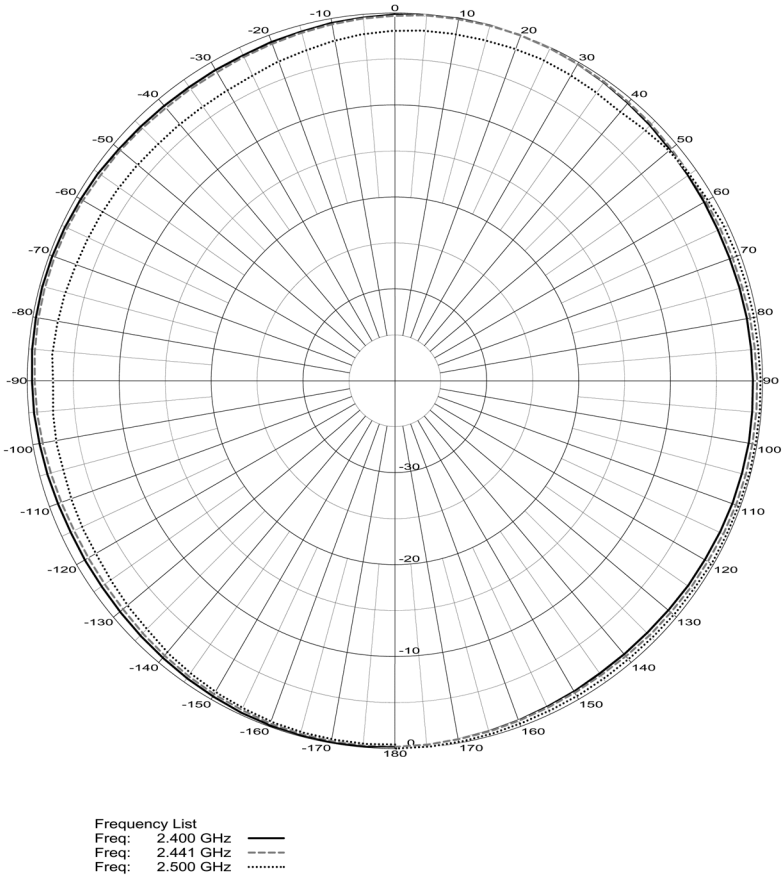

Figure D-3 Elevation Plane (Vertical)

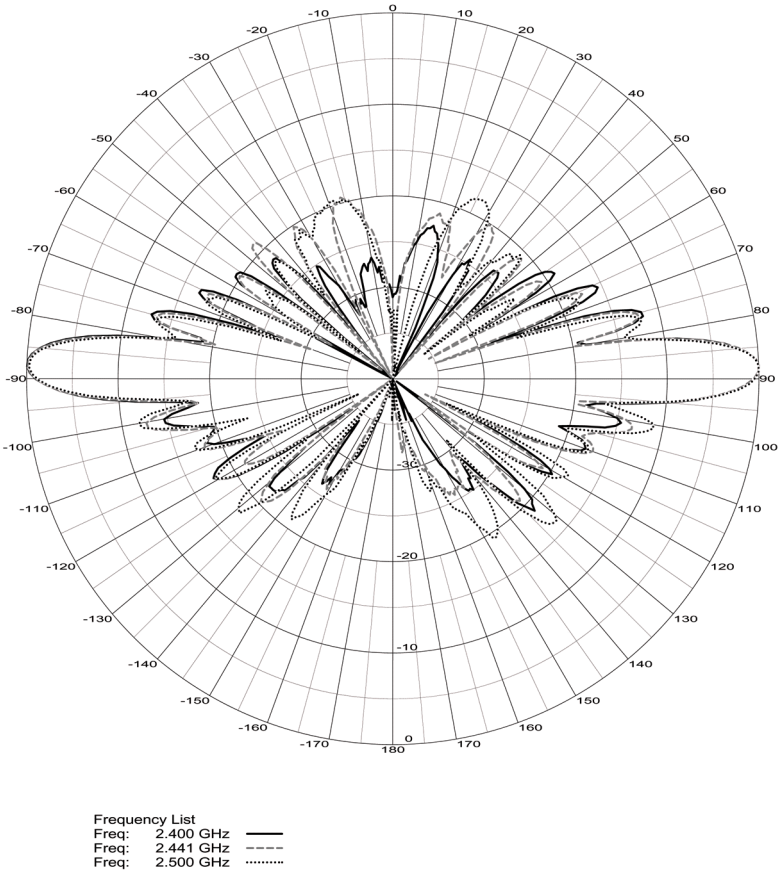

12 dBi Directional Wide Angle Antenna

E

Hardware Specifications

The Lucent Technologies 12 dBi Directional Wide Angle Antenna is for the 2.4 GHz frequency band is a perfect match between the features of the:

- Directional Antennas described in Appendix B “14 dBi Directional Antenna” and Appendix F “24 dBi Directional Parabolic Grid Antenna”
- Omni-Directional Antennas described in Appendix C “7 dBi Omni-Directional Base Station Antenna” and Appendix D “10 dBi Omni-Directional Base Station Antenna”.

Typically used in combination with ORiNOCO/Central. This antenna can be mounted to an antenna mast with an outside diameter of up to 51 mm (2.0 in.).

Mounting Instructions

CAUTION:
When selecting an antenna location, please ensure General Precautions are met so as to avoid possible contact with electrical power lines. Refer to the National Electrical Code for proper grounding of the antenna mast.

1. Attach the u-bolts, tube mounting bracket, upper mounting bracket, and lower mounting bracket to the mast and spaced as shown in Figure E-1 on page E-2.

Figure E-1 Mounting the 12 dBi Wide Angle Antenna

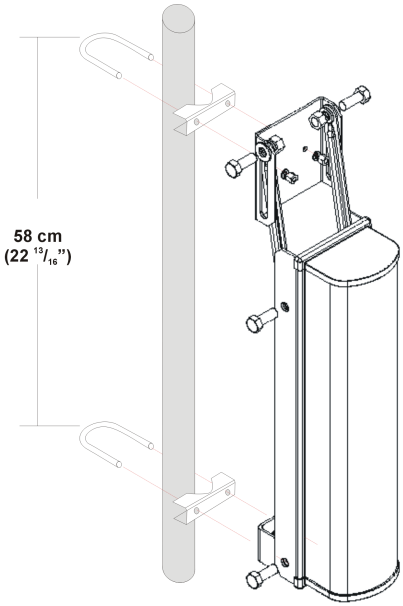

2. Assemble the angle adjustment brackets to the upper mounting bracket with 1/2” bolts, lock washers, flat washers and nuts.
3. Next assemble the angle adjustment brackets and lower mounting brackets to the antenna base plate with 1/2” bolts, lock washers, and nuts.

   This adjustment is for 0 degree mounting.

   To adjust from 0 to -20 degrees, loosen the hardware at both ends of the angle adjustment bracket and slide it in the slot to the preferred angle.
4. Tighten hardware securely. The U-bolts should be tightened to 9 Nm (7 ft.-lbs).
5. Proceed with “Connecting the Antenna Cable” on page 4-6 to connect the antenna to the indoor equipment and seal the antenna connectors.

Table E-1 Specifications 12 dBi Directional Wide Angle Antenna

Mechanical		
■ Size (LxWxD)	181x53.7x76 cm (21.1x7.1x3.0 in.))	
■ Mounting method	Clamps to vertical mast with outside diameter between 35 mm (1.4 in.) and 51 mm (2.0 in.)	
Connector[1]	Standard-N (female)	
Electrical		
■ Frequency Range	2.4 GHz	
■ VSWR	Less than 2:1 Nominal	
■ Nominal Impedance	50 Ohms	
■ Gain	12 dBi	
■ Polarization	Linear Vertical	
Half-Power Beamwidth		
■ Elevation Plane (vertical)	13 Degrees	
■ Azimuth Plane (horizontal)	125 Degrees	
Antenna Environment		
■ Operating Temperature	+60°C (140°F) - 40°C (-40°F)	
■ Wind/survival (mph)	At least 200 km/h (124 mph)[2]	

1 See “Selecting the Correct Connector-Type” on page A-2

2 At least 100 km/h (62 mph) with 1.25 cm (0.5 in.) ice.

Figure E-2 Azimuth Plane (Horizontal)

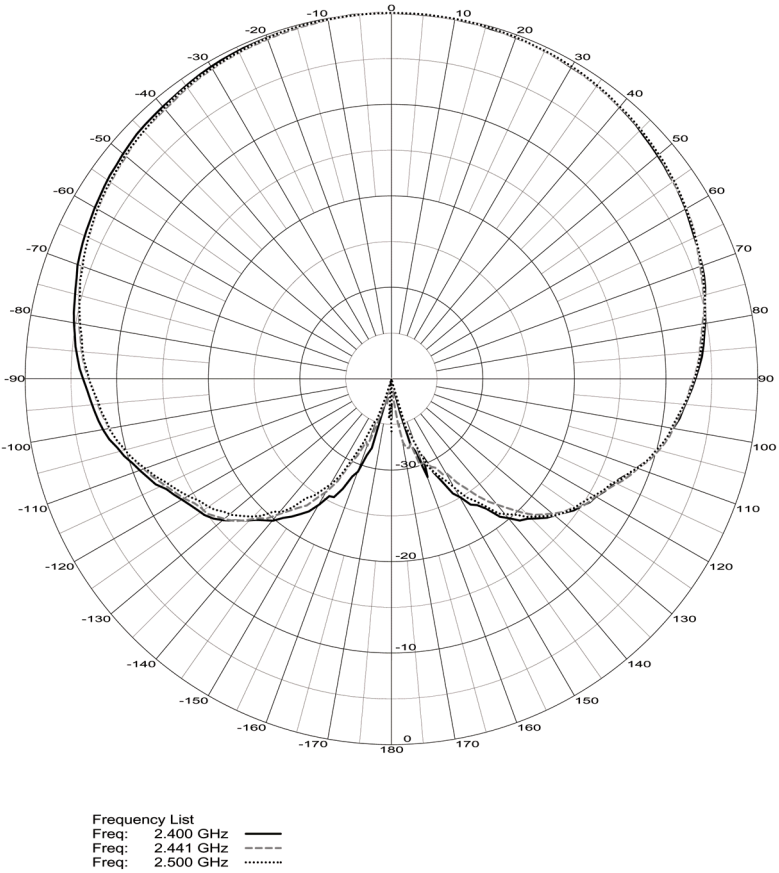

Figure E-3 Elevation Plane (Vertical)

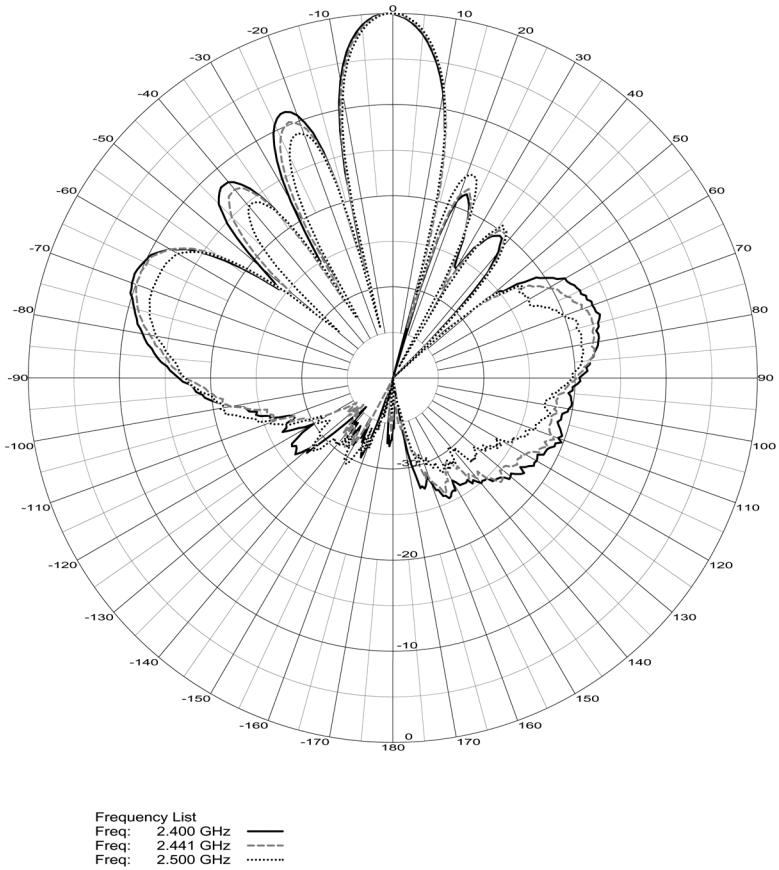

24 dBi Directional Parabolic Grid Antenna

F

Hardware Specifications

The Lucent Technologies 24 dBi Directional Parabolic Grid Antenna is a broadband antenna for the 2.4 GHz frequency band.

The grid-type antenna that allows for either horizontal or vertical mounting on a antenna mast with an outside diameter of up to 51 mm (2 in). For detailed specifications see Table F-1 on page F-5.

This antenna is typically used in combination with ORiNOCO Outdoor Routers in Remote slave Mode.

WARNING:

The 24 dBi Directional Parabolic Grid Antenna is not allowed in countries that adhere to the ETSI radio regulations, France and Japan. In countries that adhere to the FCC regulations, use of this antenna is only allowed when operated with specific ORiNOCO radio channels that can be set at the ORiNOCO/Outdoor Router. Appendix G "Certified Outdoor Solutions" describes which channels are allowed or not.

Prior to purchasing or installing the 24 dBi Directional Parabolic Grid Antenna, please consult "Certified Outdoor Solutions" on page G-1 for more information.

Kit Contents

The 24 dBi Directional Parabolic Grid Antenna comes in two boxes with the following contents:

PACKED IN FEED BOX:

- 1 Feed assembly
- 1 Sub-reflector
- 1 #6 x 1/2” stainless screw
- 2 Stainless 1/4 x 20 hex nuts
- 2 Stainless lock washers
- 2 Stainless carriage bolts

PACKED IN REFLECTOR BOX

- 2 Reflector halves
- 2 Stainless U-bolts
- 2 Mast clamps
- 1 Mounting “L” shaped bracket
- 4 Keps nuts (4) #8-32 machine screws
- 6 Stainless 1/4 x 20 hex nuts
- 6 Stainless lock washers
- 2 Stainless carriage bolts
- 1 Stainless flat plate washer

NOTE:
Prior to installation, or climbing the roof, verify if all parts and components are included. If any part is missing or appears to be damaged, please consult your authorized Lucent Technologies Reseller.

Assembling the Antenna

1. Assemble the two halves inserting the 4 #8-32 machine screws through the front. Secure with the keps nuts on the back.

NOTE:
Loosely tighten all hardware until completely assembled and then tighten securely.

Figure F-1 Assemble the Reflector

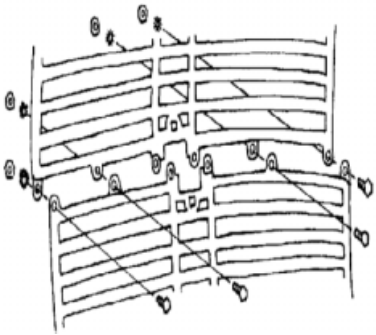

2. Place the sub-reflector on the front of the feed and secure with the #6 x 1/2”stainless screw.
3. Determine the polarity of the antenna (see Figure F-2).
   - Horizontal Polarity, (the reflector ribs and the sub reflector at the front end of the antenna are aligned horizontally).
   - Vertical Polarity: (the reflector ribs and the sub reflector at the front end of the antenna are aligned vertically).

Figure F-2 Determine Polarization

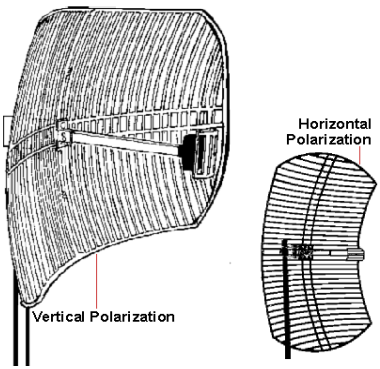

Polarity of the antenna must always be the same as the polarity of the antenna on the opposite side of the link!

4. Place the “L” bracket on the back of the antenna.

5. Insert two carriage bolts from the front to attach.

Figure F-3 Attach the mounting Bracket

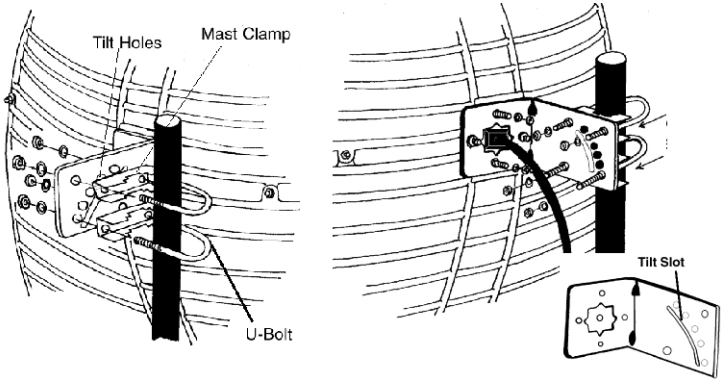

6. Secure on the back with the lock washers and nuts as pictured in Figure F-3).
7. Re-check the dipole feed assembly for the proper polarity.
8. Attach the feed on the front with 2 carriage bolts. Secure on the back with the lock washers and nuts.

Mounting the Antenna

DANGER:
Installation of antenna near power lines is dangerous! Before you proceed, make sure you have read and understood the safety precautions as described in Chapter 2 “Preparing for Installation”.

1. Before climbing the roof, make sure you have:
   - The assembled antenna
   - The U-bolts and mast clamps to mount the grid antenna to the mast.
2. Determine the desired alignment of the antenna:
   - For horizontal alignment you will need both U-bolts and the 4 lock washers and nuts.
   - For tilted alignment, you will only use a single U-bolt and two lock washers and nuts. This mounting method allows you to mount the antenna with an elevation in 10^0 degree increments

WARNING:
Tilted alignment is not suitable for environments where the antenna is subject to high wind conditions.

3. Place the U-bolt(s) around the mast as pictured in Figure F-3 on page F-4.
4. Slide the mast clamps over the U-bolts as pictured in Figure F-3 on page F-4.
5. Finally slide the “L”-Bracket over the U-bolts, and fasten the grid antenna to the U-bolts using the lock washers and nuts.

   For tilted elevation mounting, use the flat plate washer on the adjustable tilt slot to mount and secure the antenna to the desired elevation angle.
6. Proceed with “Connecting the Antenna Cable” on page 4-6 to connect the antenna to the indoor equipment and seal the antenna connectors.

Table F-1 Specifications 24 dBi Directional Parabolic Grid Antenna

Mechanical		
■ Size (HxWxD)	61,0x91,4x38,1 cm (24x36x15 in.)	
■ Mounting method	Clamps to vertical mast with outside diameter between 26 mm (1.102 in.) and 51 mm (2.0 in.)	
Cable ■ Type	RG-8A/U, 50 ohm low-loss coax	
■ Length	60 cm (24 in.)	
■ Color	Black	
Connector[1]	Standard-N (female)	
Electrical		
■ Frequency Range	2.4 GHz	
■ VSWR	Less than 2:1 Nominal	
■ Nominal Impedance	50 Ohms	
■ Gain	24 dBi	
■ Polarization	■ Linear Vertical for standard mounting ■ Horizontal when mounted differently (see “Mounting the Antenna” on page F-4)	
Half-Power Beamwidth (at vertical polarization)		
■ Elevation Plane (vertical)	10 Degrees	
■ Azimuth Plane (horizontal)	6.5 Degrees	
Antenna Environment		
■ Operating Temperature	+60°C (140°F) - 40°C (-40°F)	
■ Wind/survival (mph)	At least 200 km/h (124 mph)[2]	

1 See “Selecting the Correct Connector-Type” on page A-2

2 At least 100 km/h (62 mph) with 1.25 cm (0.5 in.) ice.

Figure F-4 Azimuth Plane (Horizontal)

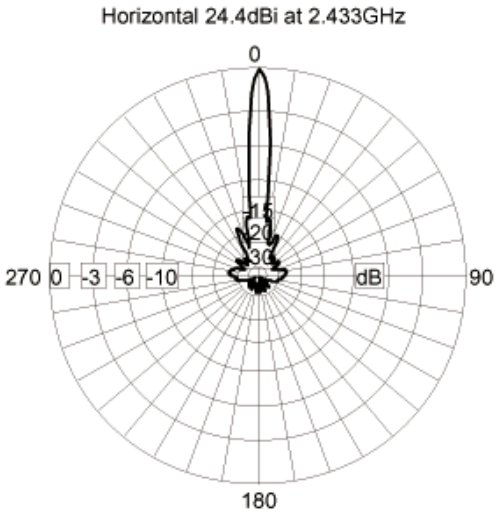

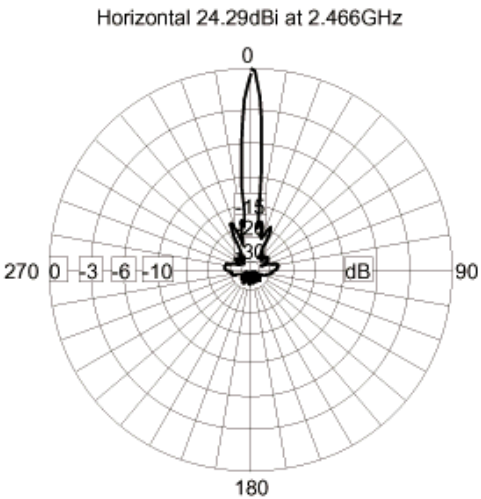

Figure F-5 Elevation Plane (Vertical)

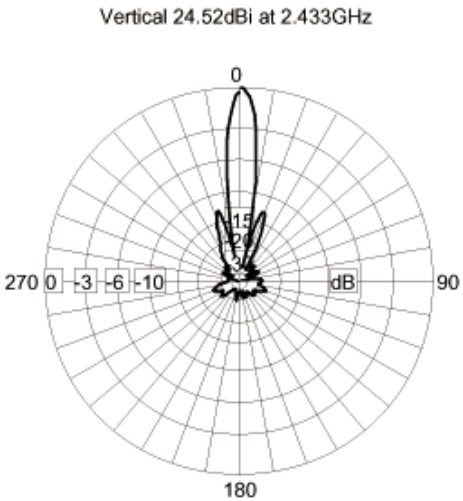

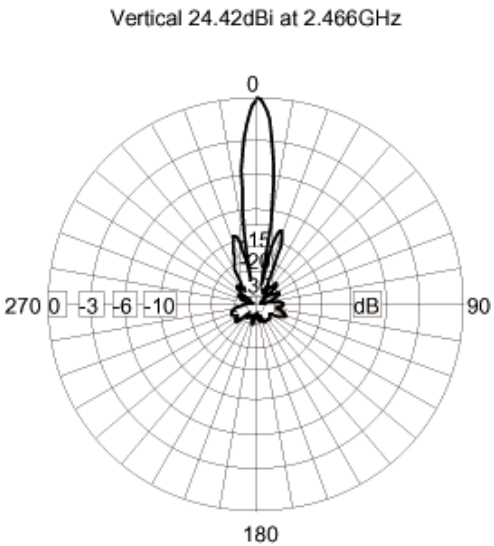

Certified Outdoor Solutions

G

Introduction

As radio regulations differ between the various countries world-wide, not all of the outdoor solutions described in this ORiNOCO Outdoor Antenna Installation Guide may be allowed in the country where you plan to install this equipment.

Local radio regulations or legislation may impose restrictions on the use of specific combinations of:

- PC Cards and Outdoor Antennas
- Low-loss antenna cables and Outdoor Antennas
- Radio channels selected at ORiNOCO Outdoor Router devices that are connected to specific Outdoor Antennas.

NOTE:

Basic rule for selecting a combination of cards, cables and antennas is that no combination is allowed unless explicitly approved in this ORiNOCO Outdoor Antenna Installation Guide. Therefore, always use this Appendix in combination with Chapter 3 “Determine Range & Clearance” of this document to:

- Select the right type of antenna equipment
- Inform your antenna installer and/or LAN Administrator about the impact of regulatory constraints on their job/activities.

WARNING:

At all times, it will be the responsibility of the end-user to ensure that an outdoor antenna installation complies with local radio regulations.[1]

The end-user must verify that:

- *The antenna installer is aware of these regulations.*
- *The correct type of ORiNOCO card is used to connect the host device to the outdoor antenna installation.*
- *The correct type of cables and surge arrester have been used, according to the instructions described in this document.*

Lucent Technologies and its resellers or distributors are not liable for any damage or violation of government regulations that may arise from failing to comply with these guidelines.

1 In case you are not certain about the regulations that apply in your country, consult your local Lucent Technologies Sales Office.

Selecting the Right Card & Cables

To comply with local radio regulations, Lucent Technologies offers two types of ORiNOCO Cards, that can be used to connect a Outdoor Router or other computing device to an outdoor antenna installation:

- Standard black-colored ORiNOCO PC Card
- Red-colored ORiNOCO Fixed Wireless PC Card

Also are the low-loss antenna cables available in various lengths and diameters:

- 6 m (15 ft.) with a diameter of 5 mm (0.2 in.)[1]
- 6 m (15 ft.) with a diameter of 10 mm (0.4 in.)
- 15 m (50 ft.) with a diameter of 10 mm (0.4 in.)
- 22 m (75 ft.) with a diameter of 10 mm (0.4 in.)

When you order the ORiNOCO outdoor antenna equipment, make sure that you order card & cables that comply with the regulations that apply in your country. In case of doubt, please consult the Lucent Technologies Sales office for more information.

FCC Regulated Countries

In countries that adhere to the regulations as defined by the US Federal Communications Commission (FCC), you can use the standard black-colored ORiNOCO PC Card in combination with all antennas. However restrictions apply when using the card in combination with the 24 dBi Directional Parabolic Grid Antenna (consult Table G-2 on page G-5 for allowed channel settings).

1 The cable-loss of this cable is equal to the loss of the 15 m (50 ft.) cable.

ETSI Regulated Countries

In countries that adhere to the regulations as defined by the European Telecommunications Standards Institute (ETSI), France and Japan, you must select the card-type based upon the antenna and cable that will be used.

- The 24 dBi Directional Parabolic Grid Antenna is not allowed in ETSI countries, france or Japan.
- For ETSI/France and Japan radio approvals, the various card/cable/antenna combinations have all been certified with the red-colored ORiNOCO Fixed Wireless PC Card.
- The only antenna/cable combination that allows for using a black-colored ORiNOCO PC Cards, is the 7 dBi Omni-Directional Base Station Antenna in combination with the 6m (20ft) cable with 5 mm (0.2 in.) diameter, or the 15 m (50ft.) or 25 m (75 ft.) cables.

Consult Table G-3 on page G-6 for allowed combinations.

Table G-1 Certified Cable/Antenna Combinations FCC

Antenna	Antenna Cable type			
	6m (20 ft.) 5 mm (0.4 in.)	6m (20 ft.) 10 mm (0.4 in.)	15m (50 ft.) 10 mm (0.4 in.)	25m (75 ft.) 10 mm (0.4 in.)
7 dBi Omni-Directional Base Station Antenna	NA	Yes	Yes	Yes
10 dBi Omni-Directional Base Station Antenna	NA	Yes	Yes	Yes
12 dBi Directional Wide Angle Antenna	NA	Yes	Yes	Yes
14 dBi Directional Antenna	NA	Yes	Yes	Yes
24 dBi Directional Parabolic Grid Antenna[1]	NA	Yes	Yes	Yes

1 Consult Table G-2 for restrictions on channel selection

Table G-2 Certified Channel/Antenna Combinations FCC

Antenna	Frequency Channels										
	1	2	3	4	5	6	7	8	9	10	11
7 dBi Omni-Directional Base Station Antenna	Yes	Yes	Yes	Yes	Yes	Yes	Yes	Yes	Yes	Yes	Yes
10 dBi Omni-Directional Base Station Antenna	Yes	Yes	Yes	Yes	Yes	Yes	Yes	Yes	Yes	Yes	Yes
12 dBi Directional Wide Angle Antenna	Yes	Yes	Yes	Yes	Yes	Yes	Yes	Yes	Yes	Yes	Yes
14 dBi Directional Antenna	Yes	Yes	Yes	Yes	Yes	Yes	Yes	Yes	Yes	Yes	Yes
24 dBi Directional Parabolic Grid Antenna	No	No	Yes	Yes	Yes	Yes	Yes	Yes	Yes	No	No

Table G-3 Certified Cable/Antenna Combinations ETSI

Antenna	Antenna Cable type			
	6m (20 ft.) 5 mm (0.2 in.)	6m (20 ft.) 10 mm (0.4 in.)	15m (50 ft.) 10 mm (0.4 in.)	25m (75 ft.) 10 mm (0.4 in.)
7 dBi Omni-Directional Base Station Antenna	Yes (black card)	Yes	Yes (black card)	Yes (black card)
10 dBi Omni-Directional Base Station Antenna	Yes	Yes	Yes	Yes
12 dBi Directional Wide Angle Antenna	Yes	Yes	Yes	Yes
14 dBi Directional Antenna	Yes	No	Yes	Yes
24 dBi Directional Parabolic Grid Antenna	No	No	No	No

Table G-4 Certified Channel/Antenna Combinations ETSI

Antenna	Frequency Channels												
	1	2	3	4	5	6	7	8	9	10	11	12	13
7 dBi Omni-Directional Base Station Antenna	Yes	Yes	Yes	Yes	Yes	Yes	Yes	Yes	Yes	Yes	Yes	Yes	Yes
10 dBi Omni-Directional Base Station Antenna	Yes	Yes	Yes	Yes	Yes	Yes	Yes	Yes	Yes	Yes	Yes	Yes	Yes
12 dBi Directional Wide Angle Antenna	Yes	Yes	Yes	Yes	Yes	Yes	Yes	Yes	Yes	Yes	Yes	Yes	Yes
14 dBi Directional Antenna	Yes	Yes	Yes	Yes	Yes	Yes	Yes	Yes	Yes	Yes	Yes	Yes	Yes
24 dBi Directional Parabolic Grid Antenna	No	No	No	No	No	No	No	No	No	No	No	No	No

NOTE:

All solutions listed in the tables above are based on combinations using the ORiNOCO Fixed Wireless PC Card (red antenna cap), unless indicated otherwise.

Regulatory Information

The Lucent Technologies outdoor antenna solution must be installed and used in strict accordance with the instructions as described in this ORiNOCO Outdoor Antenna Installation Guide.

For country-specific approvals, please consult the flyer "Information to the User" that was shipped with your ORiNOCO PC Card.

Please Note:

Radio approvals for the Lucent Technologies outdoor antenna solution are valid only when using the exact combination of Lucent Technologies PC Cards, outdoor antenna cabling components and antennas as listed in this ORiNOCO Outdoor Antenna Installation Guide.

Using other combinations of parts and components in outdoor antenna solutions will void the radio type approval and may be in violation of local radio regulations.

Lucent Technologies and its authorized resellers or distributors are not liable for any damage or violation of government regulations that may arise from failing to comply with these guidelines.

Support & Warranty

H

Technical Support

If you encounter problems when installing or using this product, please consult the ORiNOCO website at: **http://www.lucent.com/orinoco** for:

- the latest software, user documentation and product updates
- the Frequently Asked Questions (FAQ)

Alternatively please contact your local authorized ORiNOCO reseller for Technical Support.

Help us helping you by completing the ORiNOCO problem report form and include it with your e-mail or fax when contacting Technical Support.
You can find the problem report form (**report.txt**) on:

- the ORiNOCO CD-ROM, and
- the support pages of the ORiNOCO website.

Addresses of authorized ORiNOCO resellers are listed in the “Contact & Ordering” section of the ORiNOCO website.

Warranty and Repair

If it appears that your unit needs a repair or replacement, return to your Dealer/ Distributor in its original packaging.

When returning a defective product for Warranty, always include the following documents:

- The Warranty Repair card (last page of this appendix), and
- A copy of the invoice/proof of purchase
- Problem Report Form (see “Technical Support” on page H-1“).

Lucent Technologies extends a limited warranty from date of purchase of:

- Thirty-six (36) months for ORiNOCO hardware products
- Twelve (12) months for the ORiNOCO Access Points and Outdoor Routers
- Twelve (12) months for the media on which the software is furnished and the reproduction of the software on the media.

Upon proof-of-purchase Lucent Technologies shall at its option, repair or replace the defective item at no cost to the buyer.

Defective items shall be returned to the dealer/distributor:

- Freight prepaid.
- Accompanied by a copy of proof-of-purchase.
- Accompanied by a filled out Warranty/Repair card.

This warranty is contingent upon proper use in the application for which the products are intended and does not cover products which have been modified without the seller’s approval or which have been subjected to unusual physical or electrical demands or damaged in any way.

This Warranty constitutes the sole and exclusive remedy of any buyer or seller’s equipment and the sole and exclusive liability of Lucent Technologies in connection with the products and is in lieu of all other warranties, express, implied or statutory, including, but not limited to, any implied warranty of merchantability of fitness for a particular use and all other obligations or liabilities of Lucent Technologies.
In no event will Lucent Technologies Inc. or any other party or person be liable to you or anyone else for any damages, including lost profits, lost savings or other incidental or consequential damages, or inability to use the software provided on the software media even if Lucent Technologies or the other party person has been advised of the possibility of such damages.

To be filled out by the User:

Product Description:
COMCODE (Product ID):
Serial Number:
Invoice Date: (dd/mm/yyyy)
Name:
Title:
Company:
Address:
City/State/Zipcode:
Country:
Telephone:
Fax:
Email:

To be filled out by the Dealer/ Distributor:

Dealer Name:	
Address:	
City/State/Zipcode:	
Country:	
Telephone:	
Fax:	
Warranty	**Comment**
❑ **Yes**	
❑ **No**	

Return Approval Reference:

Reported Problem:		**Problem Description:**
❑	Out-of-Box Failure	
❑	Other	

Index

A

Antenna
- alignment 2-12
- cable A-9
- cable routing 2-14
- connecting 4-6
- connectors C-3
- mounting 4-5
- mounting directional B-1
- mounting omni-directional C-1
- placement 2-8

Antenna Cable
- 15 m (50 ft) A-10
- 22m (75 ft) A-10
- 6 m (20 ft) A-9
- routing 2-6
- sealing connectors 4-7

Antenna Mast
- grounding 2-12
- placement 2-11
- requirements 2-11
- wall (side) mount 2-11

Antenna Radiation Patterns B-5, B-6, C-4, C-5, D-3, D-4, E-4, E-5, F-6, F-7

Antenna, polarization 2-13

Azimuth Plane B-5, C-4

C

Cable Assembly, specifications A-6

Cable Factor 3-7

Check-List 2-15

Clearance 3-9
- areas with obstacles 3-10
- dense urban areas 3-10
- determine 3-1
- line-of-sight 2-10
- open areas 3-10

Clearance Factor 3-8

Connector
- antenna B-4

Connectors
- antenna cable A-9
- Surge Arrester A-8

D

Diagnostics
- OR Manager 2-12

E

Elevation Plane B-6, C-5, D-4, E-5, F-7

F

Fresnel Zone 3-9

G

Gain 3-1

Grounding System 2-12

H

Horizontal Plane, see Azimuth Plane B-5, C-4, D-3, E-4, F-6

I

Information, diskettes 1-3
Information, finding additional 1-2
Installation, overview outdoor 2-8
Installation, site prerequisites 2-1

L

Lightning Protector
  see Surge Arrester 2-5
  specifications A-8

M

Mounting
  directional antenna B-1

O

OR Manager
  tool 2-12
  User's Guide 2-12
  Wireless Link Test 2-13
ORiNOCO Surge Arrester A-7
Outdoor Router
  hardware 2-3
  hardware installation 2-5
  placement 2-3
Output Power 3-1

P

Performance
  seasonal factors 2-10
  weather conditions 2-10
Point-to-Point 1-4

R

Range 3-2
  Cable Factor 3-7
  calculating 3-2
  Clearance Factor 3-8
Remote Link Test
  see Wireless Link Test 2-12
Remote Outdoor Router 1-4
RF Obstacles 2-9

S

Safety, precautions 4-1
Sealing 4-7
Sensitivity 3-1
Specifications
  15m (50 ft) cable A-10
  22m (75 ft) cable A-10
  6m (20 ft) cable A-9
  cable assembly A-6
  Surge Arrester A-8
Surge Arrester
  placement 2-5

V

Vertical Plane, see Elevation Plane
  B-6, C-5, D-4, E-5, F-7

List of Figures

Figure 1-1	ORiNOCO Point-to-Point Link	1-4
Figure 1-2	ORiNOCO Point-to-Multipoint Link	1-5
Figure 2-1	Overview Indoor Installation of the Outdoor Router	2-2
Figure 2-2	Overview Indoor Installation Outdoor Router Client	2-4
Figure 2-3	Potential Obstacles for a Directional Antenna	2-9
Figure 2-4	OR Manager Wireless Link Test	2-13
Figure 3-1	Fresnel Zone	3-9
Figure 3-2	Clearance Factor Diagram	3-11
Figure 3-3	Calculating the Point-to-Point Range	3-13
Figure 3-4	Calculating the Point-to-Multipoint Range	3-16
Figure A-1	Mounting the ORiNOCO Surge Arrester	A-7
Figure B-1	Mounting the 14 dBi Antenna to a Mast	B-2
Figure B-2	Mounting the 14 dBi Antenna to a Wall	B-3
Figure B-3	Azimuth Plane (Horizontal)	B-5
Figure B-4	Elevation Plane (Vertical)	B-6
Figure C-1	Mounting the 7 dBi Antenna to a Mast	C-2
Figure C-2	Azimuth Plane (Horizontal)	C-4
Figure C-3	Elevation Plane (Vertical)	C-5
Figure D-1	Mounting the 10 dBi Antenna	D-2
Figure D-2	Azimuth Plane (Horizontal)	D-3
Figure D-3	Elevation Plane (Vertical)	D-4
Figure E-1	Mounting the 12 dBi Wide Angle Antenna	E-2
Figure E-2	Azimuth Plane (Horizontal)	E-4
Figure E-3	Elevation Plane (Vertical)	E-5
Figure F-1	Assemble the Reflector	F-3
Figure F-2	Determine Polarization	F-3
Figure F-3	Attach the mounting Bracket	F-4
Figure F-4	Azimuth Plane (Horizontal)	F-6
Figure F-5	Elevation Plane (Vertical)	F-7

List of Tables

Table 3-1	Maximum Outdoor Range for FCC Products	3-5
Table 3-2	Maximum Range for ETSI/FR/JP Products	3-6
Table 3-3	Calculate the Cable Factor	3-7
Table 3-4	FCC Outdoor Range with 10 m (33 ft.) Clearance	3-12
Table A-1	Standard N-Type Connector Diagram	A-3
Table A-2	Reverse Polarity-N Cabling Diagram	A-4
Table A-3	Specifications Cable Assembly	A-6
Table A-4	Specifications Surge Arrester	A-8
Table A-5	Specifications 6m (20 ft) Antenna Cable.	A-9
Table A-6	Specifications 15m (50 ft) Antenna Cable	A-10
Table A-7	Specifications 22m (75 ft) Antenna Cable	A-10
Table B-1	Specifications 14 dBi Directional Antenna	B-4
Table C-1	Specifications 7 dBi Omni-Directional Base Station Antenna	C-3
Table D-1	Specifications 10 dBi Omni-Directional Base Station Antenna	D-2
Table E-1	Specifications 12 dBi Directional Wide Angle Antenna	E-3
Table F-1	Specifications 24 dBi Directional Parabolic Grid Antenna	F-5
Table G-1	Certified Cable/Antenna Combinations FCC	G-5
Table G-2	Certified Channel/Antenna Combinations FCC	G-5
Table G-3	Certified Cable/Antenna Combinations ETSI	G-6
Table G-4	Certified Channel/Antenna Combinations ETSI	G-6