Edge™ Multipoint and Quickbridge

Safety and Regulatory Guide

Products Covered

Edge™

- MP-1045-CPE
- MP-1055-CPE
- MP-1045-BS3
- MP-1055-BS3
- QB-1045-LNK (2 x QB-1045-EPR)
- QB-1055-LNK (2 x QB-1055-EPR)

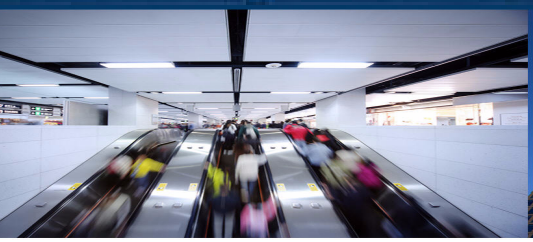

proxim® AN SRA COMPANY

Copyright

© 2022 Proxim Wireless Corporation, San Jose, CA. All rights reserved. Covered by one or more of the following U.S. patents: 5,231,634; 5,875,179; 6,006,090; 5,809,060; 6,075,812; 5,077,753. The content described herein are copyrighted with all rights reserved. No part of this publication may be reproduced, transmitted, transcribed, stored in a retrieval system, or translated into any language in any form by any means without the written permission of Proxim Wireless Corporation.

Trademarks

Edge™, Proxim® and the Proxim logo are the trademarks of Proxim Wireless Corporation. All other trademarks mentioned herein are the property of their respective owners.

Disclaimer

Proxim reserves the right to revise this publication and to make changes in content from time-to-time without obligation on the part of Proxim to provide notification of such revision or change. Proxim may make improvements or changes in the product(s) described in this guide at any time. When using these devices, basic safety precautions should always be followed to reduce the risk of fire, electric shock and injury to persons.

GPL License Note

Edge™ products include, in part, some free software that is developed by Free Software Foundation. A user is granted license to this software under the terms of either the GNU General Public License or GNU Lesser General Public License (See http://www.gnu.org/licenses/licenses.html). This license allows the user to freely copy, modify and redistribute this software and no other statement or documentation from us. To get a copy of this software, or for any other information, please contact our customer support team).

OpenSSL License Note

Edge™ products contains software developed by the OpenSSL Project for use in the OpenSSL Toolkit (http://www.openssl.org/) and that is subject to the following copyright and conditions:

Copyright (c) 1998-2016 The OpenSSL Project. All rights reserved.

The names "OpenSSL Toolkit" and "OpenSSL Project" must not be used to refer to, endorse, or promote the products or for any other purpose related to the products without prior written permission. For written permission, please contact openssl-core@openssl.org.

This software is provided by the OpenSSL Project "as is" and any expressed or implied warranties, including, but not limited to, the implied warranties of merchantability and fitness for a particular purpose are disclaimed. In no event shall the OpenSSL Project or its contributors be liable for any direct, indirect, incidental, special, exemplary, or consequential damages (including, but not limited to, procurement of substitute goods or services; loss of use, data, or profits; or business interruption) however caused and on any theory of liability, whether in contract, strict liability, or tort (including negligence or otherwise) arising in any way out of the use of this software, even if advised of the possibility of such damage.

Edge™ Multipoint and Quickbridge - Safety and Regulatory Guide

Documentation Version: 1.0

P/N 765-00411, February 2022

Preface 4

1 MP/QB-10xx Series - Regulatory Information 5

Safety Information 5

Federal Communications Commission (FCC) Compliance 6

Modifications 6

FCC Radiation Exposure Statement 7

Certification Summary 7

USA (See USA - Certification) 7

UL (See UL - Certification) 7

CB (See CB - Test Certificate) 7

2 Information for Professional Installer 8

Information for Professional Installers 8

Adjusting Tx Output Power 8

Antenna Gain Configuration 9

A USA - Certification 10

D UL - Certification 11

E CB - Test Certificate 16

Preface

About this Guide

This document contains the safety and regulatory compliance information for the following Edge™ products:

- **Edge™ 10xx Series**
  - MP-1045-CPE
  - MP-1055-CPE
  - MP-1045-BS3
  - MP-1055-BS3
  - QB-1045-LNK (2 x QB-1045-EPR)
  - QB-1055-LNK (2 x QB-1055-EPR)

Related Documents

In addition to this guide, please refer to the following documents for *Edge™ Multipoint and Quickbridge* products that are available at Proxim's support site http://support.proxim.com.

- **Quick Installation Guide (QIG)**: A quick reference guide that provides essential information for installing and configuring the device.
- **Device Management Guide** - A guide that gives an overview of the device user interface and explains the step-by-step procedure to configure, manage and monitor the device by using Graphical User Interface.
- **Software Configuration Guide:** A guide that provides software configuration information for Proxim devices.
- **Hardware Installation Guide**: A guide that provides a hardware overview and details about the installation procedures and hardware specifications.
- **CLI Guide** - A guide that gives instructions on how to configure, manage and monitor the device using Command Line Interface.

Proxim recommends you to visit its support site http://support.proxim.com for regulatory information and latest product updates.

MP/QB-10xx Series - Regulatory Information

1

This chapter contains information on the following:

- Safety Information
- Federal Communications Commission (FCC) Compliance
- Industry Canada Compliance
- Certification Summary

1.1 Safety Information

Listed below are the product(s) and their corresponding safety standards that they comply with:

Product(s)	Standards
MP-1045-CPE MP-1055-CPE MP-1045-BS3 MP-1055-BS3 QB-1045-LNK (2 x QB-1045-EPR) QB-1055-LNK (2 x QB-1055-EPR)	IEC/EN 62368-1:2014(Second Edition) IEC/EN 60950-22:2016(Second Edition)

All products are intended to be installed, used, and maintained by experienced telecommunications personnel only.

When using these products, basic safety precautions should always be followed to reduce the risk of fire, electrical shock, and injury to persons, including the following:

- Devices must be installed and used in strict accordance with the manufacturer's instructions as described in the user documentation.
- Installation of these products in the end use must conform to local regulations and codes.
- Devices are to be used with and powered only by the Power Injector provided.
- A 16-amp circuit breaker is required at the power source.
- The devices are intended to be grounded. Use a 12 AWG earthing conductor at a minimum.
- Do not connect or disconnect the power cable from the device when the power injector is plugged into an AC power outlet.
- Devices should be serviced by trained personnels only. Do not disassemble the device. By opening or removing any covers, you may expose yourself to hazardous energy parts. Incorrect reassembly of these devices can cause malfunction and/or electric shock when later used. There are no user serviceable parts; all repairs and services must be handled by a qualified service center.
- Do not insert any objects of any shape or size inside these devices while powered on. Object may contact hazardous energy parts that could result in a risk of fire or personal injury.
- Do not remove or alter the marking label provided on these devices.
- To avoid the risk of electric shock from lightning, do not use these devices during an electrical storm.
- RJ-45 maximum available current is 1.33A.

WARNING: These devices are intended for installation in accordance with Articles 110-18, 110-26, and 110-27, 725, 800, and 810 of the United States National Electric Code ANSINFPA 70.

1.2 Federal Communications Commission (FCC) Compliance

The Edge™ devices comply with the limits for a Class B digital device, pursuant to part 15 of the FCC Rules. These limits are designed to provide reasonable protection against harmful interference in a residential installation. This device generates, uses and can radiate radio frequency energy and, if not installed and used in accordance with the instructions, may cause harmful interference to radio communications. If this device causes harmful interference to radio or television reception, which can be determined by turning the device on and off, the user is encouraged to try to correct the interference by one or more of the following measures:

- Reorient or relocate the receiving antenna
- Increase the separation between the equipment and receiver
- Connect the equipment into an outlet on a circuit different from that to which the receiver is connected
- Consult the dealer or an experienced radio/TV technician for help.

WARNING:

- ***To comply with FCC part 15 rules in the United States, the system must be professionally installed to ensure compliance with the Part 15 certification. It is the responsibility of the operator and professional installer to ensure that only certified systems are deployed in the United States. The use of the system in any other combination (such as co-located antennas transmitting the same information) is expressly forbidden.***

The device operation is subject to the following two conditions:

1. The device may not cause harmful interference
2. The device must accept any interference received, including interference that may cause undesired operation.

This device and its antenna(s) must not be co-located or operate in conjunction with any other antenna or transmitter.

The FCC radio-frequency exposure guidelines for an uncontrolled environment can be satisfied.

1.2.1 Modifications

The FCC requires the user to be notified that any changes or modifications to this device that are not expressly approved by the manufacturer may void the user's authority to operate the device. The correction of interference caused by unauthorized modification, substitution or attachment will be the responsibility of the user. The manufacturer and its authorized resellers or distributors are not liable for any damage or violation of government regulations that may arise from failing to comply with these guidelines.

WARNING:

- ***Modification of this device to receive cellular Radio Telephone service signals is prohibited under FCC Rules and Federal Law.***
- ***Modifications not expressly approved by the manufacturer could void the user authority to operate the equipment under FCC Rules.***

1.2.2 FCC Radiation Exposure Statement

The Edge™ devices comply with FCC radiation exposure limits set forth for an uncontrolled environment.

Tabulated below are the products and the FCC radiation exposure limits followed by the devices:

Product(s)	Standards
MP-1045-CPE MP-1045-BS3 QB-1045-LNK (2 x QB-1045-EPR)	• Product models using external antennas require professional installation. The antennas used for professional installation must be fixed-mounted on outdoor permanent structures with a minimum separation distance of 50 cm from the antenna to the users. Separation distance should be increased if antenna with more than 16 dBi is used. Separation distance can reach up to 300 cm for high gain (34 dBi) parabolic dish. • Antennas must not be co-located and must not operate in conjunction with any other antenna or transmitter.

1.3 Certification Summary

1.3.1 USA (See USA - Certification)

Models	Frequency Band	Certification/Reference Number
MP-1045-CPE-US MP-1045-BS3-US QB-1045-LNK-US (2 x QB-1045-EPR-US)	(4.940 4.990) GHZ (5.150 5.250) GHz (5.725 5.850) GHz	FCC ID: HZB-NGPPS

1.3.2 UL (See UL - Certification)

Models	Certification/Reference Number
MP-1045-CPE MP-1055-CPE MP-1045-BS3 MP-1055-BS3 QB-1045-LNK (2 x QB-1045-EPR) QB-1055-LNK (2 x QB-1055-EPR)	**Pending Certificate**

1.3.3 CB (See CB - Test Certificate)

Models	Certification/Reference Number
MP-1045-CPE MP-1055-CPE MP-1045-BS3 MP-1055-BS3 QB-1045-LNK (2 x QB-1045-EPR) QB-1055-LNK (2 x QB-1055-EPR)	**Pending Certificate**

Information for Professional Installer 2

This chapter contains information on the following:

- Information for Professional Installers
  - Adjusting Tx Output Power
  - Antenna Gain Configuration

2.1 Information for Professional Installers

All products must be professionally installed, and the transmit power of the system must be adjusted by the professional installers to ensure that the system EIRP is in compliance with the limit specified by the regulatory authority of the country of application.

2.1.1 Adjusting Tx Output Power

NOTE: *When the system is set to transmit at the maximum power, professional installers must ensure that the maximum EIRP limit is not exceeded. To achieve this, they may have to add attenuation between the device and the antenna when a high gain antenna is used.*

Use the following formula in combination with the table of EIRP limits in US and EU countries to calculate system transmit power (based on EIRP limits) of these countries:

Tx Power (dBm) = EIRP Limit (dBm) + FL (dB) – G (dB)

where,

Tx Power = Output power measured at the antenna input

EIRP Limit = EIRP limits specified below

FL = Feeder loss including loss of connectors

G = Antenna Gain

Transmit output power can be reduced by using **Automatic Transmit Power Control (ATPC),** or manually setting the **Transmit Power Control (TPC)**. For information to automatically or manually set TPC, refer to **Software Management Guide** available at http://support.proxim.com.

Regulatory Domain	Frequency (MHz)	Max EIRP (dBm)	
		PTP Mode (QB)	PTMP Mode(MP)
US SKU			
United States 4.9GHz	4940 ~ 4990 (Non-DFS)	53 (@ 5MHz) 56 (@ 10 MHz) 59 (@ 20 MHz)	36 (@ 5MHz) 39 (@ 10 MHz) 42 (@ 20 MHz)
United States 5.8GHz	5725 ~ 5850 (Non-DFS)	53	36(Base Station), 53(Subscriber Unit)
United States3 (5.2, 5.8 GHz)	5150 ~ 5250 (Non-DFS)	53	36(Base Station), 53(Subscriber Unit)
	5725 ~ 5850 (Non-DFS)		

IMPORTANT! You must add external attenuation pad if the calculated EIRP is over the limit. If you are at the TPC limit, reduce the power and continue with the attenuation.

2.1.2 Antenna Gain Configuration

When using external antenna, the professional installer should ensure to configure proper antenna gain so that the radio does not exceed the EIRP allowed per regulatory domain.

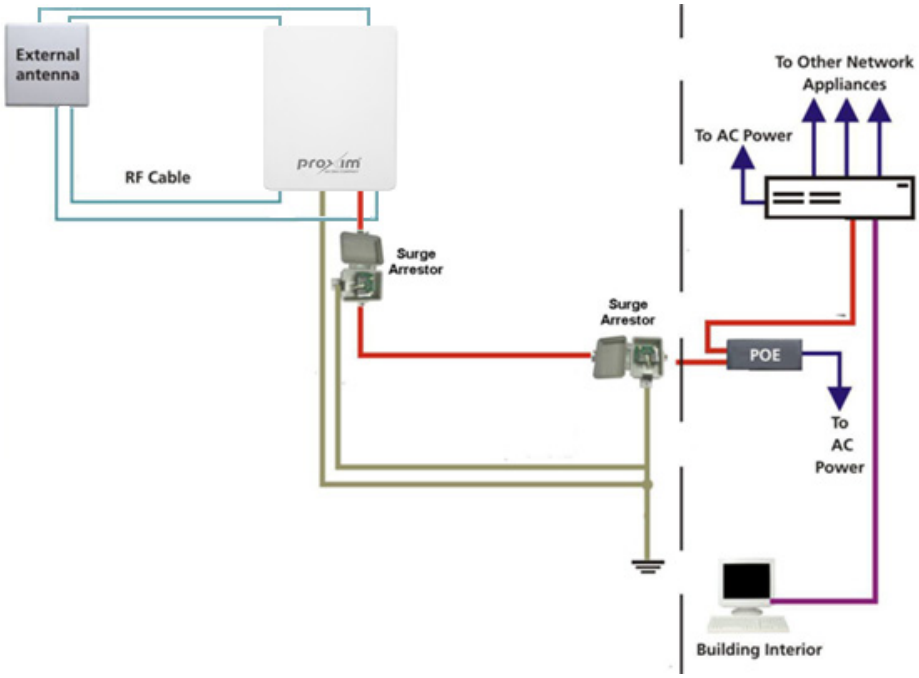

Calculate the antenna gain as follows:

Antenna Gain to be configured = **Antenna Gain of the antenna used** - **Cable Loss**

Example: Consider an example where the device is operating in United States 5.3 GHz with the EIRP 30 dBm. The antenna gain of the antenna used is 23 dBi and the cable loss is 1dB.

Given this case, Configurable Antenna Gain = [23 dBi – 1 dB] = 22 dBi

Maximum Radio Power = EIRP – Configured Antenna Gain

= 30 dBm – 22 dBi

= 8 dBm

With this configuration, the ATPC feature will limit the radio power to a maximum of 8 dBm to avoid exceeding EIRP limit of 30 dBm.

USA - Certification

A

Given below are the USA certification details for the following products:

- MP-1045-CPE-US
- MP-1045-BS3-US
- QB-1045-LNK-US (2 x QB-1045-EPR-US)

D

UL - Certification

Given below are the products with the authorization to use UL Mark:

- MP-1045-CPE
- MP-1055-CPE
- MP-1045-BS3
- MP-1055-BS3
- QB-1045-LNK (2 x QB-1045-EPR)
- QB-1055-LNK (2 x QB-1055-EPR)

CERTIFICATE OF COMPLIANCE

Certificate Number	UL-US-2204615-0
Report Reference	E332763-20220125
Date	27-Jan-2022
Issued to:	PROXIM WIRELESS CORP 2114 Ringwood Avenue San Jose, CA 95131 United States
This is to certify that representative samples of	AZOT - Audio/Video, Information and Communication Technology Equipment See Addendum Page for Product Designation(s). Have been investigated by UL in accordance with the Standard(s) indicated on this Certificate.
Standard(s) for Safety:	UL 62368-1, 2nd Ed., Issue Date: 2014-12-01
Additional Information:	See the UL Online Certifications Directory at https://iq.ulprospector.com for additional information

This Certificate of Compliance does not provide authorization to apply the UL Mark. Only the UL Follow-Up Services Procedure provides authorization to apply the UL Mark.

Only those products bearing the UL Mark should be considered as being UL Certified and covered under UL's Follow-Up Services.

Look for the UL Certification Mark on the product.

Bruce Mahrenholz, Director North American Certification Program

UL LLC

Any information and documentation involving UL Mark services are provided on behalf of UL LLC (UL) or any authorized licensee of UL. For questions, please contact a local UL Customer Service Representative at http://ul.com/aboutul/locations/

CERTIFICATE OF COMPLIANCE

Certificate Number UL-US-2204615-0
Report Reference E332763-20220125
Date 27-Jan-2022

This is to certify that representative samples of the product as specified on this certificate were tested according to the current UL requirements

Model	Category Description
AB-CCCCD-XXX-YYY-ZZ, (Where AB can be MP, QB, XP or AP, CCCC can be 4 digital number for marketing purpose only, no safety concern, D can be 1 alphabet or blank adding extra version information without impact on safety, XXX can be 3 alphabets or blank defining product operational mode (ex. BS3, BSU ,CPE, CPA, EPR, EPA, LNK), YYY can be 3 digital number or blank defining product throughput limitation (ex. 400, 200, 100), ZZ can be 2 alphabet defining Country of Operation (ex. US, WD))	Wireless Ethernet Devices

Bruce Mahrenholz, Director North American Certification Program

UL LLC

Any information and documentation involving UL Mark services are provided on behalf of UL LLC (UL) or any authorized licensee of UL. For questions, please contact a local UL Customer Service Representative at http://ul.com/about/ulocations/

CERTIFICATE OF COMPLIANCE

Certificate Number	UL-CA-2204695-0
Report Reference	E332763-20220125
Date	27-Jan-2022
Issued to:	PROXIM WIRELESS CORP 2114 Ringwood Avenue San Jose, CA 95131 United States
This is to certify that representative samples of	AZOT7 - Audio/Video, Information and Communication Technology Equipment Certified for Canada See Addendum Page for Product Designation(s). Have been investigated by UL in accordance with the Standard(s) indicated on this Certificate.
Standard(s) for Safety:	CSA C22.2 NO. 62368-1-14, 2nd Ed., Issue Date: 2014-12-01
Additional Information:	See the UL Online Certifications Directory at https://iq.ulprospector.com for additional information

This Certificate of Compliance does not provide authorization to apply the UL Mark. Only the UL Follow-Up Services Procedure provides authorization to apply the UL Mark.

Only those products bearing the UL Mark should be considered as being UL Certified and covered under UL's Follow-Up Services.

Look for the UL Certification Mark on the product.

Bruce Mahrenholz, Director North American Certification Program

UL LLC

Any information and documentation involving UL Mark services are provided on behalf of UL LLC (UL) or any authorized licensee of UL. For questions, please contact a local UL Customer Service Representative at http://ul.com/aboutul/locations/

CERTIFICATE OF COMPLIANCE

Certificate Number UL-CA-2204695-0
Report Reference E332763-20220125
Date 27-Jan-2022

This is to certify that representative samples of the product as specified on this certificate were tested according to the current UL requirements

Model	Category Description
AB-CCCCD-XXX-YYY-ZZ, (Where AB can be MP, QB, XP or AP, CCCC can be 4 digital number for marketing purpose only, no safety concern, D can be 1 alphabet or blank adding extra version information without impact on safety, XXX can be 3 alphabets or blank defining product operational mode (ex. BS3, BSU ,CPE, CPA, EPR, EPA, LNK), YYY can be 3 digital number or blank defining product throughput limitation (ex. 400, 200, 100), ZZ can be 2 alphabet defining Country of Operation (ex. US, WD))	Wireless Ethernet Devices

Bruce Mahrenholz, Director North American Certification Program

UL LLC

Any information and documentation involving UL Mark services are provided on behalf of UL LLC (UL) or any authorized licensee of UL. For questions, please contact a local UL Customer Service Representative at http://ul.com/about/locations/

CB - Test Certificate

E

Given below is the CB Test certification for the following products:

- MP-1045-CPE
- MP-1055-CPE
- MP-1045-BS3
- MP-1055-BS3
- QB-1045-LNK (2 x QB-1015-EPR)
- QB-1055-LNK (2 x QB-1025-EPR)

Ref. Certif. No.

DK-123236-UL

IEC SYSTEM FOR MUTUAL RECOGNITION OF TEST CERTIFICATES FOR ELECTRICAL EQUIPMENT (IECEE) CB SCHEME

CB TEST CERTIFICATE

Product	Wireless Ethernet Devices
Name and address of the applicant	PROXIM WIRELESS CORP 2114 Ringwood Avenue San Jose, CA 95131 United States
Name and address of the manufacturer	PROXIM WIRELESS CORP 2114 Ringwood Avenue San Jose, CA 95131 United States
Name and address of the factory	PROXIM WIRELESS CORP 2114 Ringwood Avenue San Jose, CA 95131 United States
Note: *When more than one factory, please report on page 2*	☒ Additional Information on page 2
Ratings and principal characteristics	(Optionally provided on marking plate) 36-56Vdc 26W (for type PCB A Main board) 36-56Vdc 18W (for type PCB B Main board) 36-56Vdc 11W (for type PCB C Main board) by PoE (Power over Ethernet)
Trademark (if any)	Edge™
Customer's Testing Facility (CTF) Stage used	
Model / Type Ref.	AB-CCCCD-XXX-YYY-ZZ ☒ Additional Information on page 2
Additional information (if necessary may also be reported on page 2)	**Additionally evaluated to:** EN 62368-1:2014, EN 62368-1:2014/A11:2017, EN 60950-22:2017 National Difference specified in the CB Test Report ☐ Additional Information on page 2
A sample of the product was tested and found to be in conformity with	IEC 62368-1:2014, IEC 60950-22:2016
As shown in the Test Report Ref. No. which forms part of this Certificate	2021-0093-01-1-A0-C0 issued on 2021-12-21

This CB Test Certificate is issued by the National Certification Body

☐ UL (US), 333 Pfingsten Rd IL 60062, Northbrook, USA
☒ UL (Demko), Borupvang 5A DK-2750 Ballerup, DENMARK
☐ UL (JP), Marunouchi Trust Tower Main Building 6F, 1-8-3 Marunouchi, Chiyoda-ku, Tokyo 100-0005, JAPAN
☐ UL (CA), 7 Underwriters Road, Toronto, M1R 3B4 Ontario, CANADA

For full legal entity names see www.ul.com/ncbnames

Date: 2022-01-19

Signature: Jan-Erik Storgaard

	Ref. Certif. No.
	DK-123236-UL

Factory(ies):
Shenzhen Kingnet Electronics Co Ltd
4-5/F, No.A Building Workshop
Tangtou Community
Shiyan Sub-district, Baoan District Shenzhen, Guangdong, 518108
China

Additional Model Detail(s):
AB-CCCCD-XXX-YYY-ZZ, Where AB can be MP, QB, XP, AP defining product line (ex. MP means Point-to-Multipoint, QB means Point-to-Point, XP means Cross Point, AP means Access Point),
CCCC can be 4 digital number for marketing purpose only, no safety concern ,
D can be 1 alphabet or blank adding extra version information without impact on safety (ex.- R means Rugged),
XXX can be 3 alphabets or blank defining product operational mode (ex. - BS3 means Base Station Unit with antenna and connectors, - BSU means Base Station Unit with connectors, - CPE means Customer Premises Equipment with antenna and connectors, - CPA means Customer Premises Equipment with connectors, - EPR means Point to Point EndPoint with antenna and connectors, - EPA means Point to Point EndPoint with connectors, - LNK means full Point to Point Link with antenna and/or connectors),
YYY can be 3 digits defining product throughput limitation or blank if no limit is set without impact on safety (ex.400 means 400Mbps, 200 means 200Mbps, 100 means 100Mbps) for marking purpose only, no safety concern,
ZZ can be 2 alphabets defining Country of Operation (ex. - US means United States of America, - WD means World, - EU means Europe, - JP means Japan, - TH means Thailand, - CN means China) for marketing purposes only without impact on safety.

Additional information (if necessary)

- ☐ UL (US), 333 Pfingsten Rd IL 60062, Northbrook, USA
- ☒ UL (Demko), Borupvang 5A DK-2750 Ballerup, DENMARK
- ☐ UL (JP), Marunouchi Trust Tower Main Building 6F, 1-8-3 Marunouchi, Chiyoda-ku, Tokyo 100-0005, JAPAN
- ☐ UL (CA), 7 Underwriters Road, Toronto, M1R 3B4 Ontario, CANADA

For full legal entity names see www.ul.com/ncbnames

Date: 2022-01-19

Signature:
Jan-Erik Storgaard