b. Locate the Print Head protection pad and the Card Cleaning Cartridge location tape (see below).

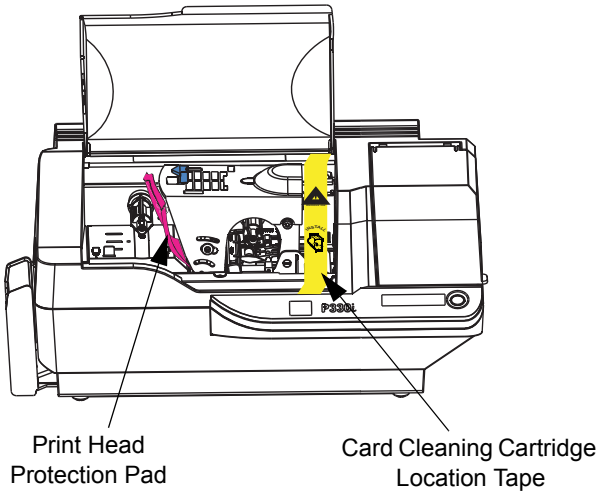

c. Release the Print Head Carriage by pushing the Print Head Carriage Latch to the left, and raise the Print Head Carriage. It will remain open at about a 45° angle.

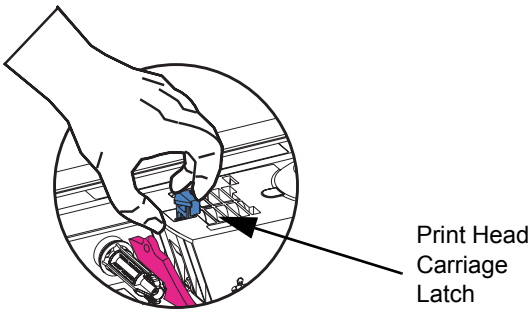

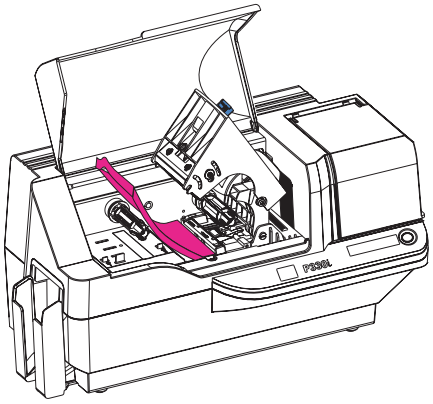

d. Remove the print head protection pad. Keep the pad, as well as the other packing material and the shipping carton, in case the printer is shipped or moved. If the original material is lost, a replacement Shipping Kit can be ordered from Zebra; please refer to the Media List on the Windows Drivers and User Documentation CD supplied with this printer.

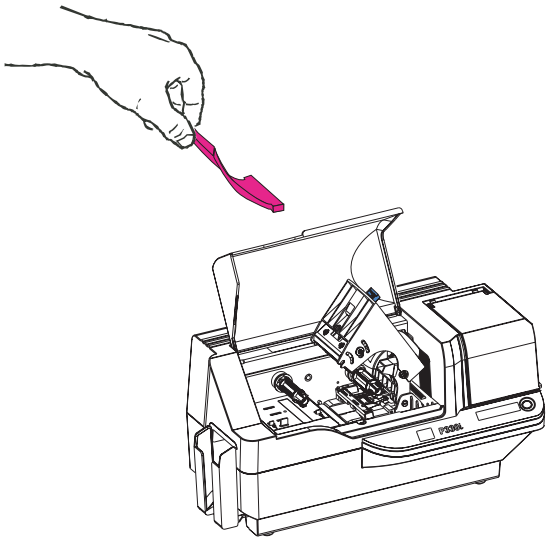

Installing the Print Driver Software and Setting Driver Options

Printing with the P330*i* Printer requires the Windows Printer Driver and your card design/issuing software or printer command level programming through the printer interface.

The P330*i* Card Printer can be used with any Windows 2000 or Windows XP computer, using the drivers provided on CD with the printer.

This section contains information on the printing of a sample card in color (using the 5-panel color ribbon YMCKO and the Windows Printer Driver).

Note • If updating the printer driver from a previous version, before installing the updated printer driver version, always delete the existing version from your computer.

Installing the P330*i* Print Driver

To install the P330*i* Printer Driver automatically on all Operating Systems, use the Zebra Install Wizard.

Note • Ensure that you have administrative privileges to perform this installation, or contact your IT department.

The Install Wizard will walk you through the appropriate installation steps. The Wizard will:

- Automatically launch when the driver CD is inserted.

- From the main menu of your documentation CD, select your desired language and then select “DRIVERS” from the subsequent menu. The Install Wizard will walk you through the appropriate steps.
- Delete previous versions of the driver and clean up any necessary Registry entries. You must select “Remove” from the install options to remove any previous driver versions.

Loading a Ribbon

i Series Printers require the use of *i* Series ribbons for full color printing. The Resin Thermal Transfer and Dye Sublimination ribbons for P330*i* are specifically designed for your P330*i* Printer.

1. Place the printer power switch in the OFF (0) position.
2. If the printer’s Main Cover is closed:
   a. Open the printer’s Main Cover; lift it by the lip at the bottom front as shown in the figure below left.

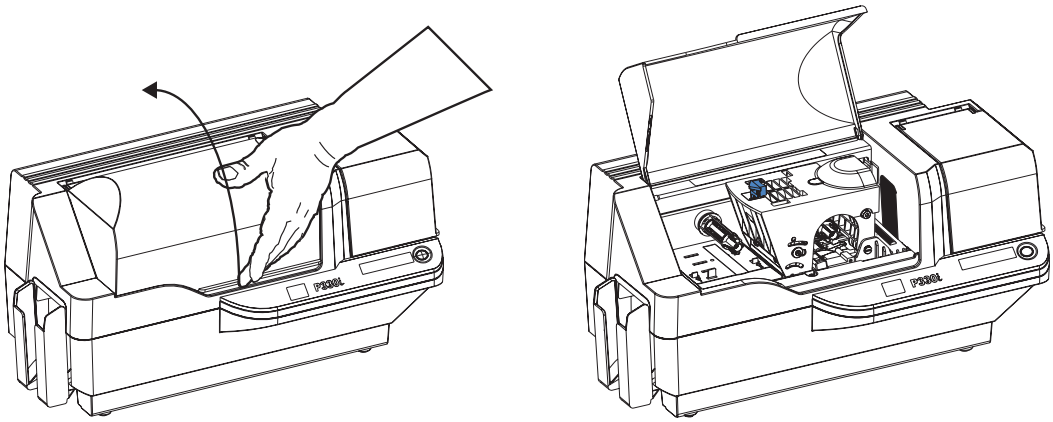

Electrostatic Discharge Caution • DO NOT TOUCH the Print Head or the electronic components on the Print Head Carriage. Discharges of electro-static energy that accumulate on the human body or other surfaces can damage the Print Head or other electronic components used in the printer.

Note • Avoid any direct contact with the print head to prevent transfer of oils or contamination. Outside of normal operation, only the Zebra-approved cleaning materials should come in contact with the print head.

   b. Raise the Print Head Carriage by pressing the release latch to the left (toward the output hopper) and lifting as shown below to about a 45° angle. The Print Head Carriage will stay in that position, as shown at the right below.

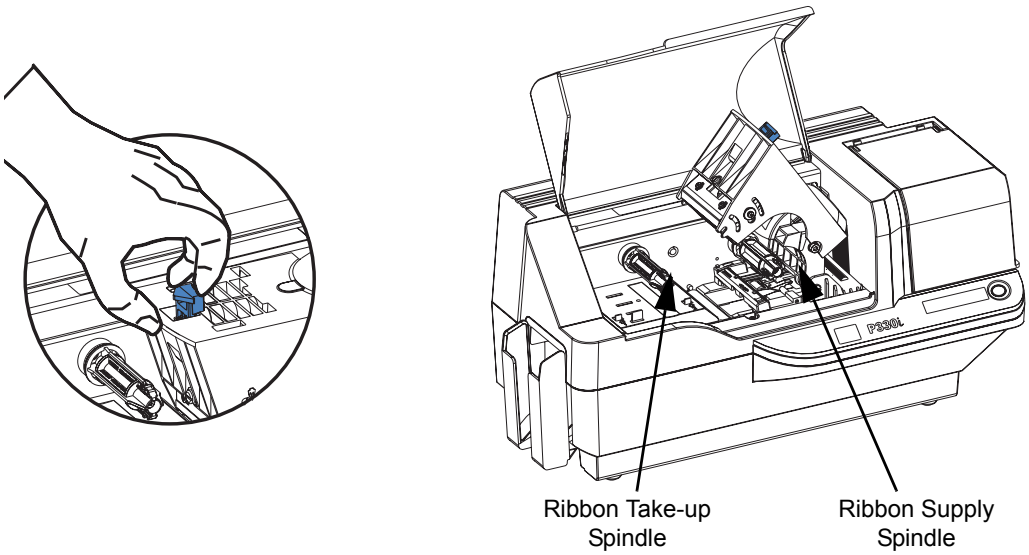

3. Locate the Ribbon Supply Spindle and the Ribbon Take-up Spindle (see above). Load ribbon onto the supply spindle (under the print head carriage) **flange side in**, and load the empty core (with tape attached) onto the take-up spindle. Make sure the ribbon comes off the top of the supply spindle and feeds to the top of the take-up spindle.

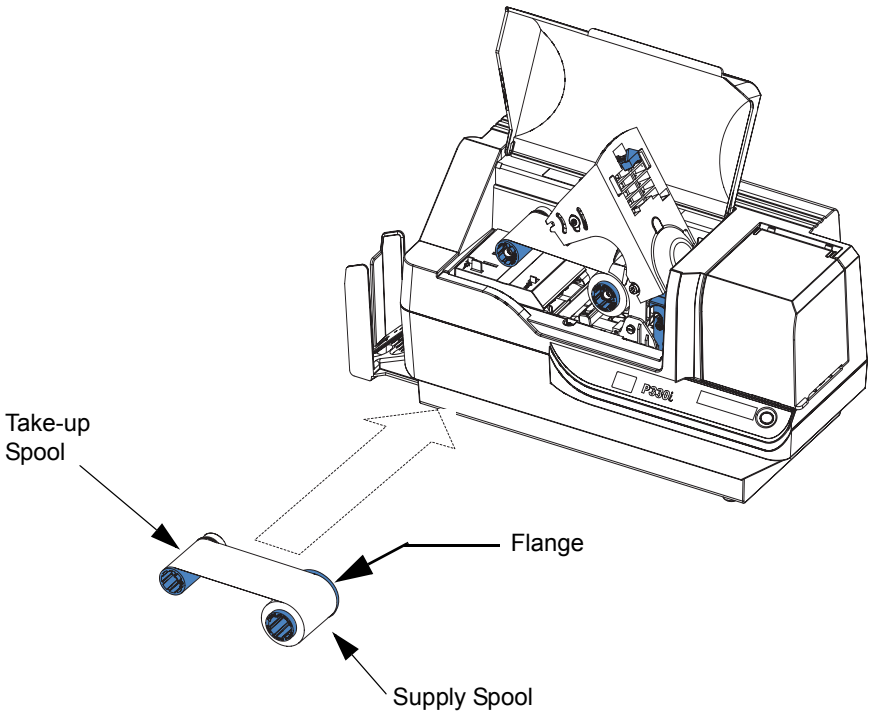

Caution • Do not touch the print head if the printer has been in service within the last 10 minutes. It could be very hot and cause a burn.

Electrostatic Discharge Caution • A static discharge is possible if you touch any exposed metal parts. Use of an anti-static wrist strap or comparable anti-static protection is required.

4. Gently press the print head carriage down until it is fully lowered, as shown below. Very little force is neccessary to perform this step.

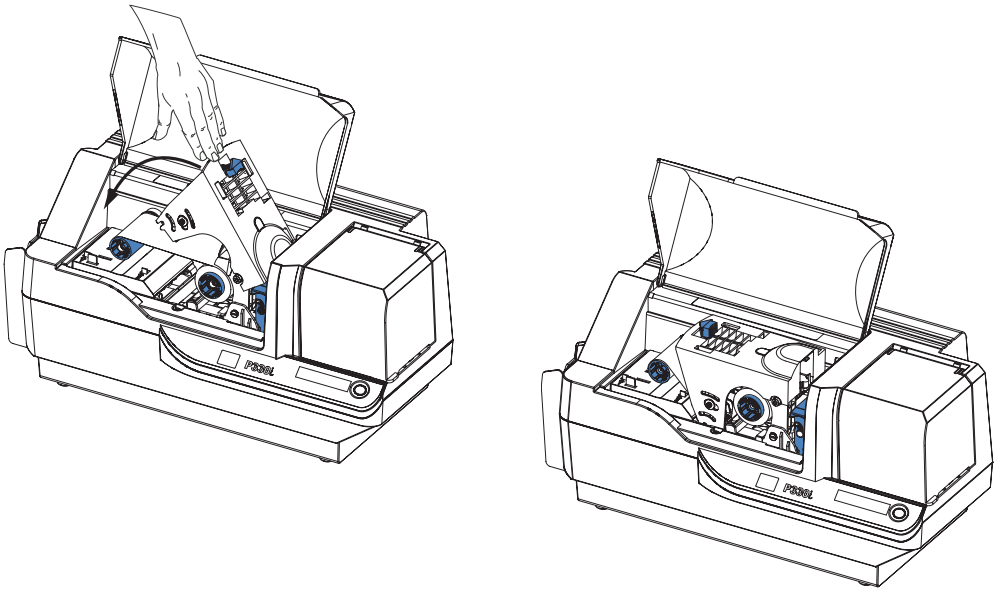

Note • During normal operation (with power connected and turned on), the ribbon would automatically synchronize when the Print Head is restored to its fully-down position. The ribbon would be identified and the corresponding parameters sent to the driver.

Since power is not connected at this point in the Installation and Setup Procedure, nothing will happen when the Print Head Carriage is closed. The ribbon will synchronize when power is turned on.

Installing the Card Cleaning Cartridge

The Card Cleaning Cartridge cleans the cards entering the printer. The Card Cleaning Cartridge consists of a Cartridge Frame and an Adhesive Roller, which are packed together.

1. Remove the Cartridge Frame and the Adhesive Roller from their packaging. Insert the Adhesive Roller into the Cartridge Frame, as shown below. To avoid contamination, always hold the frame and the roller by the ends.

.

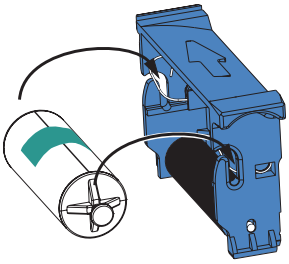

2. Peel the protective wrapper from the Adhesive Roller.

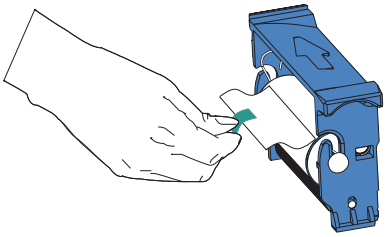

3. If the printer's main cover is closed, open it. Locate the area where the Card Cleaning Cartridge will be installed (initially, this area was covered by a warning tape).

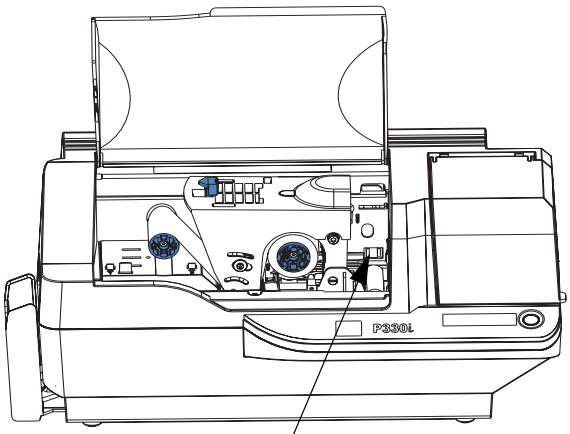

Card Cleaning Cartridge Mounting Location

4. Locate the slot at the rear of the Card Cleaning Cartridge mounting location; see below.

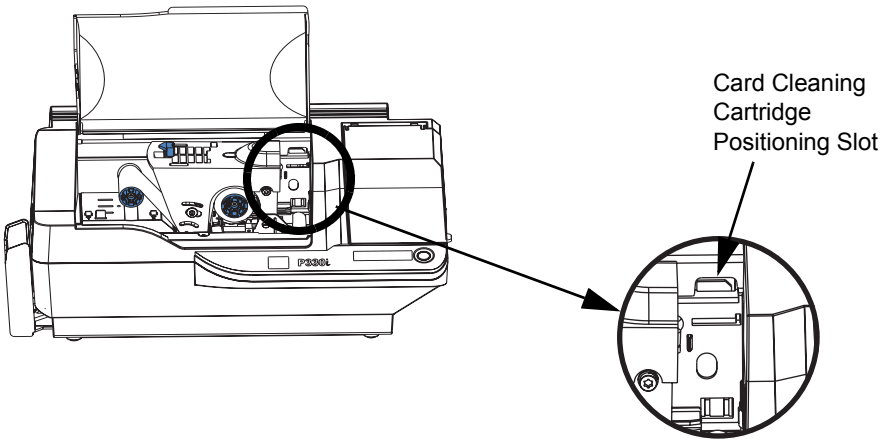

5. Hold the Card Cleaning Cartridge by the extended “handle” (so the large arrow on the top is pointing away from you). With the cartridge at about a 30° angle (pointing downward), insert the lip of the cartridge into the slot, until the cartridge seats against the back wall. Then press the front of the cartridge down until it seats all the way down and latches with an audible “click”. See below.

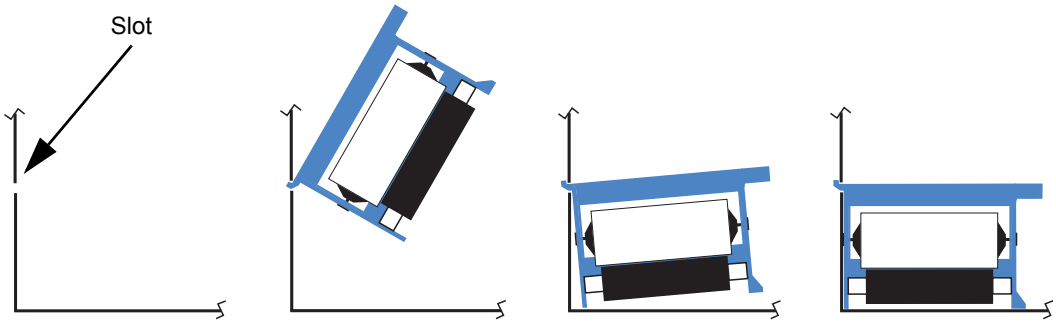

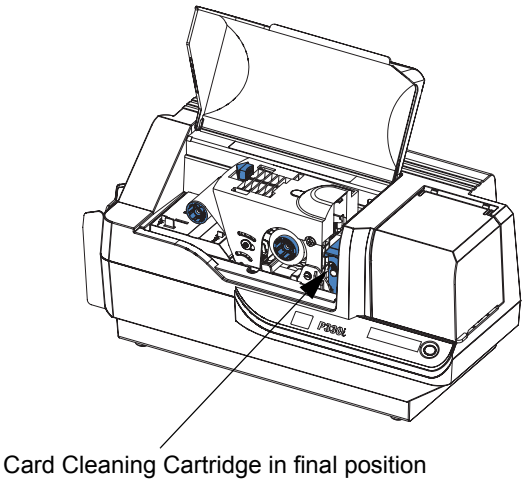

6. Close the printer’s Main Cover.

Setting the Card Thickness Control

The Card Thickness Control is set by the user to adjust the gap as cards enter the printer, to prevent double-feeds (which could cause a jam) or mis-feeds.

Note • Set the Card Thickness Control before loading cards.

1. Open the Card Feeder cover. The cover is hinged; lift it by the lip at the right front corner.

Note • To reduce contamination and ensure better print quality, minimize the time the Card Feeder cover is open.

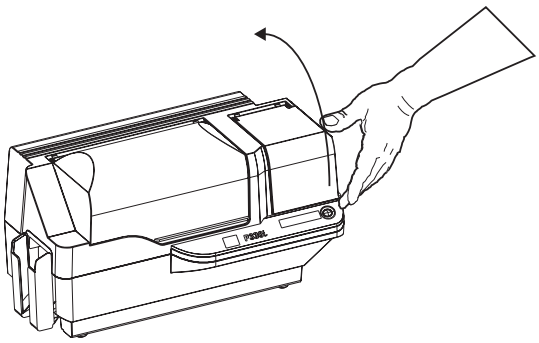

2. The Card Thickness Control Lever is at the front of the left-side opening of the Card Feeder area.

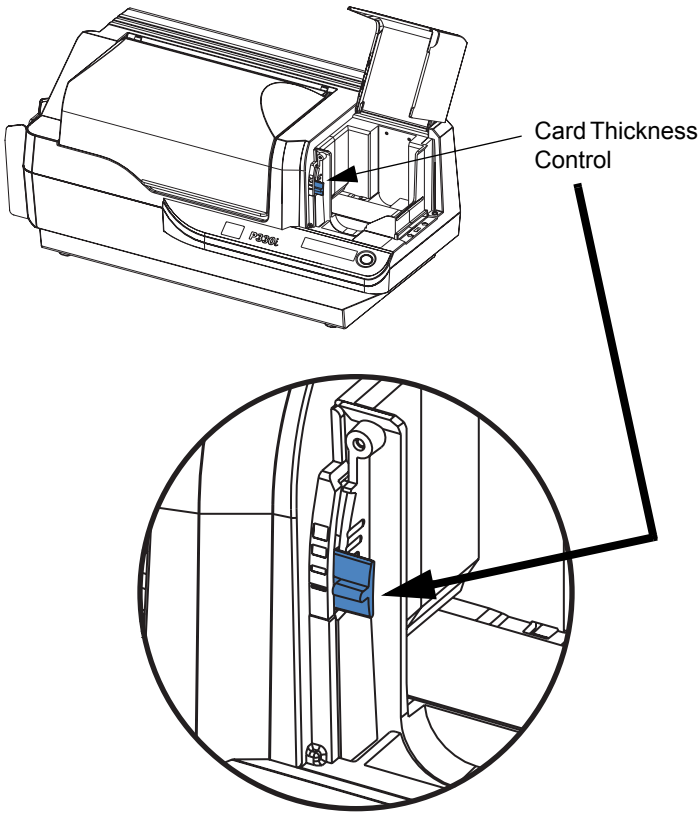

3. There are four detents to set the position of the Card Thickness Control. Slide the Card Thickness Control to the position corresponding to the following:

Detent Position	Card Thickness
Highest	50 mil (1.27 mm) to 60 mil (1.52 mm)
3rd position	30 mil (0.76 mm) to 50 mil (1.27 mm)
2nd position	20 mil (0.51 mm) to 40 mil (1.02 mm)
Lowest	10 mil (0.25 mm) to 20 mil (0.51 mm)

Note • The overlap in settings above accomodates variations in environmental conditions (especially humidity) and cards from different manufacturers. In general, start at the lowest position and move the lever up until cards feed reliably.

Note • “60 mil” (“1.524 mm”) cards may have a significant variation (over 10%) in the actual thickness of the cards; do not use these cards unless each card has been measured to have a thickness less than 66 mil (1.676 mm).

Loading Cards

This section shows how to load plastic cards into the P330*i* Printer. The P330*i* can use cards with a range of thickness from 10 mil (0.25 mm) to 60 mil (1.5 mm).

Note • Do not mix cards of different thicknesses!

The P330*i* Printer can also load and print cards fed individually. Information on this is given in the next chapter.

Note • DO NOT bend cards or touch print surfaces as this can reduce print quality. The surface of the cards must remain clean and dust free. Always store cards in an enclosed container. Ideally, use cards as soon as possible.

Note • For cards with magnetic stripe, refer to Appendix A for loading instructions.

The plastic cards generally come in decks of 100 cards; the Card Feeder can hold a full deck of 100 30-mil cards. Cards sometimes will stick together; this can cause mis-feeding or double-feeding. To avoid this, separate the cards before loading, as described in steps 2 through 4 below.

1. If the Card Feeder cover is closed, open it. The cover is hinged; lift it by the lip at the right front corner.
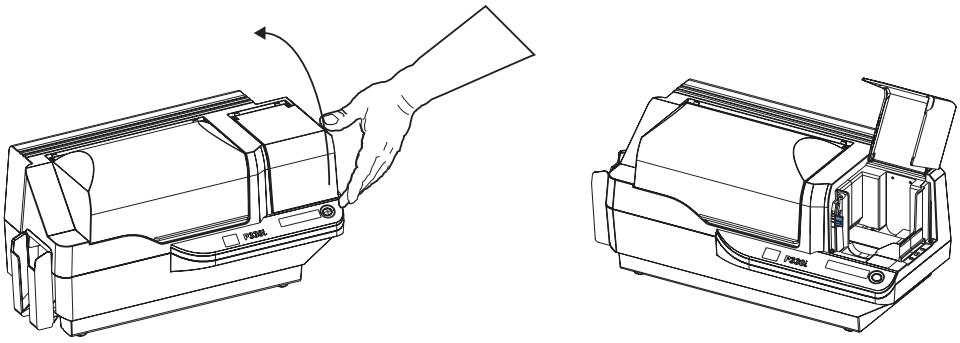
Note • To reduce contamination and ensure better print quality, minimize the time the Card Feeder cover is open.