System Check_Head_2450MHz

DUT: D2450V2-736

Communication System: CW; Frequency: 2450 MHz;Duty Cycle: 1:1
Medium: HSL_2450_230710 Medium parameters used : f = 2450 MHz; σ = 1.79 S/m; ε_r = 39.922; ρ = 1000 kg/m^3
Ambient Temperature：23.3 ℃; Liquid Temperature：22.3 ℃

DASY5 Configuration:
- Probe: EX3DV4 - SN3728;ConvF(7.47, 7.47, 7.47) @ 2450 MHz;Calibrated: 2023/3/22
- Sensor-Surface: 1.4mm (Mechanical Surface Detection)
- Electronics: DAE4 Sn1512; Calibrated: 2023/3/20
- Phantom: ELI v4.0_Mid; Type: QDOVA001AA; Serial: TP:1026
- Measurement SW: DASY52, Version 52.10 (4);SEMCAD X Version 14.6.14 (7483)

Pin=50mW/Area Scan (71x71x1): Interpolated grid: dx=1.200 mm, dy=1.200 mm
Maximum value of SAR (interpolated) = 4.38 W/kg

Pin=50mW/Zoom Scan (7x7x7)/Cube 0: Measurement grid: dx=5mm, dy=5mm, dz=5mm
Reference Value = 46.99 V/m; Power Drift = -0.06 dB
Peak SAR (extrapolated) = 5.36 W/kg
SAR(1 g) = 2.54 W/kg; SAR(10 g) = 1.18 W/kg
Maximum value of SAR (measured) = 4.29 W/kg

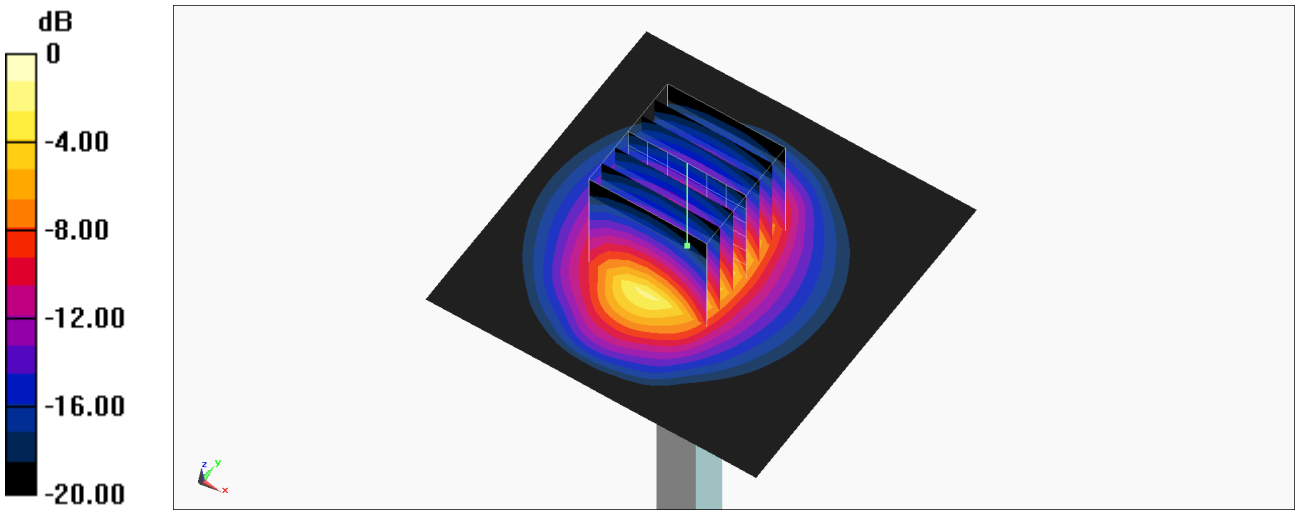

0 dB = 4.29 W/kg = 6.32 dBW/kg

System Check_Head_2450MHz

DUT: D2450V2-736

Communication System: CW; Frequency: 2450 MHz;Duty Cycle: 1:1
Medium: HSL_2450_230713 Medium parameters used : f = 2450 MHz; σ = 1.775 S/m; ε_r = 39.806; ρ = 1000 kg/m^3
Ambient Temperature：23.2 ℃; Liquid Temperature：22.2 ℃

DASY5 Configuration:
- Probe: EX3DV4 - SN3728;ConvF(7.47, 7.47, 7.47) @ 2450 MHz;Calibrated: 2023/3/22
- Sensor-Surface: 1.4mm (Mechanical Surface Detection)
- Electronics: DAE4 Sn1512; Calibrated: 2023/3/20
- Phantom: ELI v4.0_Mid; Type: QDOVA001AA; Serial: TP:1026
- Measurement SW: DASY52, Version 52.10 (4);SEMCAD X Version 14.6.14 (7483)

Pin=50mW/Area Scan (71x71x1): Interpolated grid: dx=1.200 mm, dy=1.200 mm
Maximum value of SAR (interpolated) = 4.34 W/kg

Pin=50mW/Zoom Scan (7x7x7)/Cube 0: Measurement grid: dx=5mm, dy=5mm, dz=5mm
Reference Value = 46.99 V/m; Power Drift = -0.02 dB
Peak SAR (extrapolated) = 5.31 W/kg
SAR(1 g) = 2.52 W/kg; SAR(10 g) = 1.17 W/kg
Maximum value of SAR (measured) = 4.26 W/kg

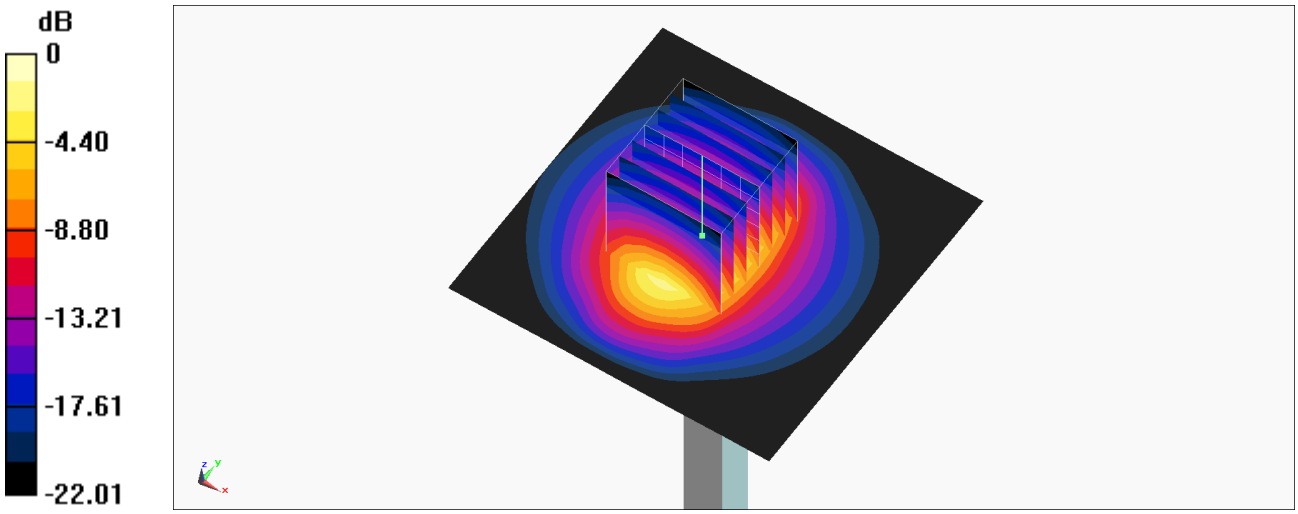

0 dB = 4.26 W/kg = 6.29 dBW/kg

System Check_Head_2450MHz

DUT: D2450V2-736

Communication System: CW; Frequency: 2450 MHz;Duty Cycle: 1:1
Medium: HSL_2450_230728 Medium parameters used : f = 2450 MHz; σ = 1.822 S/m; ε_r = 40.147; ρ = 1000 kg/m^3
Ambient Temperature：23.4 ℃; Liquid Temperature：22.4 ℃

DASY5 Configuration:
- Probe: EX3DV4 - SN3728;ConvF(7.47, 7.47, 7.47) @ 2450 MHz;Calibrated: 2023/3/22
- Sensor-Surface: 1.4mm (Mechanical Surface Detection)
- Electronics: DAE4 Sn1512; Calibrated: 2023/3/20
- Phantom: ELI v4.0_Mid; Type: QDOVA001AA; Serial: TP:1026
- Measurement SW: DASY52, Version 52.10 (4);SEMCAD X Version 14.6.14 (7483)

Pin=50mW/Area Scan (71x71x1): Interpolated grid: dx=1.200 mm, dy=1.200 mm
Maximum value of SAR (interpolated) = 4.46 W/kg

Pin=50mW/Zoom Scan (7x7x7)/Cube 0: Measurement grid: dx=5mm, dy=5mm, dz=5mm
Reference Value = 46.99 V/m; Power Drift = -0.06 dB
Peak SAR (extrapolated) = 5.45 W/kg
SAR(1 g) = 2.59 W/kg; SAR(10 g) = 1.2 W/kg
Maximum value of SAR (measured) = 4.37 W/kg

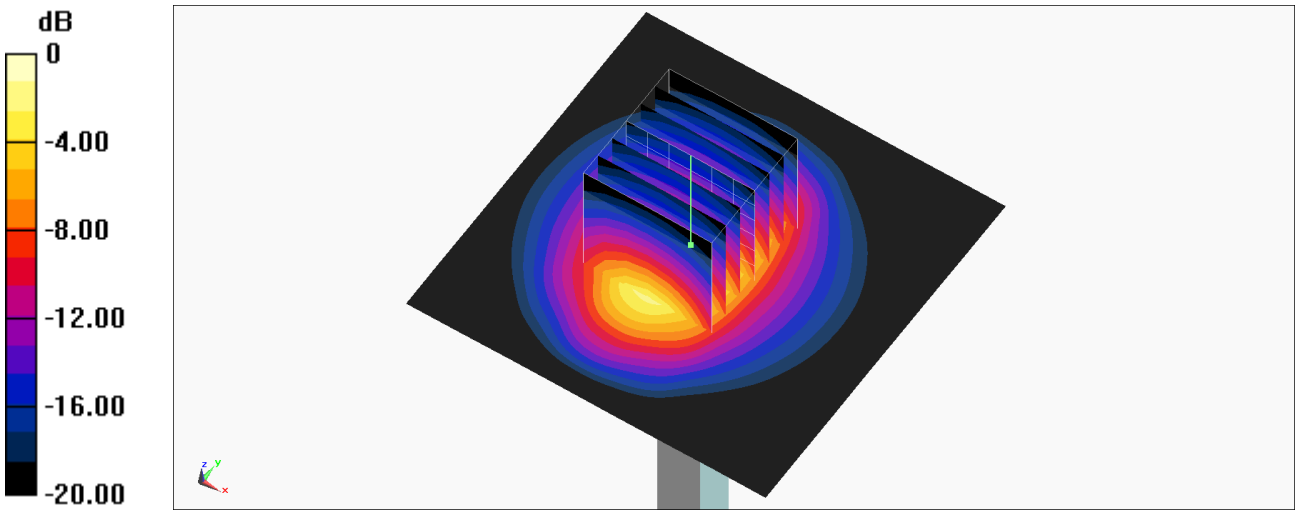

0 dB = 4.37 W/kg = 6.40 dBW/kg

System Check_Head_5250MHz

DUT: D5GHzV2-1171

Communication System: CW; Frequency: 5250 MHz;Duty Cycle: 1:1
Medium: HSL_5G_230711 Medium parameters used : f = 5250 MHz; σ = 4.878 S/m; ε_r = 36.37; ρ = 1000 kg/m^3
Ambient Temperature：23.2 ℃; Liquid Temperature：22.2 ℃

DASY5 Configuration:
- Probe: EX3DV4 - SN3728;ConvF(5.23, 5.23, 5.23) @ 5250 MHz;Calibrated: 2023/3/22
- Sensor-Surface: 1.4mm (Mechanical Surface Detection)
- Electronics: DAE4 Sn1512; Calibrated: 2023/3/20
- Phantom: ELI v4.0_Mid; Type: QDOVA001AA; Serial: TP:1026
- Measurement SW: DASY52, Version 52.10 (4);SEMCAD X Version 14.6.14 (7483)

Pin=100mW/Area Scan (71x71x1): Interpolated grid: dx=1.000 mm, dy=1.000 mm
Maximum value of SAR (interpolated) = 17.3 W/kg

Pin=100mW/Zoom Scan (9x9x7)/Cube 0: Measurement grid: dx=4mm, dy=4mm, dz=1.4mm
Reference Value = 68.18 V/m; Power Drift = -0.05 dB
Peak SAR (extrapolated) = 28.7 W/kg
SAR(1 g) = 7.8 W/kg; SAR(10 g) = 2.27 W/kg
Maximum value of SAR (measured) = 18.7 W/kg

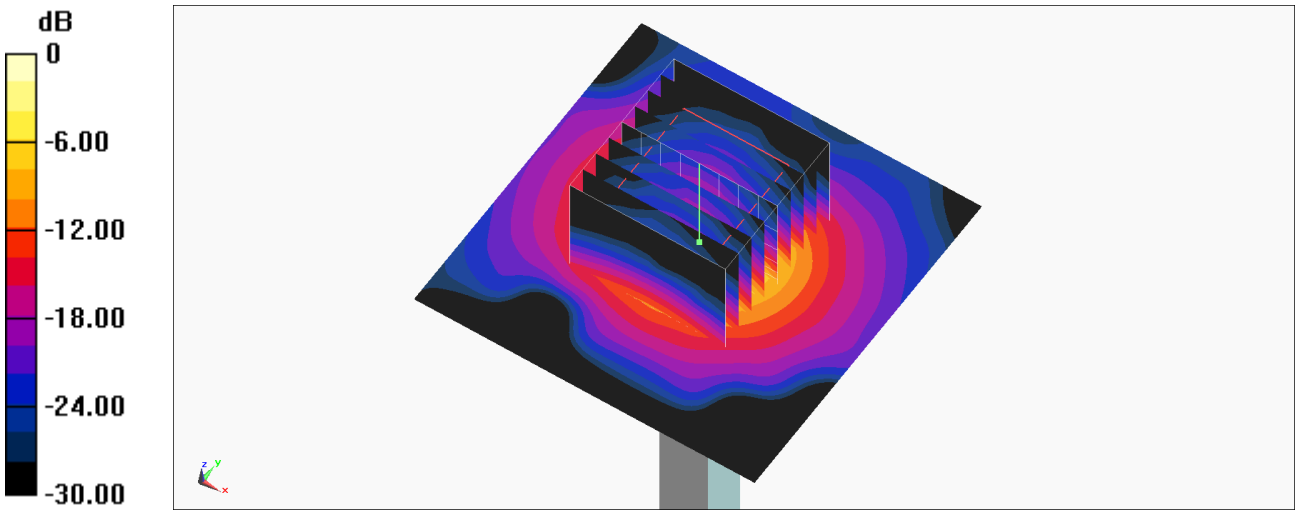

0 dB = 18.7 W/kg = 12.72 dBW/kg

System Check_Head_5250MHz

DUT: D5GHzV2-1128

Communication System: CW; Frequency: 5250 MHz;Duty Cycle: 1:1
Medium: HSL_5G_230712 Medium parameters used : f = 5250 MHz; σ = 4.635 S/m; ε_r = 35.997; ρ = 1000 kg/m^3
Ambient Temperature：23.2 ℃; Liquid Temperature：22.2 ℃

DASY5 Configuration:
- Probe: EX3DV4 - SN3728;ConvF(5.23, 5.23, 5.23) @ 5250 MHz;Calibrated: 2023/3/22
- Sensor-Surface: 1.4mm (Mechanical Surface Detection)
- Electronics: DAE4 Sn1512; Calibrated: 2023/3/20
- Phantom: ELI v4.0_Mid; Type: QDOVA001AA; Serial: TP:1026
- Measurement SW: DASY52, Version 52.10 (4);SEMCAD X Version 14.6.14 (7483)

Pin=50mW/Area Scan (71x71x1): Interpolated grid: dx=1.000 mm, dy=1.000 mm
Maximum value of SAR (interpolated) = 8.74 W/kg

Pin=50mW/Zoom Scan (9x9x7)/Cube 0: Measurement grid: dx=4mm, dy=4mm, dz=1.4mm
Reference Value = 48.44 V/m; Power Drift = -0.08 dB
Peak SAR (extrapolated) = 13.5 W/kg
SAR(1 g) = 3.66 W/kg; SAR(10 g) = 1.06 W/kg
Maximum value of SAR (measured) = 8.55 W/kg

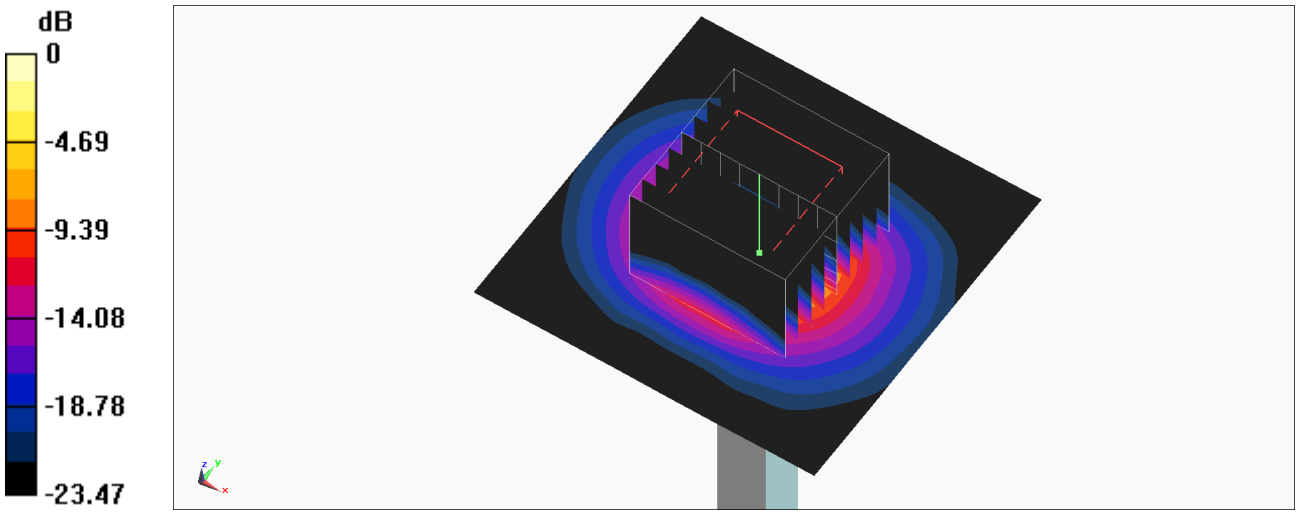

0 dB = 8.55 W/kg = 9.32 dBW/kg

System Check_Head_5250MHz

DUT: D5GHzV2-1171

Communication System: CW; Frequency: 5250 MHz;Duty Cycle: 1:1
Medium: HSL_5G_230714 Medium parameters used : f = 5250 MHz; σ = 4.834 S/m; ε_r = 36.04; ρ = 1000 kg/m^3
Ambient Temperature：23.3 ℃; Liquid Temperature：22.3 ℃

DASY5 Configuration:
- Probe: EX3DV4 - SN3728;ConvF(5.23, 5.23, 5.23) @ 5250 MHz;Calibrated: 2023/3/22
- Sensor-Surface: 1.4mm (Mechanical Surface Detection)
- Electronics: DAE4 Sn1512; Calibrated: 2023/3/20
- Phantom: ELI v4.0_Mid; Type: QDOVA001AA; Serial: TP:1026
- Measurement SW: DASY52, Version 52.10 (4);SEMCAD X Version 14.6.14 (7483)

Pin=50mW/Area Scan (71x71x1): Interpolated grid: dx=1.000 mm, dy=1.000 mm
Maximum value of SAR (interpolated) = 9.12 W/kg

Pin=50mW/Zoom Scan (9x9x7)/Cube 0: Measurement grid: dx=4mm, dy=4mm, dz=1.4mm
Reference Value = 48.44 V/m; Power Drift = 0.07 dB
Peak SAR (extrapolated) = 14.1 W/kg
SAR(1 g) = 3.69 W/kg; SAR(10 g) = 1.05 W/kg
Maximum value of SAR (measured) = 8.92 W/kg

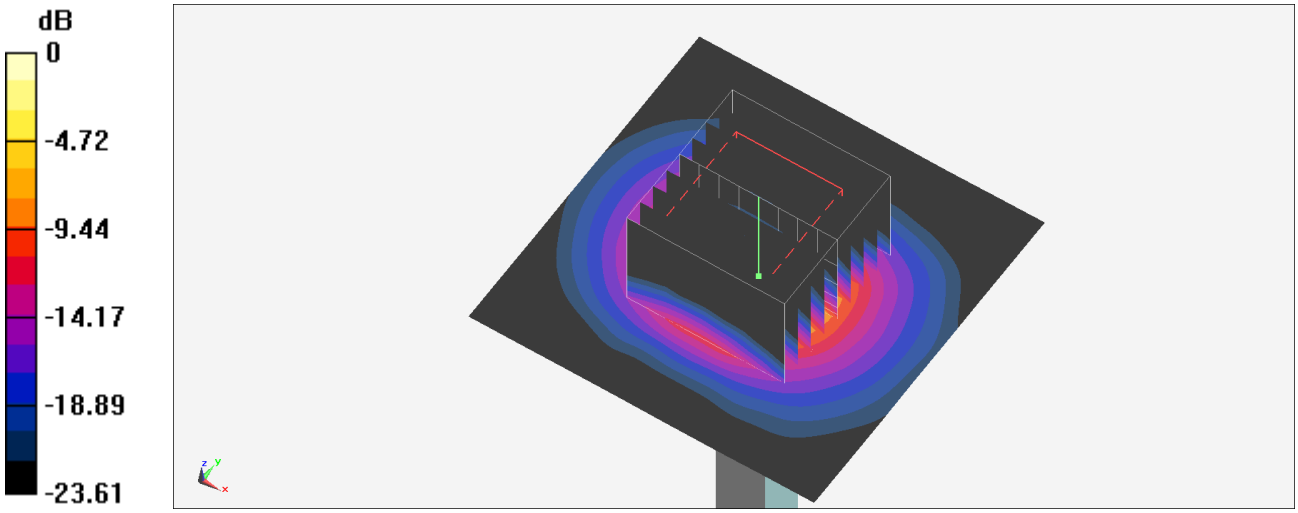

0 dB = 8.92 W/kg = 9.50 dBW/kg

System Check_Head_5600MHz

DUT: D5GHzV2-1171

Communication System: CW; Frequency: 5600 MHz;Duty Cycle: 1:1
Medium: HSL_5G_230711 Medium parameters used: f = 5600 MHz; σ = 5.144 S/m; ε_r = 35.765; ρ = 1000 kg/m^3
Ambient Temperature：23.2 ℃; Liquid Temperature：22.2 ℃

DASY5 Configuration:
- Probe: EX3DV4 - SN3728;ConvF(4.58, 4.58, 4.58) @ 5600 MHz;Calibrated: 2023/3/22
- Sensor-Surface: 1.4mm (Mechanical Surface Detection)
- Electronics: DAE4 Sn1512; Calibrated: 2023/3/20
- Phantom: ELI v4.0_Mid; Type: QDOVA001AA; Serial: TP:1026
- Measurement SW: DASY52, Version 52.10 (4);SEMCAD X Version 14.6.14 (7483)

Pin=100mW/Area Scan (71x71x1): Interpolated grid: dx=1.000 mm, dy=1.000 mm
Maximum value of SAR (interpolated) = 19.7 W/kg

Pin=100mW/Zoom Scan (9x9x7)/Cube 0: Measurement grid: dx=4mm, dy=4mm, dz=1.4mm
Reference Value = 69.41 V/m; Power Drift = 0.04 dB
Peak SAR (extrapolated) = 33.5 W/kg
SAR(1 g) = 8.45 W/kg; SAR(10 g) = 2.44 W/kg
Maximum value of SAR (measured) = 21.1 W/kg

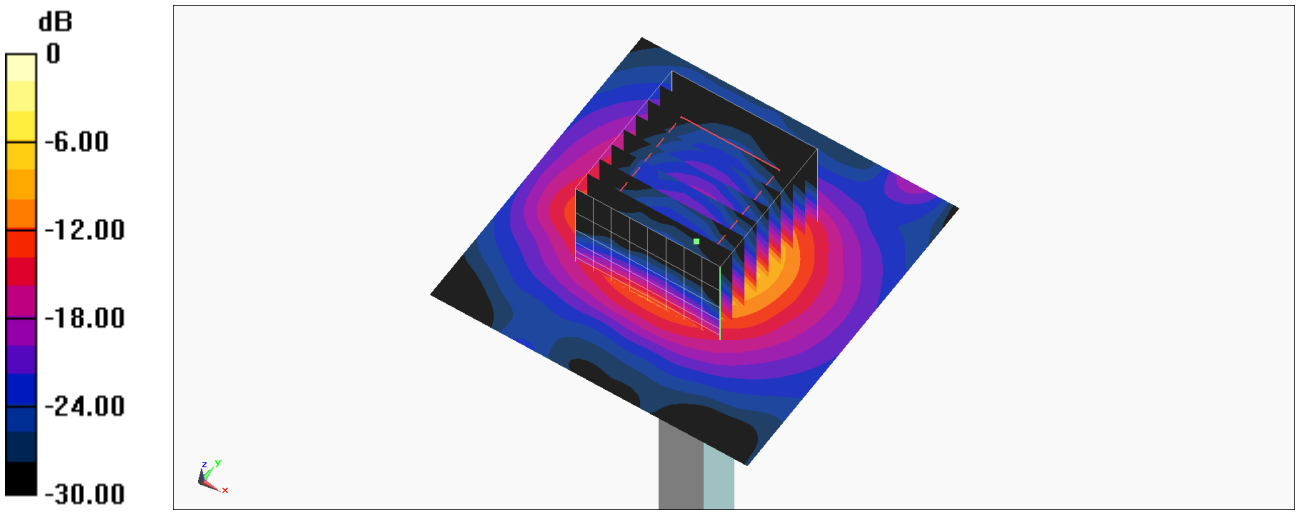

0 dB = 21.1 W/kg = 13.24 dBW/kg

System Check_Head_5600MHz

DUT: D5GHzV2-1128

Communication System: CW; Frequency: 5600 MHz;Duty Cycle: 1:1
Medium: HSL_5G_230712 Medium parameters used: f = 5600 MHz; σ = 4.957 S/m; ε_r = 35.482; ρ = 1000 kg/m^3
Ambient Temperature：23.2 ℃; Liquid Temperature：22.2 ℃

DASY5 Configuration:
- Probe: EX3DV4 - SN3728;ConvF(4.58, 4.58, 4.58) @ 5600 MHz;Calibrated: 2023/3/22
- Sensor-Surface: 1.4mm (Mechanical Surface Detection)
- Electronics: DAE4 Sn1512; Calibrated: 2023/3/20
- Phantom: ELI v4.0_Mid; Type: QDOVA001AA; Serial: TP:1026
- Measurement SW: DASY52, Version 52.10 (4);SEMCAD X Version 14.6.14 (7483)

Pin=50mW/Area Scan (71x71x1): Interpolated grid: dx=1.000 mm, dy=1.000 mm
Maximum value of SAR (interpolated) = 9.57 W/kg

Pin=50mW/Zoom Scan (7x7x7)/Cube 0: Measurement grid: dx=4mm, dy=4mm, dz=1.4mm
Reference Value = 43.34 V/m; Power Drift = 0.06 dB
Peak SAR (extrapolated) = 15.9 W/kg
SAR(1 g) = 3.67 W/kg; SAR(10 g) = 1.05 W/kg
Maximum value of SAR (measured) = 9.57 W/kg

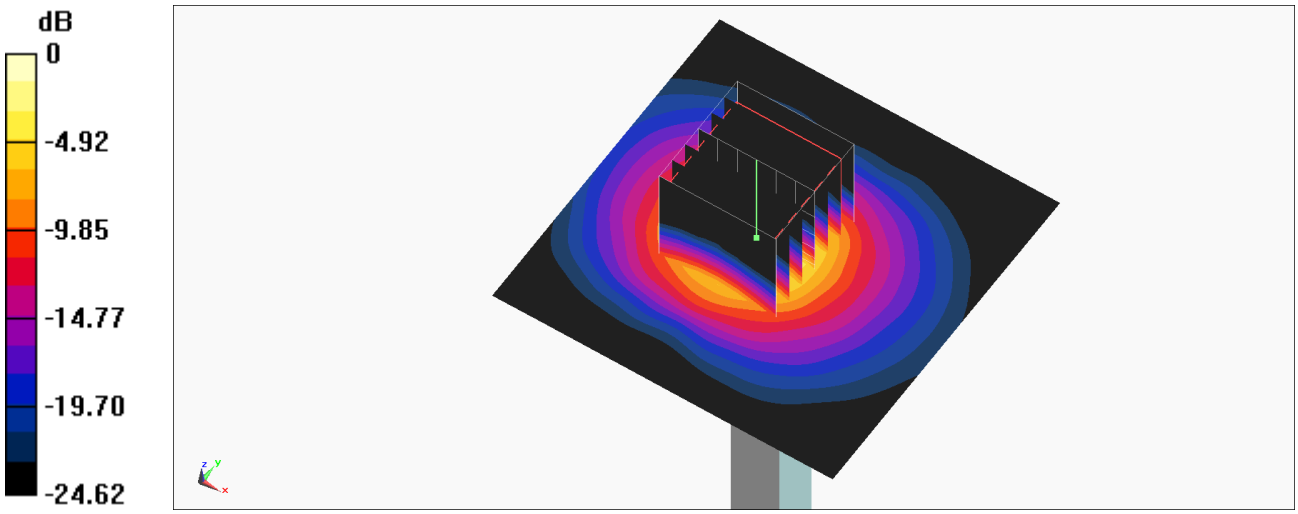

0 dB = 9.57 W/kg = 9.81 dBW/kg

System Check_Head_5600MHz

DUT: D5GHzV2-1171

Communication System: CW; Frequency: 5600 MHz;Duty Cycle: 1:1
Medium: HSL_5G_230714 Medium parameters used: f = 5600 MHz; σ = 5.097 S/m; ε_r = 35.435; ρ = 1000 kg/m^3
Ambient Temperature：23.3 ℃; Liquid Temperature：22.3 ℃

DASY5 Configuration:
- Probe: EX3DV4 - SN3728;ConvF(4.58, 4.58, 4.58) @ 5600 MHz;Calibrated: 2023/3/22
- Sensor-Surface: 1.4mm (Mechanical Surface Detection)
- Electronics: DAE4 Sn1512; Calibrated: 2023/3/20
- Phantom: ELI v4.0_Mid; Type: QDOVA001AA; Serial: TP:1026
- Measurement SW: DASY52, Version 52.10 (4);SEMCAD X Version 14.6.14 (7483)

Pin=50mW/Area Scan (71x71x1): Interpolated grid: dx=1.000 mm, dy=1.000 mm
Maximum value of SAR (interpolated) = 9.93 W/kg

Pin=50mW/Zoom Scan (7x7x7)/Cube 0: Measurement grid: dx=4mm, dy=4mm, dz=1.4mm
Reference Value = 50.10 V/m; Power Drift = -0.07 dB
Peak SAR (extrapolated) = 17.4 W/kg
SAR(1 g) = 3.96 W/kg; SAR(10 g) = 1.12 W/kg
Maximum value of SAR (measured) = 10.5 W/kg

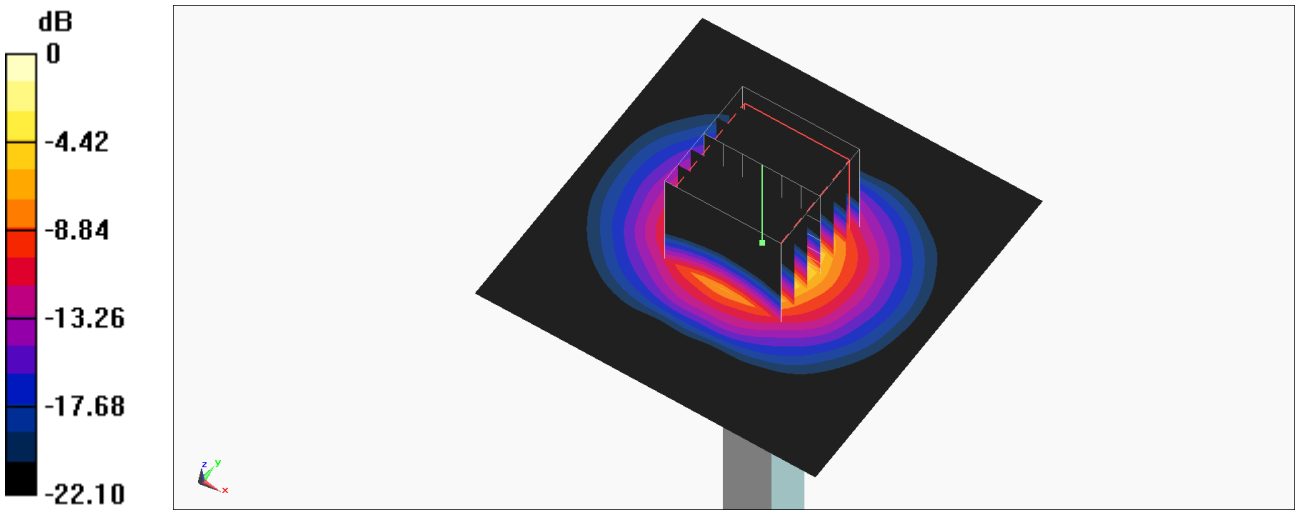

0 dB = 10.5 W/kg = 10.21 dBW/kg

System Check_Head_5750MHz

DUT: D5GHzV2-1171

Communication System: CW; Frequency: 5750 MHz;Duty Cycle: 1:1
Medium: HSL_5G_230711 Medium parameters used: f = 5750 MHz; σ = 5.369 S/m; ε_r = 35.447; ρ = 1000 kg/m^3
Ambient Temperature：23.2 ℃; Liquid Temperature：22.2 ℃

DASY5 Configuration:
- Probe: EX3DV4 - SN3728;ConvF(4.72, 4.72, 4.72) @ 5750 MHz;Calibrated: 2023/3/22
- Sensor-Surface: 1.4mm (Mechanical Surface Detection)
- Electronics: DAE4 Sn1512; Calibrated: 2023/3/20
- Phantom: ELI v4.0_Mid; Type: QDOVA001AA; Serial: TP:1026
- Measurement SW: DASY52, Version 52.10 (4);SEMCAD X Version 14.6.14 (7483)

Pin=50mW/Area Scan (71x71x1): Interpolated grid: dx=1.000 mm, dy=1.000 mm
Maximum value of SAR (interpolated) = 10.1 W/kg

Pin=50mW/Zoom Scan (9x9x7)/Cube 0: Measurement grid: dx=4mm, dy=4mm, dz=1.4mm
Reference Value = 42.95 V/m; Power Drift = -0.06 dB
Peak SAR (extrapolated) = 16.4 W/kg
SAR(1 g) = 3.73 W/kg; SAR(10 g) = 1.07 W/kg
Maximum value of SAR (measured) = 9.71 W/kg

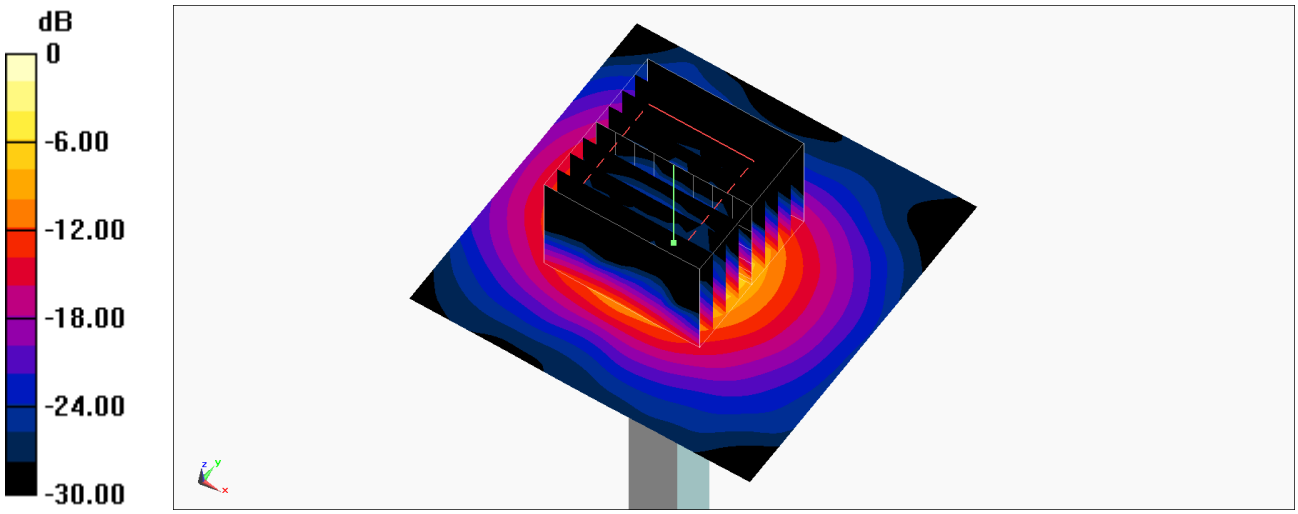

0 dB = 9.71 W/kg = 9.87 dBW/kg

System Check_Head_5750MHz

DUT: D5GHzV2-1128

Communication System: CW; Frequency: 5750 MHz;Duty Cycle: 1:1
Medium: HSL_5G_230712 Medium parameters used: f = 5750 MHz; σ = 5.128 S/m; ε_r = 35.221; ρ = 1000 kg/m^3
Ambient Temperature：23.2 ℃; Liquid Temperature：22.2 ℃

DASY5 Configuration:
- Probe: EX3DV4 - SN3728;ConvF(4.72, 4.72, 4.72) @ 5750 MHz;Calibrated: 2023/3/22
- Sensor-Surface: 1.4mm (Mechanical Surface Detection)
- Electronics: DAE4 Sn1512; Calibrated: 2023/3/20
- Phantom: ELI v4.0_Mid; Type: QDOVA001AA; Serial: TP:1026
- Measurement SW: DASY52, Version 52.10 (4);SEMCAD X Version 14.6.14 (7483)

Pin=50mW/Area Scan (71x71x1): Interpolated grid: dx=1.000 mm, dy=1.000 mm
Maximum value of SAR (interpolated) = 9.66 W/kg

Pin=50mW/Zoom Scan (9x9x7)/Cube 0: Measurement grid: dx=4mm, dy=4mm, dz=1.4mm
Reference Value = 42.95 V/m; Power Drift = -0.06 dB
Peak SAR (extrapolated) = 15.7 W/kg
SAR(1 g) = 3.58 W/kg; SAR(10 g) = 1.04 W/kg
Maximum value of SAR (measured) = 9.27 W/kg

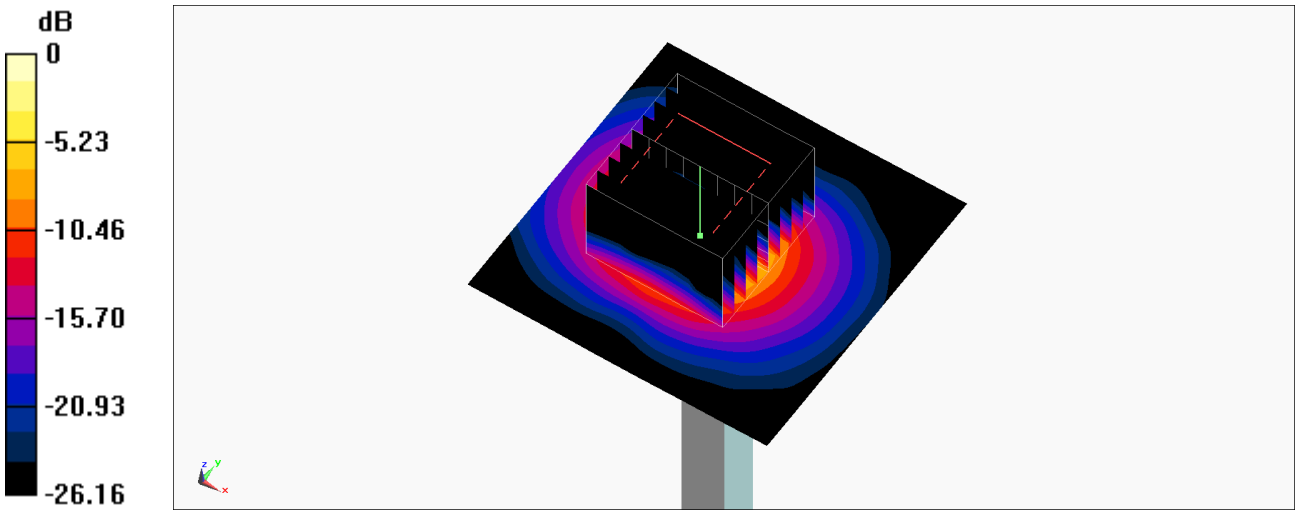

0 dB = 9.27 W/kg = 9.67 dBW/kg

System Check_Head_5750MHz

DUT: D5GHzV2-1171

Communication System: CW; Frequency: 5750 MHz;Duty Cycle: 1:1
Medium: HSL_5G_230714 Medium parameters used: f = 5750 MHz; σ = 5.321 S/m; ε_r = 35.117; ρ = 1000 kg/m^3
Ambient Temperature：23.3 ℃; Liquid Temperature：22.3 ℃

DASY5 Configuration:
- Probe: EX3DV4 - SN3728;ConvF(4.72, 4.72, 4.72) @ 5750 MHz;Calibrated: 2023/3/22
- Sensor-Surface: 1.4mm (Mechanical Surface Detection)
- Electronics: DAE4 Sn1512; Calibrated: 2023/3/20
- Phantom: ELI v4.0_Mid; Type: QDOVA001AA; Serial: TP:1026
- Measurement SW: DASY52, Version 52.10 (4);SEMCAD X Version 14.6.14 (7483)

Pin=50mW/Area Scan (71x71x1): Interpolated grid: dx=1.000 mm, dy=1.000 mm
Maximum value of SAR (interpolated) = 10.2 W/kg

Pin=50mW/Zoom Scan (7x7x7)/Cube 0: Measurement grid: dx=4mm, dy=4mm, dz=1.4mm
Reference Value = 43.17 V/m; Power Drift = 0.03 dB
Peak SAR (extrapolated) = 16.6 W/kg
SAR(1 g) = 3.73 W/kg; SAR(10 g) = 1.07 W/kg
Maximum value of SAR (measured) = 9.78 W/kg

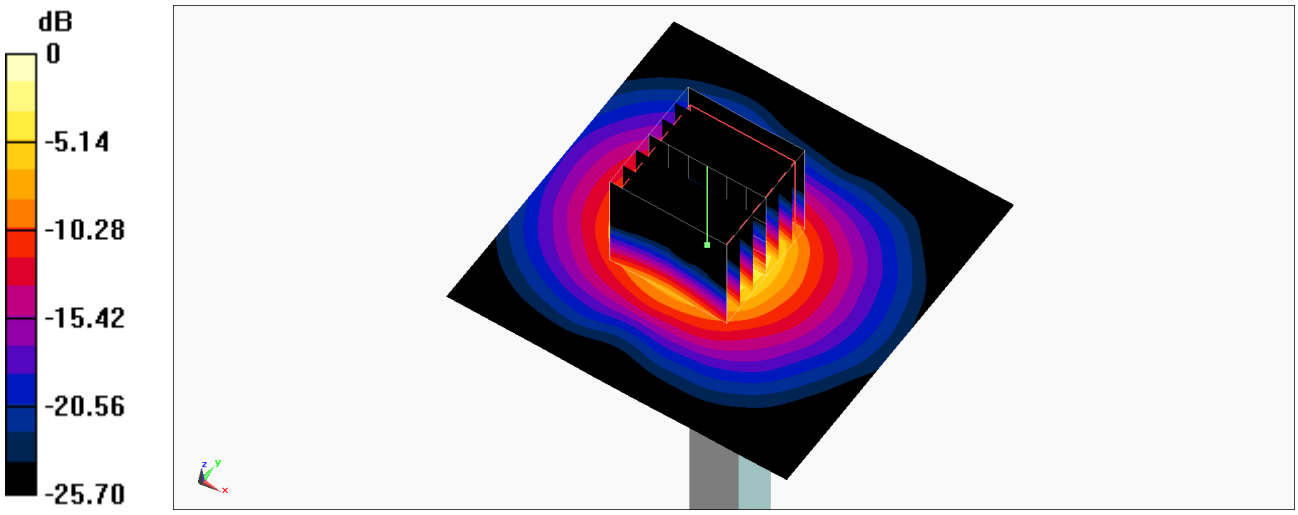

0 dB = 9.78 W/kg = 9.90 dBW/kg