HIGH-TEK HARNESS ENTERPRISE CO., LTD

Antenna Testing Report

CLEVO 888E

Prepared by Approved by

Charles Teng David Su

General Information

- *Measurement Resume*

Date	Engineer	2.4~2.5 GHz	5.15~5.35 GHz	5.47~5.725 GHz	5.725~5,825 GHz
92/04/30	Charles Teng	●			

- *Antenna specifications:* maximum size, unit: mm

PIFA Type	Length	Width	Height	Cable length
Right Side	39.0	5.7	4.8	460
Left Side				

- *Measurement Setup & Environment*

Temp.	Humidity	Instrument	System	Entry
20°C	50%	VNA HP8753ES, 7x4x4 m anechoic chamber	NSI antenna measurement system	VSWR, Return, Radiation pattern

Antenna Drawing

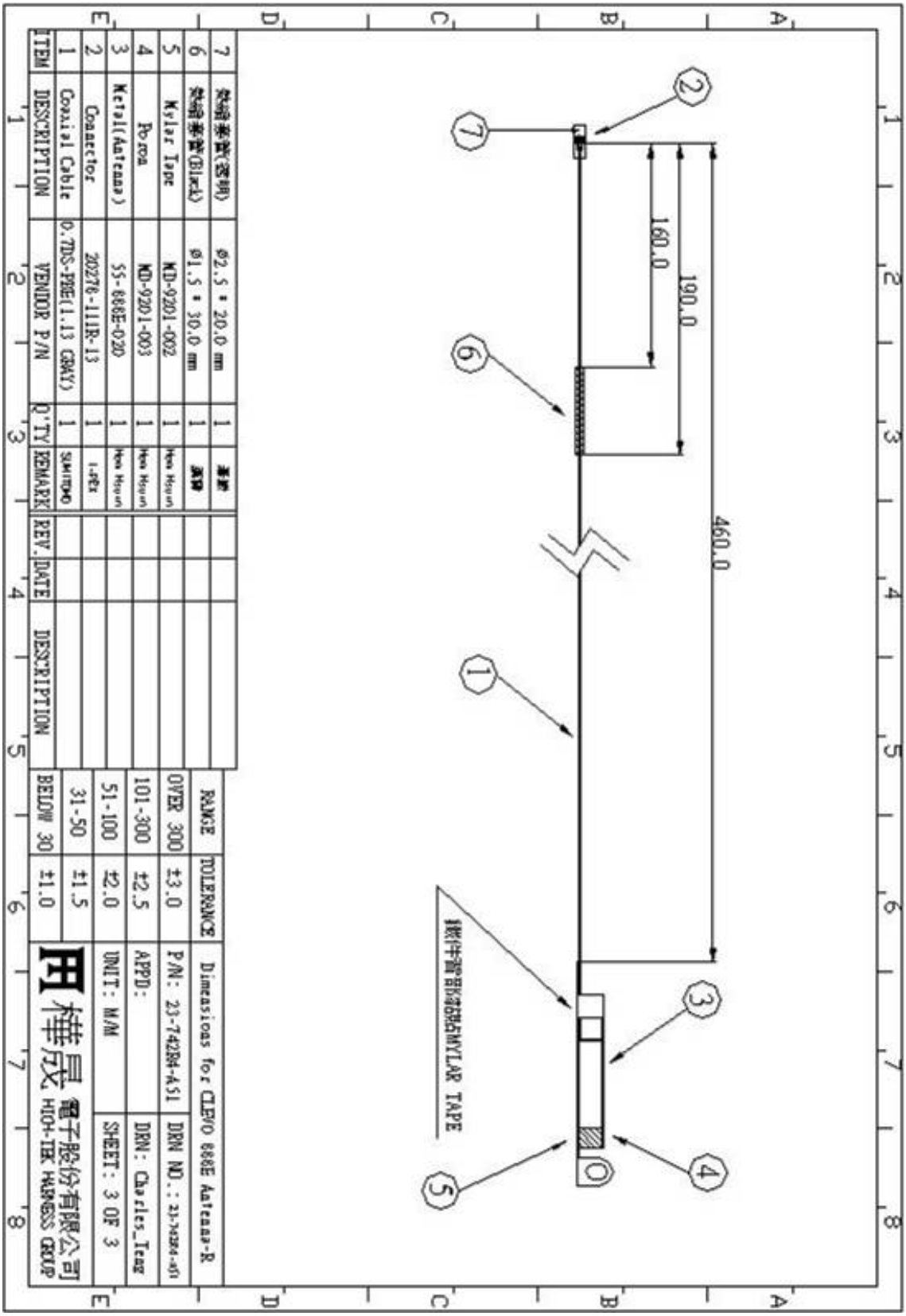

ITEM	DESCRIPTION	VENDOR P/N	Q'TY	REMARK	REV.	DATE	DESCRIPTION
7	熱縮套管(透明)	Ø2.5 * 20.0 mm	1	華晨			
6	熱縮套管(Black)	Ø1.5 * 30.0 mm	1	華晨			
5	Mylar Tape	MD-9201-002	1	Hon Hsun			
4	Porom	MD-9201-003	1	Hon Hsun			
3	Metal(Antenna)	SS-686E-020	1	Hon Hsun			
2	Connector	20276-111R-13	1	i-PEX			
1	Coaxial Cable	0.7DS-P8E(1.13 GRAY)	1	SUMITOMO			

RANGE	TOLERANCE
OVER 300	±3.0
101-300	±2.5
51-100	±2.0
31-50	±1.5
BELOW 30	±1.0

Spectrum Allocation in worldwide WLAN

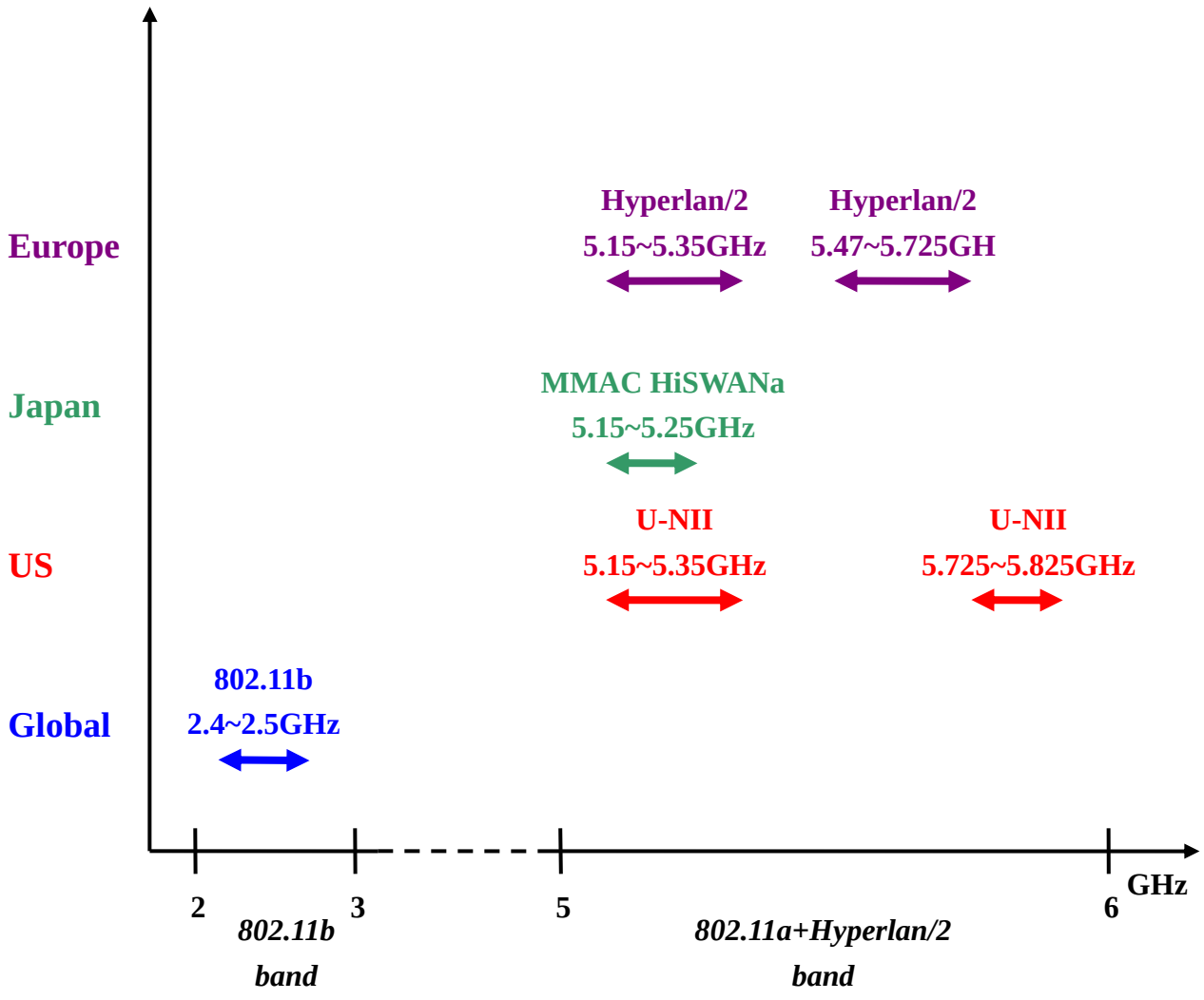

Typical Performance of Antenna

I. Typical Performance Table

	2.4~2.5GHz	5.15~5.25GHz	5.15~5.35GHz	5.47~5.825GHz
VSWR	**1.24**			
Peak Gain	**3.12 dBi**			
Average Gain	**-1.45 dBi**			

II. Antenna Type

Position	Main Antenna (Right-side Antenna)	Aux Antenna (Left-side Antenna)
Antenna Type	PIFA	PIFA
Material	Metal sheet	Metal sheet

III. VSWR

	2.4GHz ISM 2.4~2.5GHz			JAPAN 5.15~5.25GHz		U-NII,Hyperlan/2 5.150~5.35GHz			U-NII+HiperLAN/2 5.47~5.825GHz		
Freq (GHz)	2.40	2.45	2.50	5.15	5.25	5.15	5.25	5.35	5.47	5.6	5.825
MAIN	1.53	1.15	1.31								
AUX											

IV. Peak Gain and Average Gain

Gain (dBi) \ Freq (GHz)		2.4GHz ISM 2.4~2.5GHz			JAPAN 5.15~5.25GHz		U-NII,Hyperlan/2 5.150~5.350GHz			U-NII+HiperLAN/2 5.470~5.825GHz		
		2.40	2.45	2.50	5.15	5.25	5.15	5.25	5.35	5.47	5.6	5.825
MAIN	Peak	**2.21**	**3.12**	**2.66**								
	Avg	**-1.63**	**-1.45**	**-2.00**								
AUX	Peak											
	Avg											

Return Loss & VSWR

R-Antenna

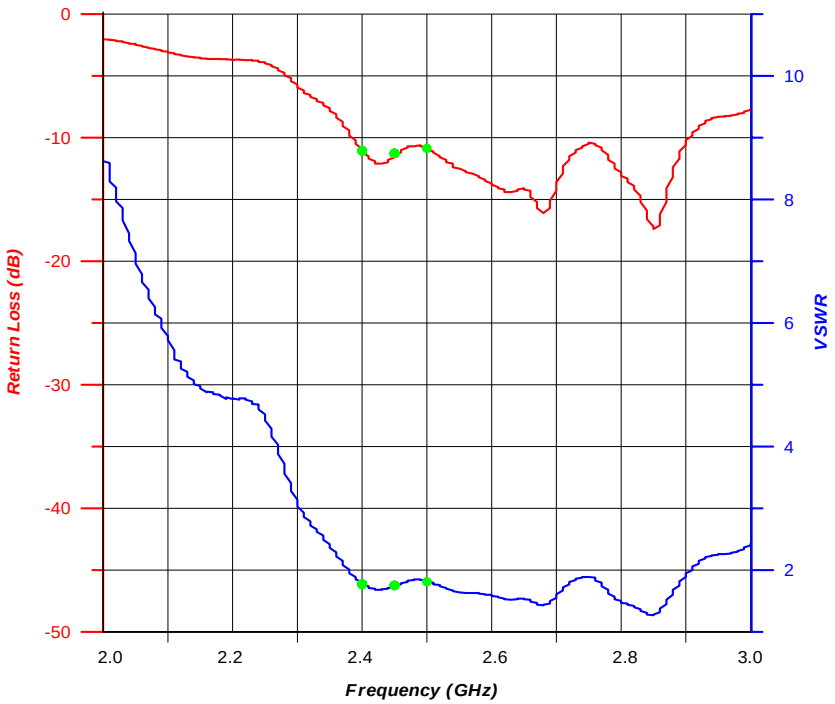

2.4~2.5 GHz Center freq. @MHz		2450
Beam Width @MHz		120
freq.	Return Loss(dB)	VSWR
2.4 GHz	-14.3	1.53
2.45 GHz	-20.4	1.15
2.5 GHz	-13.4	1.31

Radiation Pattern

antenna(2.4~2.5 GHz)

Note: horizontal polarization plots in the red line and vertical polarization in the blue one

Far-field amplitude of YZ-2.45 H&V

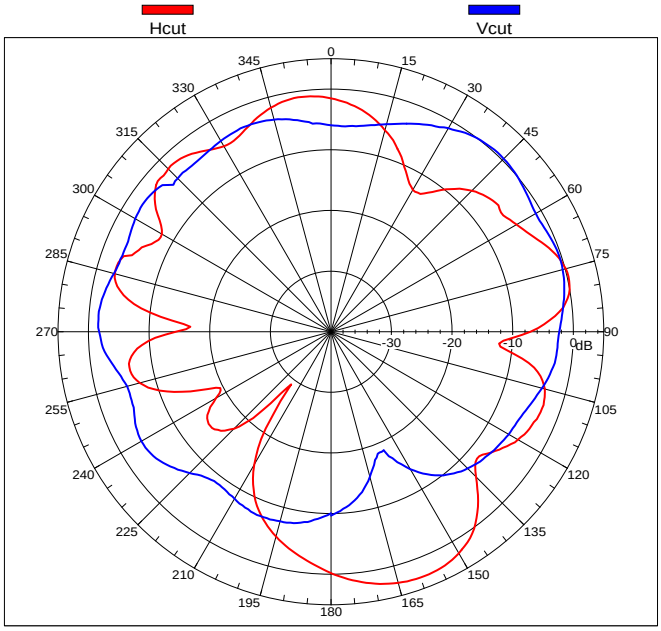

Average Gain And Peak Gain (On Azimuth Plane)

Y-Z Plane

Avg. Gain (dBi)	***-3.28***
Avg. Gain (dBi)	***-3.31***
Peak Gain (dBi)	***3.12***

Far-field amplitude of XZ-2.45 H&V

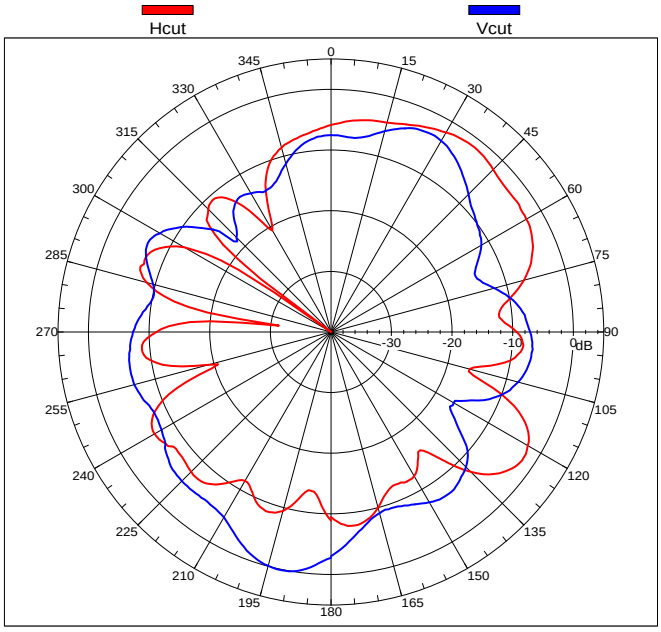

Average Gain And Peak Gain (On Azimuth Plane)

Z-X Plane

Avg. Gain (dBi)	***-6.50***
Avg. Gain (dBi)	***-6.54***
Peak Gain (dBi)	***0.09***

Appendix

VSWR : *Voltage standing wave ratio on a transmission line in an antenna system. The ratio of the forward to reflected voltage on the line, and not a power ratio. A VSWR of 1:1 occurs when all parts of the antenna system are matched correctly.*

Return Loss : *When the load is mismatched, then, not all of the available power from the generator is delivered to the load. This ‘ loss ’ is called return loss(RL).*

Radiation pattern : *The radiation characteristics of an antenna as a function of spatial coordinates. Normally, the pattern is measured in the far-field region and is represented graphically.*

Polarization : *The sense of the wave radiated by an antenna. This can be horizontal, vertical, elliptical , or circular (left or right hand circularity), depending on the design and application. The polarization of the antenna is based on the orientation of the electric or E field component. The polarization must be matched between two antennas to receive the maximum field intensity. Dependent on the antenna type, it is possible to radiate linear, elliptical and circular polarizations.*

Gain value : *The increase in effective radiated power in the desired direction of the major lobe.*

Peak gain : *The highest gain value in 360 degrees, which means the antenna efficiency at this angle is the best.*

Cable loss : *When RF signal transmitting in the coaxial cable, due to the material of the cable, the power may dissipate into to the air in the form of heat. So when we try to measure the gain of an antenna, we have to offset the cable loss. The power loss of coaxial cable(Φ=1.13 mm) at 2.4~2.5 GHz is 3dB per 1000 mm and 5dB per 1000 mm at 5.15~5.35 GHz. In this case, the cable length is about 460 mm , so the cable loss when RF signal transmitting at 2.4~2.5 GHz is about 1.4 dB . Which means we have to offset the cable loss to the gain value that we measure from the radiation pattern and that is the true antenna*

gain (G_a) we want .

Material Specification

- Connector (I-PEX)
- Coaxial Cable (HITACHI & SUMITOMO)
- PORON
- T4000
- Metal
- TUBE
- Mylar

PART NO.
20278-**1R-**

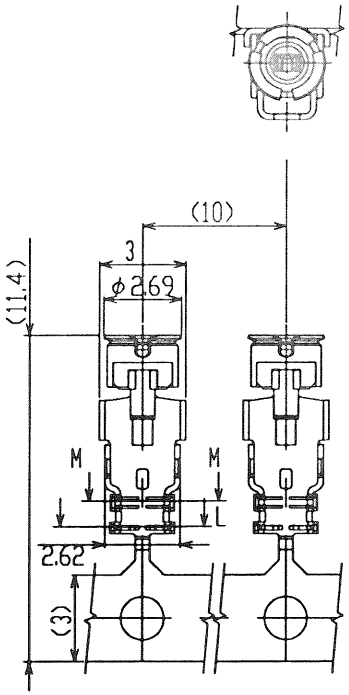

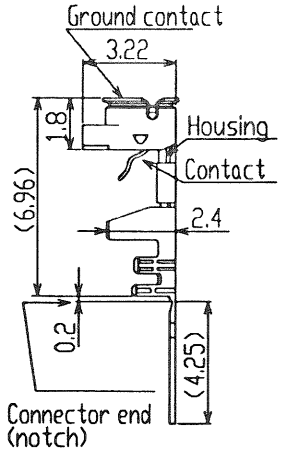

Part No.20278-101R-**
For hand tool
(with notch)

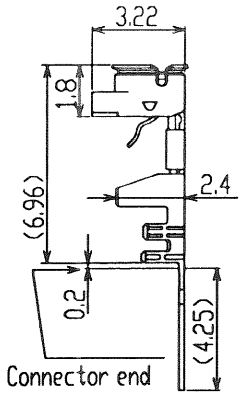

Part No.20278-111R-**
For semi auto
termination machine
(without notch)

GENERAL TOLERANCE	
6 MAX.	±0.2
6 OVER MAX.30	±0.3
30 OVER MAX.120	±0.5
ANGLE	±2°

FORM REV.4

REV	ECN	BY	DATE	APP
7B	Z2180	K.O	JUL/29/02	E.K
6B	Z2146	K.O	JUN/24/02	K.K
5B	Z2117	A.H	MAY/17/02	K.K
4	Z2023	K.O	JAN/30/02	E.K
3	Z1256	K.O	NOV/14/01	K.K
2	Z1197	K.O	AUG/27/01	K.K
1	Z1118	K.O	JUN/26/01	K.K
0	Z1109	K.O	JUN/13/01	

REV.RECORD

SERIES No. 2814

WAS T

DESIGN'D BY: K.Ohbayashi DATE: JUN/13/01
CHK'D BY: DATE:
APP'D BY: K.Katabuchi DATE: JUN/13/01

CUSTOMER COPY

PROJECTION

I-PEX Interconnect and Packaging Electronics TOKYO,JAPAN

TITLE: MHF series micro coaxial connector plug vertical

SCALE	UNIT	DWG. No.	SHEET	REV.
6/1	mm	20278	1/3	7B

Part No.	20278-101R-08 / 20278-111R-08	20278-101R-13 / 20278-111R-13	20278-101R-32 / 20278-111R-32	20278-101R-18 / 20278-111R-18
Applicable cable nominal dimension	2.09±0.1, 1.25±0.1, 1.16±0.1, φ0.81, (φ0.65), φ0.4, AWG#36(7/0.05)	1.55±0.1, 0.82±0.1, 1.7±0.1, φ1.13, (φ0.93), φ0.68, AWG#32(7/0.08)	2.09±0.1, 1.25±0.1, 1.16±0.1, φ1.32, (φ1.12), φ0.66, AWG#32(7/0.08)	RG178 B/U, 2.09±0.1, 1.25±0.1, 1.16±0.1, φ1.8, (φ1.35), φ0.84, AWG#30(7/0.102)
Braided shield of Outer conductor 外部導体の編組	Single / 1重編組	Single / 1重編組	Double / 2重編組	Single / 1重編組
P/N of hand Tool / P/N of semi auto termination machine	(Under developing)	90187-013 / 90213-013	(Under developing)	(Under developing)
Sect. M-M	1.68, 1.12	2.24, 1.48	2.29, 1.56	2.68, 1.85
Sect. L-L	1.72, 1.19	2.28, 1.55	2.37, 1.71	3.1, 2.26
Crimp Height CH-1	Under developing	1.34~1.40	Under developing	Under developing
Crimp Height CH-2	Under developing	1.06~1.14	Under developing	Under developing
Crimp Height CH-3	Under developing	1.15~1.35	Under developing	Under developing

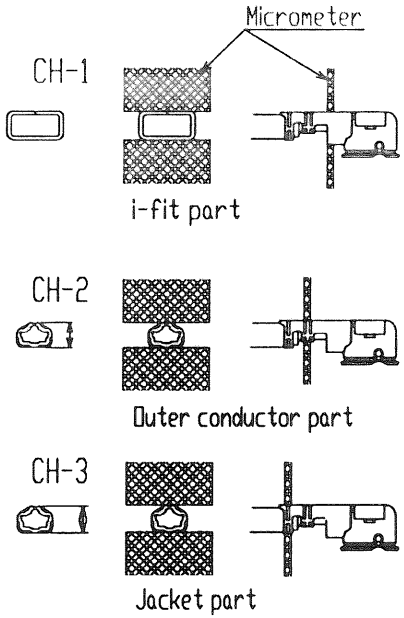

Crimp Height

GENERAL TOLERANCE	
6 MAX.	±0.2
6 OVER MAX.30	±0.3
30 OVER MAX.120	±0.5
ANGLE	±2°

DESIGN'D BY	DATE	I-PEX Interconnect and Packaging Electronics TOKYO, JAPAN	
CHK'D BY	DATE	TITLE MHF series micro coaxial connector plug vertical	
APP'D BY	DATE		
CUSTOMER COPY	PROJECTION	SCALE 6/1 UNIT mm	DWG. No. 20278 SHEET 2/3 REV. 7B

FORM REV.4

WAS T

Notes

1.Material
(1) Housing : PBT , UL94V-0 , black
(2) Contact
phosphor bronze
gold plating
(3) Ground contact
phosphor bronze , gold plating
2.Packing : reel
3.Mating partner part No.
: 20279-001E-01

1. 材 料
(1) ハウジング：PBT, UL94V-0, 黒色
(2) コンタクト
：りん青銅
：金メッキ
(3) グランドコンタクト
：りん青銅, 金メッキ
2. 梱包 ： リール
3. かん合相手 part No.
：20279-001E-01

4. Permissible load of cable at mating

コネクタかん合後のケーブルに対する荷重

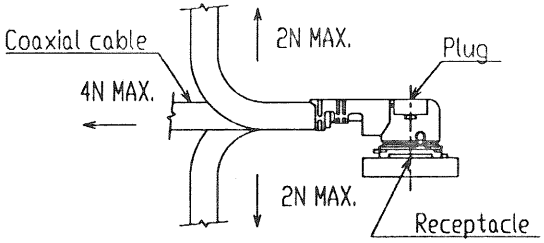

5. Suggestions for mating & unmating operation.

5-1 Mating.
Please mate the connector straightly to vertical direction as much as possible, adjusting the mating axis of plug and receptacle.
As excessive slant angle mating may break the connector , please don't do it.

5. コネクタかん合時および抜去時の注意

5-1 コネクタ挿入時
PlugとReceptacleのかん合軸を合わせ、できるだけ垂直に挿入して下さい。
極端な斜め挿入は行わないで下さい。
コネクタ破損の原因となりますので、過度なこじり挿抜は行わないで下さい。

5-2 Unmating.

(1) In case of unmating by pulling tool.
Please use the pulling tool as the following drawing, and please pull plug to vertical direction as directly as possible.

5-2 コネクタ抜去時

(1) 抜去ジグを用いる場合
下図のようにできるだけ垂直に引き抜いて下さい。

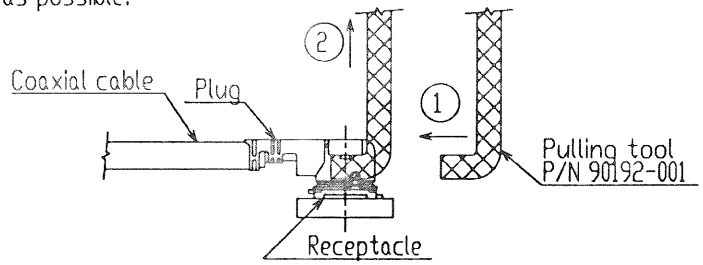

(2) In case of unmating directly by hand
Please catch the catching area of plug , and please pull plug to vertical direction as directly as possible.

(2) 手で直接引き抜く場合
下図の保持部をつかみ、できるだけ垂直に引き抜いて下さい。

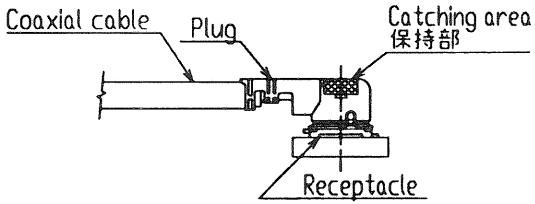

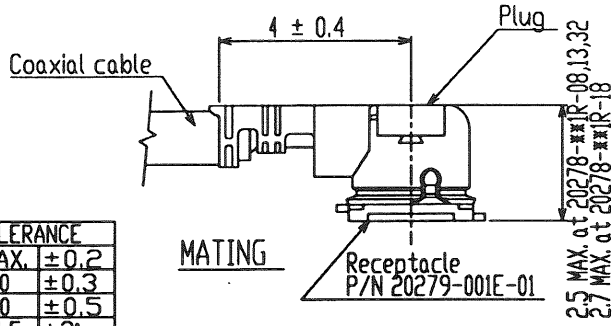

MATING

GENERAL TOLERANCE	
6 MAX.	±0.2
6 OVER MAX.30	±0.3
30 OVER MAX.120	±0.5
ANGLE	±2°

DESIGN'D BY	DATE	I-PEX Interconnect and Packaging Electronics TOKYO, JAPAN				
CHK'D BY	DATE	TITLE MHF series micro coaxial connector plug vertical				
APP'D BY	DATE					
CUSTOMER COPY	PROJECTION	SCALE -/-	UNIT mm	DWG. No. 20278	SHEET 3/3	REV. 7B

FORM REV.4

WAS T

PRODUCT SPECIFICATION
製 品 規 格

No. PRS-1176

MHF series micro coaxial connector

Qualification Test Report No. TR-1021

					Prepared by	Reviewed by	Approved by
1	S1053	K.O	Nov/14/'01	K.K	K.Ohbayashi	E,Kawabe	K.Katabuchi
0	S1025	K.O	Jun/25/'01				
REV.	ECN	BY	DATE	APP.	JUN / 25 / 01	Jun / 25 / 01	Jun / 29 / 01
REVISION RECORD							

DOCUMENT CLASSIFICATION	TITLE	No.
Product Specification 製品規格	MHF series micro coaxial connector	PRS-1176

1. Scope / 序言

MHF series micro coaxial connector is a wire to board connector for AWG#36,32,30 coaxial cable .
MHF series micro coaxial connector は、AWG＃36,32,30同軸ケーブルの基板対ワイヤーコネクタである。

2. Objectives / 目的

This specification covers the requirements for product performance and test methods of MHF series microcoaxial connector
本規格は、MHF series micro coaxial connector の性能と試験条件について規定する。

3. Part No. , construction , material and finish / 構成、材料及び仕上げ

(1) Part No. Plug : 20278-001R-08,-13,-18 , Receptacle : 20279-001E-01
(2) Construction, material and finish of the connector are covered as each drawings.
構成、材料及び仕上げは、各図面に指定されている通りとする。

4. Applicable cable ／ 適合ケーブル

4-1 Part No. 20278-001R-08

(1) Description

Inner conductor : AWG#36(7/0.05)
Silver plating annealed copper wire or silver plating tin-copper alloy
Dielectric core : Fluoro-plastics ,diameter 0.4(+0.04,-0.02)mm , nominal thickness 0.125mm
Outer conductor : 8/5/0.05 , nominal diameter 0.65mm , silver plating annealed copper wire
Jacket : Fluoro-plastics , diameter 0.81(+0.04,-0.02)mm , nominal thickness 0.08mm

(2) Requirements

Characteristic impedance : 50(+3,-3)ohm by TDR method (raise time 40ps)
Nominal capacitance: 96 pF/m
Conductor resistance of inner conductor at 293K (20℃) : 1400 ohm/km MAX.
Insulation resistance : 1000 mega-ohm.km MIN.
Dielectric withstand voltage : no breakdown at AC1000V for 1 minutes.

(1) 構成

中心導体 ： AWG＃36(7／0. 05),銀メッキ軟銅線または銀メッキすず入り銅線
誘電体 ： フッ素樹脂,外径0. 4(＋0. 04,－0. 02),標準厚さ0. 125mm
外部導体 ： 8／5／0. 05,標準外径0. 65mm, 銀メッキ軟銅線
ジャケット ： フッ素樹脂,外径0. 81(＋0. 04,－0. 02)mm, 標準厚さ0. 08mm

(2) 仕様

特性インピーダンス ： 50±3Ω (TDR,ライズタイム40ps)
標準静電容量 ： 96pF／m
293K(20℃)時の中心導体導体抵抗 ： 1400Ω ／km以下
絶縁抵抗 ： 1000MΩ ・km以上
耐電圧 ： AC1000V・1分間にて絶縁破壊の無い事

4-2 Part No. 20278-001R-13

(1) Description

Inner conductor : AWG#32(7/0.08)
Silver plating annealed copper wire or silver plating tin-copper alloy
Dielectric core : Fluoro-plastics , diameter 0.68(+0.04,-0.02)mm , nominal thickness 0.22mm
Outer conductor : 16/4/0.05 , nominal diameter 0.93mm , silver plating annealed copper wire
Jacket : Fluoro-plastics , diameter 1.13(+0.08,-0.05)mm , nominal thickness 0.1mm

DOCUMENT CLASSIFICATION	TITLE	No.
Product Specification 製品規格	MHF series micro coaxial connector	PRS-1176

(2) Requirements
Characteristic impedance : 50(+2,-2)ohm by TDR method (raise time 40ps)
Nominal capacitance: 97 pF/m
Conductor resistance of inner conductor at 293K (20℃) : 520 ohm/km MAX.
Insulation resistance : 1500 mega-ohm.km MIN.
Dielectric withstand voltage : no breakdown at AC1000V for 1 minutes.

(1) 構成
中心導体 ： AWG＃32(7／0. 08),銀メッキ軟銅線または銀メッキすず入り銅線
誘電体 ： フッ素樹脂,外径0. 68(＋0. 04,－0. 02),標準厚さ0. 22mm
外部導体 ： 16／4／0. 05,標準外径0. 93mm, 銀メッキ軟銅線
ジャケット ： フッ素樹脂,外径1. 13(＋0. 08,－0. 05)mm, 標準厚さ0. 1mm

(2) 仕様
特性インピーダンス ： 50±2Ω (TDR,ライズタイム40ps)
標準静電容量 ： 97pF／m
293K(20℃)時の中心導体導体抵抗 ： 520Ω ／km以下
絶縁抵抗 ： 1500MΩ ・km以上
耐電圧 ： AC1000V・1分間にて絶縁破壊の無い事

4-3 Part No. 20278-001R-32

(1) Description
Inner conductor : AWG#32(7/0.08)
Silver plating annealed copper wire or silver plating tin-copper alloy
Dielectric core : Fluoro-plastics , diameter 0.66(+0.05,-0.05)mm , nominal thickness 0.21mm
First outer conductor : 16/5/0.05, tin plating annealed copper wire
Second outer conductor :16/6/0.05, nominal diameter 1.12mm , tin plating annealed copper wire
Jacket : Fluoro-plastics , diameter 1.32(+0.1,-0.1)mm , nominal thickness 0.1mm

(2) Requirements
Characteristic impedance : 50(+2,-2)ohm by TDR method (raise time 40ps)
Nominal capacitance: 95 pF/m
Conductor resistance of inner conductor at 293K (20℃) : 520 ohm/km MAX.
Insulation resistance : 1500 mega-ohm.km MIN.
Dielectric withstand voltage : no breakdown at AC1000V for 1 minutes.

(1) 構成
中心導体 ： AWG＃32(7／0. 08),銀メッキ軟銅線または銀メッキすず入り銅線
誘電体 ： フッ素樹脂,外径0. 66(＋0. 05,－0. 05),標準厚さ0. 21mm
外部導体(内側) ： 16／5／0. 05,すずメッキ軟銅線
外部導体(外側) ： 16／6／0. 05,標準外径1. 12mm, すずメッキ軟銅線
ジャケット ： フッ素樹脂,外径1. 32(＋0. 1,－0. 1)mm, 標準厚さ0. 1mm

(2) 仕様
特性インピーダンス ： 50±2Ω (TDR,ライズタイム40ps)
標準静電容量 ： 95pF／m
293K(20℃)時の中心導体導体抵抗 ： 520Ω ／km以下
絶縁抵抗 ： 1500MΩ ・km以上
耐電圧 ： AC1000V・1分間にて絶縁破壊の無い事

DOCUMENT CLASSIFICATION	TITLE	No.
Product Specification 製品規格	MHF series micro coaxial connector	PRS-1176

4-4 Part No. 20278-001R-18
RG178 B/U

(1) Description

Inner conductor : AWG#30(7/0.102) , silver plating copper clad steel wire
Dielectric core : Fluoro-plastics , diameter 0.84(+0.03,-0.03)mm , nominal thickness 0.268mm
Outer conductor : 16/3/0.1 , nominal diameter 1.35mm , silver plating copper wire
Jacket : Fluoro-plastics , diameter 1.8(+0.1,-0.1)mm , nominal thickness 0.23mm

(2) Requirements

Characteristic impedance : 50(+2,-2)ohm by TDR method (raise time 40ps)
Nominal capacitance: 95 pF/m
Conductor resistance of inner conductor at 293K (20℃) : 805 ohm/km MAX.
Insulation resistance : 1500 mega-ohm.km MIN.
Dielectric withstand voltage : no breakdown at AC2000V for 1 minutes.

(1) 構成

中心導体 ： AWG＃30(7／0. 102),銀メッキ銅被鋼線
誘電体 ： フッ素樹脂,外径0. 84(±0. 03),標準厚さ0. 268mm
外部導体 ： 16／3／0. 1,標準外径1. 35mm, 銀メッキ軟銅線
ジャケット ： フッ素樹脂,外径1. 8(±0. 1)mm, 標準厚さ0. 23mm

(2) 仕様

特性インピーダンス ： 50±2Ω (TDR,ライズタイム40ps)
標準静電容量 ： 95pF／m
293K(20℃)時の中心導体導体抵抗 ： 805Ω ／km以下
絶縁抵抗 ： 1500MΩ ・km以上
耐電圧 ： AC2000V・1分間にて絶縁破壊の無い事

5. Ratings / 定格

(1) Rated voltage / 電圧 ： AC60Vrms
(2) Nominal characteristic impedance／公称特性インピーダンス ： 50Ω
(3) Frequency / 周波数 ： DC～3GHz
(4) VSWR ： 1. 3 MAX.
(5) Service Temperature / 使用温度範囲 ： 233～363K(－40～＋90℃)

6. Test methods and performance / 試験及び性能

6-1 Test condition / 試験条件

Unless otherwise specified, all tests and measurements shall be performed under the following conditions in accordance with MIL-STD-202
全ての測定と試験は、MIL-STD-202 に基づき以下の条件で行う。.
Temperature / 温度 ： 288～308K (15～35℃)
Humidity / 湿度 ： 45～75%RH

DOCUMENT CLASSIFICATION	TITLE	No.
Product Specification 製品規格	MHF series micro coaxial connector	PRS-1176

6-2 Sample quantity / 試料数

(1) Insulation resistance / 絶縁抵抗 : 10pcs.
(2) Dielectric withstanding voltage / 耐電圧 : 10pcs.
(3) VSWR : 5pcs.
(4) Mating & unmating force / 挿抜力 : 10pcs
(5) Durability / 耐久性 : 10pcs.
(6) Cable retention force / ケーブル保持力 : 10pcs.
(7) Vibration / 振動 : 10pcs.
(8) Shock / 衝撃 : 10pcs.
(9) Thermal shock / 温度サイクル : 10pcs.
(10) Humidity / 湿度 : 10pcs.
(11) Salt water spray / 塩水噴霧 : 10pcs.
(12) Solderability / 半田付け性 : 10pcs.
(13) Reflow soldering heat resistance / 半田耐熱性 : 10pcs.

6-3-1 Electrical / 電気的性能
(1) Contact Resistance / 接触抵抗

A.Testing:Solder the receptacle connector to the test board and mate the plug connector together, then measure the contact resistance as shown in Fig.1 by the four terminal method.
Apply the low level condition in accordance with MIL-STD-202, Method 307.
Open circuit voltage : 20mV MAX
Circuit current : 10mA MAX. (DC or AC1kHz)
Contact resistance of inner contact : <resistance of A-E> - <resistance of B-E>
Contact resistance of ground contact : <resistance of A-D> - <resistance of B-D>

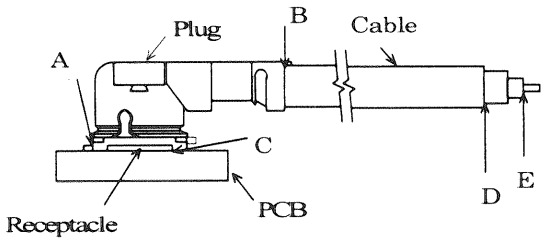

Fig.1

B.Requirements :
Contact resistance of inner contact initial 20 milli-ohm MAX. after testing 25milli-ohm MAX.
Contact resistance of ground contact initial 10 milli-ohm MAX. after testing 15milli-ohm MAX.

A. 試験法:テスト基板にリセプタクルコネクタを半田付けし、プラグコネクタと嵌合させ、Fig. 1のように4端子法にて下記の条件で測定する。 MIL-STD-202 試験法 307 に準拠。
開回路電圧: 20mV以下
試験電流 : 10mA(DCもしくはAC1kHz)
中心導体 : ＜A－E間の電気抵抗＞－＜B－E間の電気抵抗＞
外部導体 : ＜A－D間の電気抵抗＞－＜B－D間の電気抵抗＞
B.必要条件: 中心導体 初期 20mΩ 以下, 試験後 25mΩ 以下
外部導体 初期 10mΩ 以下, 試験後 15mΩ 以下

DOCUMENT CLASSIFICATION	TITLE	No.
Product Specification 製品規格	MHF series micro coaxial connector	PRS-1176

(2) Insulation resistance / 絶縁抵抗

A. Testing : Mate the plug and receptacle connector together, then apply DC 100 V between the inner contact and the ground contact in accordance with MIL-STD-202, Method 302.

B.Requirements : Initial 500 Mohm MIN. after testing 100 Mohm MIN.

A.試験法: リセプタクル及びプラグコネクタを互いに嵌合させ、中心導体と外部導体の間に DC 100Vを印加し、測定する。MIL-STD-202 試験法 302 に準拠。

B.必要条件: 初期 500MΩ 以上 試験後 100MΩ 以上

(3) Dielectric withstanding voltage / 耐電圧

A. Testing : Mate the receptacle and plug connector together, then apply AC 200 Vrms between the inner contact and the ground contact for a minute in accordance with MIL-STD-202, Method 301.

B.Requirements : No creeping discharge, flashover, nor insulator breakdown shall occur.

A.試験法: リセプタクル及びプラグコネクタを互いに嵌合させ、中心導体と外部導体の間にAC200V(実効値)を一分間印加する。 MIL-STD-202 試験法 301 に準拠。

B.必要条件: 沿面放電、空中放電、絶縁破壊等の異常のないこと。

(4) VSWR

A. Testing : Measure the VSWR as shown in Fig.3 by the network analyzer.

Frequency :100M~3GHz

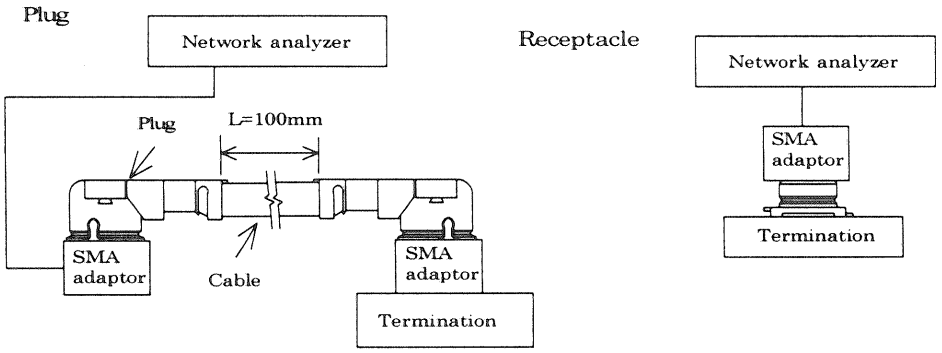

Fig.3

B.Requirements : 1.3 MAX.

A.試験法: ネットワークアナライザーにて Fig.3 のようにVSWRを測定する。
周波数 : 100M～3GHz

B.必要条件: 1．3以下

6-3-2 Mechanical / 機械的性能

(1) Mating & unmating force / 挿抜力

A. Testing : Mate and unmate the receptacle connector (soldered to the test board) and plug at a speed 25±3mm/minutes along the mating by the push-on/pull-off machine .

B.Requirements :

Total mating force : Initial 20N MAX. after 30 cycles 15N MAX.

Total unmating force : Initial 5N MIN. after 30 cycles 3N MIN.

Unmating force of inner contact : Initial 0.15N MIN. after 30 cycles 0.1N MIN

DOCUMENT CLASSIFICATION	TITLE	No.
Product Specification 製品規格	MHF series micro coaxial connector	PRS-1176

A.試験法:挿抜試験機を用いて、基板に半田付けしたリセプタクルとプラグを嵌合軸と平行に毎分25±3mmの速度で挿抜する。

B.必要条件:

総合挿抜力:初回挿入力 20N以下 30回後15N以下 ,初回抜去力 5N以上 ,30回後抜去力 3N以上

中心導体 :初回抜去力 0. 15N以上 ,30回後抜去力 0. 1N以上

(2) Durability / 耐久性

A. Testing : Mate and umate the receptacle connector (soldered to the test board) and plug 30 cycles at a speed 25±3mm/minutes along the mating by the push-on/pull-off machine .

B.Requirements :

Contact resistance of inner contact initial 20 milli-ohm MAX. after testing 25milli-ohm MAX.

Contact resistance of ground contact initial 10 milli-ohm MAX. after testing 15milli-ohm MAX.

A.試験法:挿抜試験機を用いて、基板に半田付けしたリセプタクルとプラグを嵌合軸と平行に毎分25±3mmの速度で30回挿抜する。

B.必要条件 中心導体接触抵抗 : 初期 20mΩ 以下, 試験後 25mΩ 以下

外部導体接触抵抗 : 初期 10mΩ 以下, 試験後 15mΩ 以下

(3) Cable retention force / ケーブル保持力

A. Testing : Apply force on the cable as shown in Fig.2.

During the testing, run 100mA DC to check electrical discontinuity.

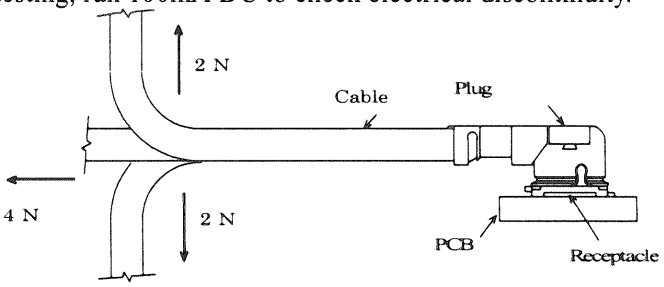

Fig.2

B.Requirements

Appearance : Looseness between the parts, chipping, breakage or other abnormality shall not occur.

Electrical discontinuity : No electrical discontinuity grater than 1 micro-sec. shall occur.

Contact resistance of inner contact initial 20 milli-ohm MAX. after testing 25milli-ohm MAX.

Contact resistance of ground contact initial 10 milli-ohm MAX. after testing 15milli-ohm MAX.

A.試験法:Fig. 2のようにケーブルに力を加える。尚、試験中にDC100mAの電流を流して電気的瞬断を確認する。

B.必要条件 外観 : 部品のゆるみ、欠け、割れ、その他外観上の異常の無いこと。

電流瞬断 : 試験中、1マイクロ秒を超える電気的瞬断の無いこと。

中心導体接触抵抗 : 初期 20mΩ 以下, 試験後 25mΩ 以下

外部導体接触抵抗 : 初期 10mΩ 以下, 試験後 15mΩ 以下