Wireless Receiver

PLL-16D(RECEIVER)

Operating Manual

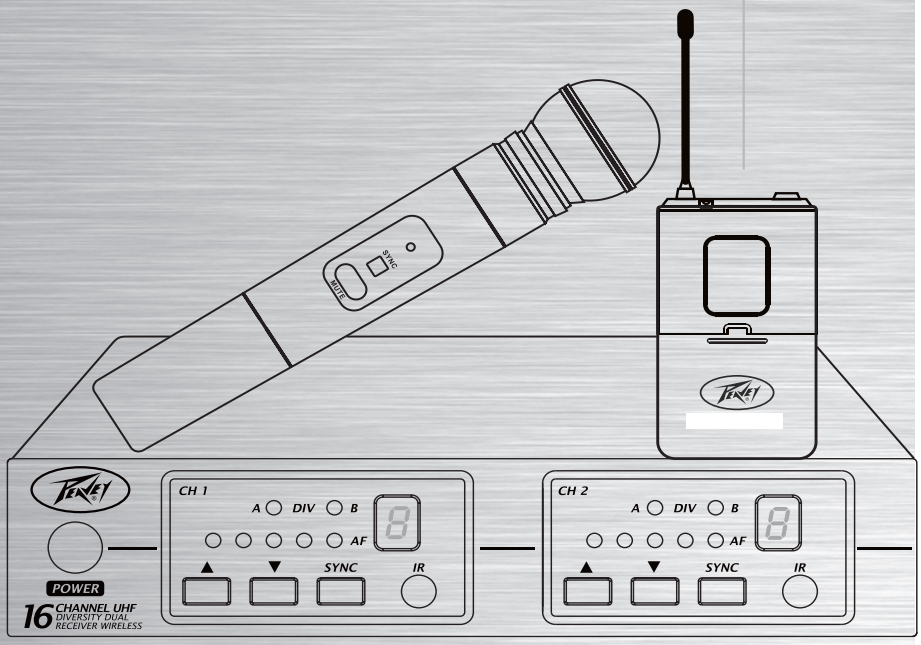

www.peavey.com

ENGLISH

Intended to alert the user to the presence of uninsulated “dangerous voltage” within the product’s enclosure that may be of sufficient magnitude to constitute a risk of electric shock to persons.

Intended to alert the user of the presence of important operating and maintenance (servicing) instructions in the literature accompanying the product.

CAUTION: Risk of electrical shock — DO NOT OPEN!
CAUTION: To reduce the risk of electric shock, do not remove cover. No user serviceable parts inside. Refer servicing to qualified service personnel.

WARNING: To prevent electrical shock or fire hazard, this apparatus should not be exposed to rain or moisture, and objects filled with liquids, such as vases, should not be placed on this apparatus. Before using this apparatus, read the operating guide for further warnings.

ESPAÑOL

Este símbolo tiene el propósito, de alertar al usuario de la presencia de “(voltaje) peligroso” sin aislamiento dentro de la caja del producto y que puede tener una magnitud suficiente como para constituir riesgo de descarga eléctrica.

Este símbolo tiene el propósito de alertar al usario de la presencia de instruccones importantes sobre la operación y mantenimiento en la información que viene con el producto.

PRECAUCION: Riesgo de descarga eléctrica ¡NO ABRIR!
PRECAUCION: Para disminuír el riesgo de descarga eléctrica, no abra la cubierta. No hay piezas útiles dentro. Deje todo mantenimiento en manos del personal técnico cualificado.

ADVERTENCIA: Para prevenir choque electrico o riesgo de incendios, este aparato no se debe exponer a la lluvia o a la humedad. Los objetos llenos de liquidos, como los floreros, no se deben colocar encima de este aparato. Antes de usar este aparato, lea la guia de funcionamiento para otras advertencias.

FRANÇAIS

Ce symbole est utilisé dans ce manuel pour indiquer à l’utilisateur la présence d’une tension dangereuse pouvant être d’amplitude suffisante pour constituer un risque de choc électrique.

Ce symbole est utilisé dans ce manuel pour indiquer à l’utilisateur qu’il ou qu’elle trouvera d’importantes instructions concernant l’utilisation et l’entretien de l’appareil dans le paragraphe signalé.

ATTENTION: Risques de choc électrique — NE PAS OUVRIR!
ATTENTION: Afin de réduire le risque de choc électrique, ne pas enlever le couvercle. Il ne se trouve à l’intérieur aucune pièce pouvant être reparée par l’utilisateur. Confiez l’entretien et la réparation de l’appareil à un réparateur Peavey agréé.

AVIS: Dans le but de reduire les risques d’incendie ou de decharge electrique, cet appareil ne doit pas etre expose a la pluie ou a l’humidite et aucun objet rempli de liquide, tel qu’un vase, ne doit etre pose sur celui-ci. Avant d’utiliser de cet appareil, lisez attentivement le guide fonctionnant pour avertissements supplémentaires.

IMPORTANT SAFETY INSTRUCTIONS

WARNING: When using electrical products, basic cautions should always be followed, including the following:

1. Read these instructions.
2. Keep these instructions.
3. Heed all warnings.
4. Follow all instructions.
5. Do not use this apparatus near water.
6. Clean only with a dry cloth.
7. Do not block any of the ventilation openings. Install in accordance with manufacturer's instructions.
8. Do not install near any heat sources such as radiators, heat registers, stoves or other apparatus (including amplifiers) that produce heat.
9. Do not defeat the safety purpose of the polarized or grounding-type plug. A polarized plug has two blades with one wider than the other. A grounding type plug has two blades and a third grounding plug. The wide blade or third prong is provided for your safety. If the provided plug does not fit into your outlet, consult an electrician for replacement of the obsolete outlet.
10. Protect the power cord from being walked on or pinched, particularly at plugs, convenience receptacles, and the point they exit from the apparatus.
11. Only use attachments/accessories provided by the manufacturer.
12. Use only with a cart, stand, tripod, bracket, or table specified by the manufacturer, or sold with the apparatus. When a cart is used, use caution when moving the cart/apparatus combination to avoid injury from tip-over.
13. Unplug this apparatus during lightning storms or when unused for long periods of time.
14. Refer all servicing to qualified service personnel. Servicing is required when the apparatus has been damaged in any way, such as power-supply cord or plug is damaged, liquid has been spilled or objects have fallen into the apparatus, the apparatus has been exposed to rain or moisture, does not operate normally, or has been dropped.
15. Never break off the ground pin. Write for our free booklet "Shock Hazard and Grounding." Connect only to a power supply of the type marked on the unit adjacent to the power supply cord.
16. If this product is to be mounted in an equipment rack, rear support should be provided.
17. Note for UK only: If the colors of the wires in the mains lead of this unit do not correspond with the terminals in your plug, proceed as follows: a) The wire that is colored green and yellow must be connected to the terminal that is marked by the letter E, the earth symbol, colored green or colored green and yellow. b) The wire that is colored blue must be connected to the terminal that is marked with the letter N or the color black. c) The wire that is colored brown must be connected to the terminal that is marked with the letter L or the color red.
18. This electrical apparatus should not be exposed to dripping or splashing and care should be taken not to place objects containing liquids, such as vases, upon the apparatus.
19. The on/off switch in this unit does not break both sides of the primary mains. Hazardous energy can be present inside the chassis when the on/off switch is in the off position. The mains plug or appliance coupler is used as the disconnect device, the disconnect device shall remain readily operable.
20. Exposure to extremely high noise levels may cause a permanent hearing loss. Individuals vary considerably in susceptibility to noise-induced hearing loss, but nearly everyone will lose some hearing if exposed to sufficiently intense noise for a sufficient time. The U.S. Government's Occupational Safety and Health Administration (OSHA) has specified the following permissible noise level exposures:

Duration Per Day In Hours	Sound Level dBA, Slow Response
8	90
6	92
4	95
3	97
2	100
1 1/2	102
1	105
1/2	110
1/4 or less	115

According to OSHA, any exposure in excess of the above permissible limits could result in some hearing loss. Earplugs or protectors to the ear canals or over the ears must be worn when operating this amplification system in order to prevent a permanent hearing loss, if exposure is in excess of the limits as set forth above. To ensure against potentially dangerous exposure to high sound pressure levels, it is recommended that all persons exposed to equipment capable of producing high sound pressure levels such as this amplification system be protected by hearing protectors while this unit is in operation.

SAVE THESE INSTRUCTIONS!

INSTRUCCIONES IMPORTANTES PARA SU SEGURIDAD

CUIDADO: Cuando use productos electrónicos, debe tomar precauciones básicas, incluyendo las siguientes:

1. Lea estas instrucciones.
2. Guarde estas instrucciones.
3. Haga caso de todos los consejos.
4. Siga todas las instrucciones.
5. No usar este aparato cerca del agua.
6. Limpiar solamente con una tela seca.
7. No bloquear ninguna de las salidas de ventilación. Instalar de acuerdo a las instrucciones del fabricante.
8. No instalar cerca de ninguna fuente de calor como radiadores, estufas, hornos u otros aparatos (incluyendo amplificadores) que produzcan calor.
9. No retire la patilla protectora del enchufe polarizado o de tipo “a Tierra”. Un enchufe polarizado tiene dos puntas, una de ellas más ancha que la otra. Un enchufe de tipo “a Tierra” tiene dos puntas y una tercera “a Tierra”. La punta ancha (la tercera) se proporciona para su seguridad. Si el enchufe proporcionado no encaja en su enchufe de red, consulte a un electricista para que reemplaze su enchufe obsoleto.
10. Proteja el cable de alimentación para que no sea pisado o pinchado, particularmente en los enchufes, huecos, y los puntos que salen del aparato.
11. Usar solamente añadidos/accesorios proporcionados por el fabricante.
12. Usar solamente un carro, pie, trípode, o soporte especificado por el fabricante, o vendido junto al aparato. Cuando se use un carro, tenga cuidado al mover el conjunto carro/aparato para evitar que se dañe en un vuelco. No suspenda esta caja de ninguna manera.
13. Desenchufe este aparato durante tormentas o cuando no sea usado durante largos periodos de tiempo.
14. Para cualquier reparación, acuda a personal de servicio cualificado. Se requieren reparaciones cuando el aparato ha sido dañado de alguna manera, como cuando el cable de alimentación o el enchufe se han dañado, algún líquido ha sido derramado o algún objeto ha caído dentro del aparato, el aparato ha sido expuesto a la lluvia o la humedad, no funciona de manera normal, o ha sufrido una caída.
15. Nunca retire la patilla de Tierra.Escríbanos para obtener nuestro folleto gratuito “Shock Hazard and Grounding” (“Peligro de Electrocución y Toma a Tierra”). Conecte el aparato sólo a una fuente de alimentación del tipo marcado al lado del cable de alimentación.
16. Si este producto va a ser enracado con más equipo, use algún tipo de apoyo trasero.
17. Nota para el Reino Unido solamente: Si los colores de los cables en el enchufe principal de esta unidad no corresponden con los terminales en su enchufe, proceda de la siguiente manera: a) El cable de color verde y amarillo debe ser conectado al terminal que está marcado con la letra E, el símbolo de Tierra (earth), coloreado en verde o en verde y amarillo. b) El cable coloreado en azul debe ser conectado al terminal que está marcado con la letra N o el color negro. c) El cable coloreado en marrón debe ser conectado al terminal que está marcado con la letra L o el color rojo.
18. Este aparato eléctrico no debe ser sometido a ningún tipo de goteo o salpicadura y se debe tener cuidado para no poner objetos que contengan líquidos, como vasos, sobre el aparato.
19. El interruptor de en/lejos en esta unidad no rompe ambos lados de la red primaria. La energía peligrosa puede ser presente dentro del chasis cuando el interruptor de en/lejos está en el de la posición. El tapón de la red o el acoplador del aparato son utilizados como el desconecta dispositivo, el desconecta dispositivo se quedará fácilmente operable.
20. La exposición a altos niveles de ruido puede causar una pérdida permanente en la audición. La susceptibilidad a la pérdida de audición provocada por el ruido varía según la persona, pero casi todo el mundo perderá algo de audición si se expone a un nivel de ruido suficientemente intenso durante un tiempo determinado. El Departamento para la Salud y para la Seguridad del Gobierno de los Estados Unidos (OSHA) ha especificado las siguientes exposiciones al ruido permisibles:

Duración por Día en Horas	Nivel de Sonido dBA, Respuesta Lenta
8	90
6	92
4	95
3	97
2	100
1 ½	102
1	105
½	110
¼ o menos	115

De acuerdo al OSHA, cualquier exposición que exceda los límites arriba indicados puede producir algún tipo de pérdida en la audición. Protectores para los canales auditivos o tapones para los oídos deben ser usados cuando se opere con este sistema de sonido para prevenir una pérdida permanente en la audición, si la exposición excede los límites indicados más arriba. Para protegerse de una exposición a altos niveles de sonido potencialmente peligrosa, se recomienda que todas las personas expuestas a equipamiento capaz de producir altos niveles de presión sonora, tales como este sistema de amplificación, se encuentren protegidas por protectores auditivos mientras esta unidad esté operando.

GUARDE ESTAS INSTRUCCIONES!

INSTRUCTIONS IMPORTANTES DE SECURITE

ATTENTION: L'utilisation de tout appareil électrique doit être soumise aux precautions d'usage incluant:

1. Lire ces instructions.
2. Gardez ce manuel pour de futures références.
3. Prétez attention aux messages de précautions de ce manuel.
4. Suivez ces instructions.
5. N'utilisez pas cette unité proche de plans d'eau.
6. N'utilisez qu'un tissu sec pour le nettoyage de votre unité.
7. N'obstruez pas les systèmes de refroidissement de votre unité et installez votre unité en fonction des instructions de ce manuel.
8. Ne positionnez pas votre unité à proximité de toute source de chaleur.
9. Connectez toujours votre unité sur une alimentation munie de prise de terre utilisant le cordon d'alimentation fourni.
10. Protégez les connecteurs de votre unité et positionnez les cablages pour éviter toutes déconnexions accidentelles.
11. N'utilisez que des fixations approuvées par le fabriquant.
12. Lors de l'utilsation sur pied ou pole de support, assurez dans le cas de déplacement de l'ensemble enceinte/support de prévenir tout basculement intempestif de celui-ci.
13. Il est conseillé de déconnecter du secteur votre unité en cas d'orage ou de durée prolongée sans utilisation.
14. Seul un technicien agréé par le fabriquant est à même de réparer/contrôler votre unité. Celle-ci doit être contrôlée si elle a subit des dommages de manipulation, d'utilisation ou de stockage (humidité,…).
15. Ne déconnectez jamais la prise de terre de votre unité.
16. Si votre unité est destinée a etre montée en rack, des supports arriere doivent etre utilises.
17. Note pour les Royaumes-Unis: Si les couleurs de connecteurs du cable d'alimentation ne correspond pas au guide de la prise secteur, procédez comme suit: a) Le connecteur vert et jaune doit être connectrer au terminal noté E, indiquant la prise de terre ou correspondant aux couleurs verte ou verte et jaune du guide. b) Le connecteur Bleu doit être connectrer au terminal noté N, correspondnat à la couleur noire du guide. c) Le connecteur marron doit être connectrer au terminal noté L, correspondant à la couleur rouge du guide.
18. Cet équipement électrique ne doit en aucun cas être en contact avec un quelconque liquide et aucun objet contenant un liquide, vase ou autre ne devrait être posé sur celui-ci. 1
9. L'interrupter (on-off) dans cette unité ne casse pas les deux côtés du primaire principal. L'énergie hasardeuse peut être preésente dans châssis quand l'interrupter (on-off) est dans le de la position. Le bouchon principal ou atelage d'appareil est utilisé comme le débrancher l'appareil restera facilement opérable.
20. Une exposition à de hauts niveaux sonores peut conduire à des dommages de l'écoute irréversibles. La susceptibilité au bruit varie considérablement d'un individu à l'autre, mais une large majorité de la population expériencera une perte de l'écoute après une exposition à une forte puissance sonore pour une durée prolongée. L'organisme de la santé américaine (OSHA) a produit le guide ci-dessous en rapport à la perte occasionnée:

Durée par Jour (heures)	Niveau sonore moyen (dBA)
8	90
6	92
4	95
3	97
2	100
1 1/2	102
1	105
1/2	110
1/4 ou inférieur	115

D'après les études menées par le OSHA, toute exposition au delà des limites décrites ce-dessus entrainera des pertes de l'écoute chez la plupart des sujets. Le port de système de protection (casque, oreilette de filtrage,…) doit être observé lors de l'opération cette unité ou des dommages irréversibles peuvent être occasionnés. Le port de ces systèmes doit être observé par toutes personnes susceptibles d'être exposées à des conditions au delà des limites décrites ci-dessus.

GARDEZ CES INSTRUCTIONS!

FCC Compliancy Statement

This device complies with Part 15 of the FCC rules. Operation is subject to the following two conditions: (1) this device may not cause harmful interference, and (2) this device must accept any interference received, that may cause undesired operation.

Warning: Changes or modifications to the equipment not approved by Peavey Electronics Corp. can void the user's authority to use the equipment.

Note - This equipment has been tested and found to comply with the limits for a Class B digital device, pursuant to Part 15 of the FCC Rules. These limits are designed to provide reasonable protection against harmful interference in a residential installation. This equipment generates, uses and can radiate radio frequency energy and, if not installed and used in accordance with the instructions, may cause harmful interference to radio communications. However, there is no guarantee that interference will not occur in a particular installation. If this equipment does cause harmful interference to radio or television reception, which can be determined by turning the equipment off and on, the user is encouraged to try and correct the interference by one or more of the following measures.

- Reorient or relocate the receiving antenna.
- Increase the separation between the equipment and receiver.
- Connect the equipment into an outlet on a circuit different from that to which the receiver is connected.
- Consult the dealer or an experienced radio/TV technician for help.

Peavey Electronics Corporation • 5022 Hartley Peavey Drive • Meridian, MS • 39305
(601) 483-5365 • FAX (601) 486-1278 • www.peavey.com

Logo referenced in Directive 2002/96/EC Annex IV(OJ(L)37/38,13.02.03 and defined in EN 50419: 2005

The bar is the symbol for marking of new waste and is applied only to equipment manufactured after 13 August 2005

Correct Disposal of this product. This marking indicates that this product should not be disposed with other house hold wastes throughout the EU. To prevent possible harm to the environment or human health from uncontrolled waste disposal, recycle it responsibly to promote the sustainable reuse of material resources. To return your used device, please use the return and collection systems, or contact the retailer where the product was purchased. They can take this product for environmental safe recycling.

Logo documenté dans l'annexe de la Directive 2002/96/EC IV_(OJ(L)37/38,13.02.03 et défini par la norme EN 50419:2005

La barre est le symbole de signalisation des nouveaux déchets qui s'applique uniquement aux équipements fabriqués après le 13 août 2005

Recyclez correctement ce produit. Cette signalisation indique que ce produit ne doit pas être jeté avec les autres déchets domestiques dans les pays de l'UE. Pour éviter toute atteinte à l'environnement ou à la santé humaine par des décharges sauvages, recyclez ce produit de manière responsable pour encourager la réutilisation durable des ressources matérielles. Pour retourner votre appareil usé, veuillez utiliser les systèmes de collecte et de retour, ou contactez le revendeur à qui vous avez acheté le produit. Il prendra en charge ce produit de manière à protéger l'environnement.

Logotipo al que se hace referencia en la Directiva 2002/96/EC AnexoIV(OJ(L)37/38,13.02.03 y definido en EN 50419: 2005

La barra es el símbolo para marcar los nuevos desechos y se aplica solamente a equipamiento fabricado después del 13 de agosto de 2005

Forma correcta de deshacerse de este producto. Esta marca indica que este producto no debe arrojarse junto con otros desperdicios domésticos en ningún lugar de la Unión Europea. Para evitar posibles daños al medio ambiente o a la salud humana debidos a desechos no controlados de desperdicios, recíclelo responsablemente para promover la reutilización sostenible de los recursos materiales. Para devolver su dispositivo usado, utilice los sistemas de devolución recolección, o contacte con el vendedor minorista donde compró el producto. Ellos pueden llevar este producto al reciclado seguro para el medio ambiente.

INTRODUCTION

ENGLISH

Please read this manual thoroughly for correct operation and optimal performance.

PV® 16 Channel Dual Receiver PLL Wireless Receiver Features

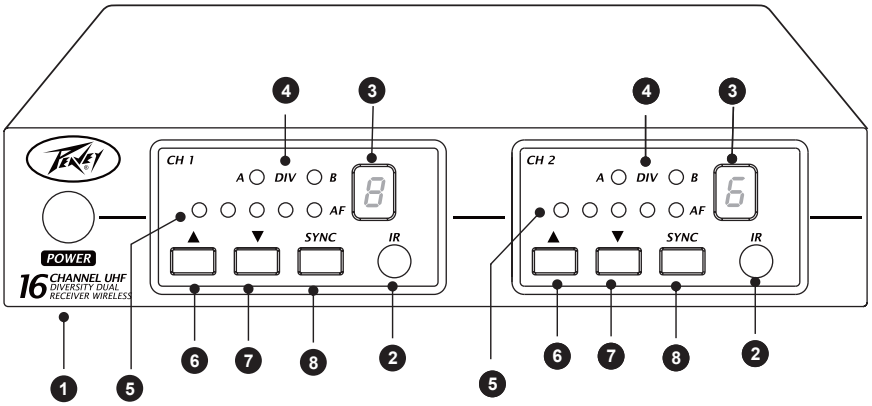

FRONT PANEL

(1) Power switch

(2) Infrared(IR) port: Broadcasts IR signal to transmitter.

(3) Channel indicator: To display system's receiving channel.

(4) DIV indicator: Antenna receiver status indicator LED.

(5) AF1 - AF5 indicator: Indicate the audio signal level.

(6) ▲ UP select button.

(7) ▼ DOWN select button.

(8) SYNC button: Press to synchronize transmitter and receiver frequencies.

NOTE: WHEN ch1 AND Ch2 ARE IN USE TOGETHER, PLEASE DON'T SET THEM ON THE SAME CHANNEL.

PV® 16 Channel Dual Receiver PLL Wireless Receiver Features

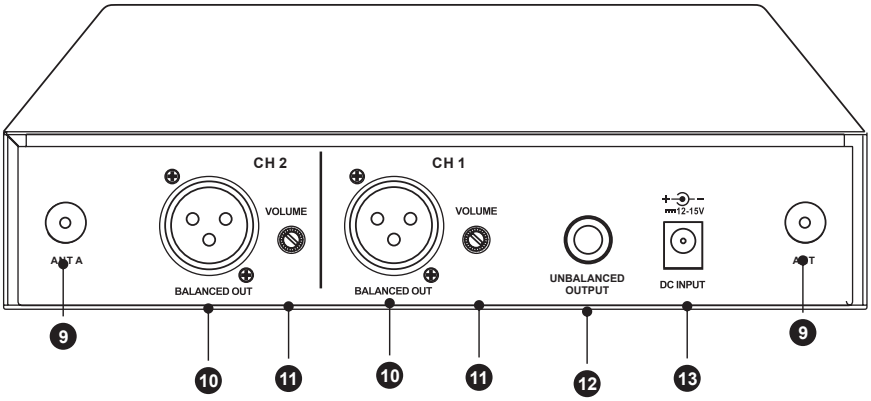

BACK PANEL

(9) Antenna connectors

(10) Balanced out Jack: XLR connector provides balanced audio output signal from this jack to the amplifier.

(11) Volume adjustment knob: Adjusts the volume level of the AUDIO OUT.

(12) Unbalanced out Jack: MIX OUTPUT, with Phone Jack provides audio output signal from this jack to the amplifier.

(13) DC input socket: Input socket for 12-15V Volt DC power. Please note that the polarity of the central pin in the socket is positive(+).

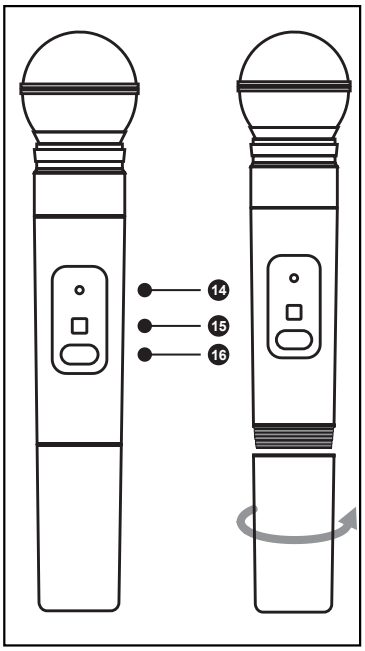

PV® 16 Channel Dual Receiver PLL Handheld Transmitter

(14) Power / IR mute indicator

(15) SYNC port: Receives infrared beam to synchronize frequencies

(16) On-off / mute switch: Press and hold to turn on or off. Press and release to mute or disengage mute function.

Green	*Ready*
Flashing green	*Controls locked*
Amber	*Mute on*
Flashing red	*IR transmitter in process*
Glowing red	*Battery power low*
Pulsing red on startup	*Batteries dead (transmitter cannot be turned on until batteries are changed)*
Pulsing red after synchronization	*Transmitter and receiver are incompatible*

CHANGING BATTERIES

- Expected life for alkaline batteries is approximately 8 hours.
- When the transmitter light glows red, the batteries should be replaced, as shown.

When the Transmitter is not in use:

Make sure the microphone is turned off. If the microphone will not be used for an extended period of time, please remove the batteries to avoid battery leakage that can result in damage to the battery springs and circuit.

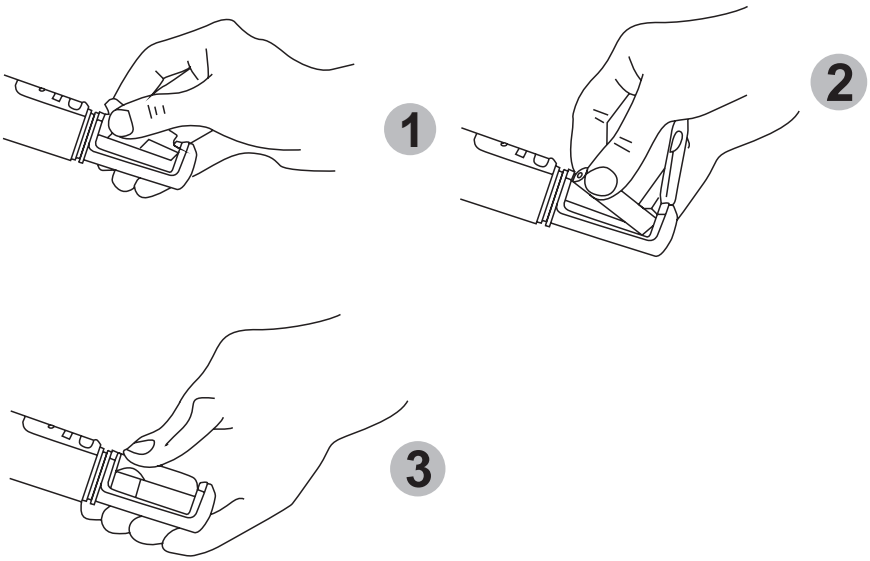

PV® 16 Channel Dual Receiver Body Pack Transmitter

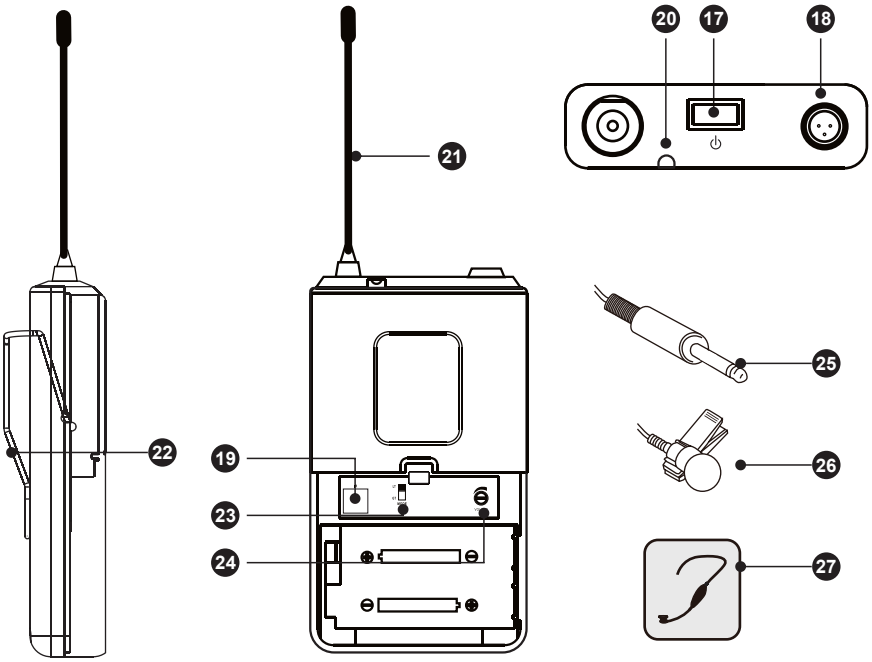

Green	*Ready*
Flashing green	*Controls locked*
Amber	*Mute on*
Flashing red	*IR transmitter in process*
Glowing red	*Battery power low*
Pulsing red on startup	*Batteries dead (transmitter cannot be turned on until batteries are changed)*
Pulsing red after synchronization	*Transmitter and receiver incompatible*

BODYPACK TRANSMITTER

(17) Power / Mute Button

(18) Mic Jack

(19) IR Port

(20) Power / IR / Mute indicator

(21) Transmitter Antenna

(22) Detachable Belt Clip

(23) Mode with LT & GT

(24) Volume Adjustment

(25) Guitar Cable for guitar wireless system

(26) Lavalier Mic for lavalier wireless system

(27) Headphone Microphone for headset wireless system

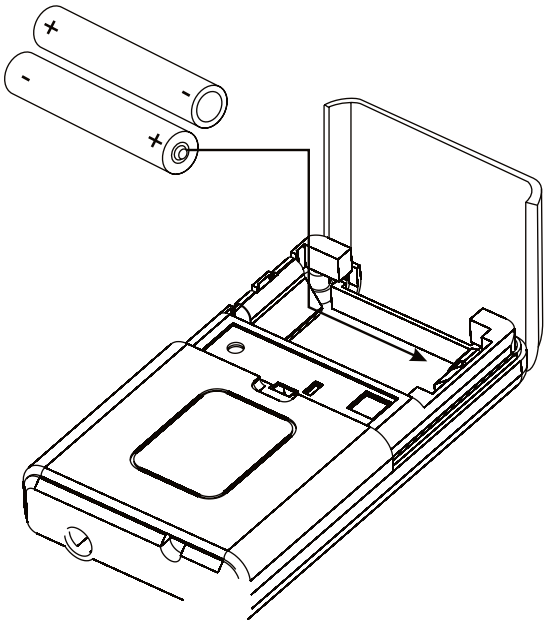

BODYPACK TRANSMITTER

CHANGING BATTERIES

- Expected life for alkaline batteries is approximately 8 hours.
- When the transmitter light glows red, the batteries should be replaced immediately, as shown.

When the Transmitter is not in use:

Make sure the microphone is turned off. If the microphone will not be used for an extended period of time, please remove the batteries to avoid battery leakage that can result in damage to the battery springs and circuit.

PV® 16 Channel Dual Receiver Body Pack Sync Function

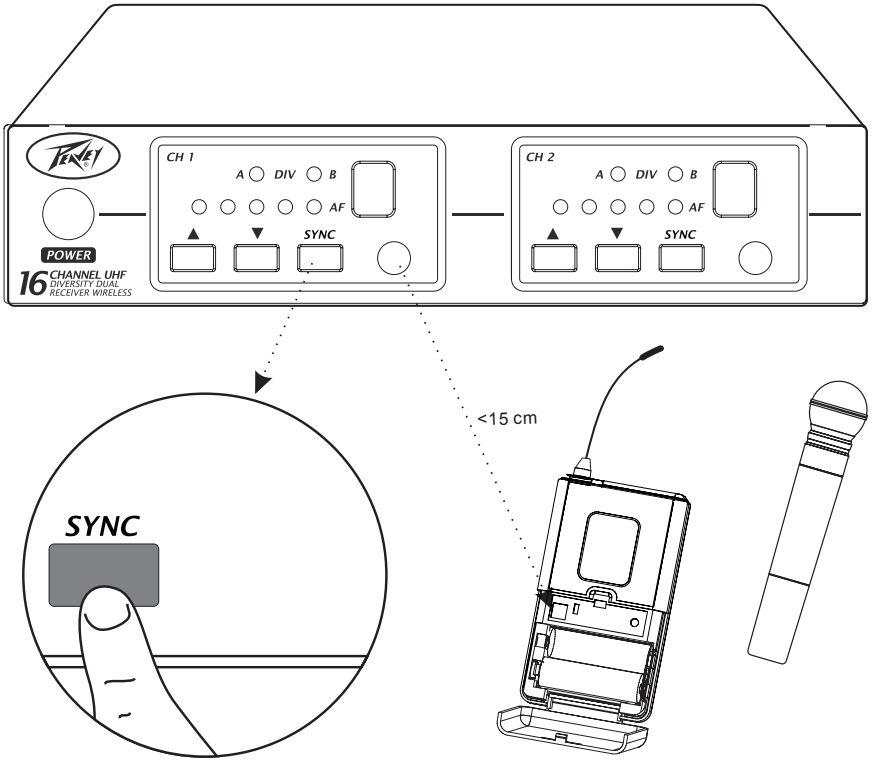

AUTOMATIC TRANSMITTER SETUP

Open the body pack transmitter battery compartment to display the infrared(SYNC) port.

With the transmitter SYNC port exposed to the receiver, press SYNC

When the receiver ready light glows, the system is ready for use. Close the body pack transmitter battery compartment.

SPECIFICATIONS

SYSTEM	**FREQUENCY**	**UHF**
	Audio Frequency Response	Minimum: 50 Hz Maximum: 18 KHz
	+/-3 dB	(Overall system frequency depends on microphone element)
	Total Harmonic Distortion Ref.+/-30 KHz deviation,1 KHz tone	0.8%, typical
	Dynamic Range	>100 dB A-weighted
	Working Range	100 m (300 ft.)
RX	Oscillation Type `	Microprocessor controlled PLL Synthesized
	Receiving Method	Diversity
	Frequency Stability	+/- 0.005%
	No. of Channels	Max 16 (16 Channels)
	Max Deviation	>+/- 45 KHz
	Sensitivity	-105 dBm at S/N ratio >12 dB
	Pilotone Frequency	32.768 KHz
	Image Rejection	>60 dB
	Audio Outputs	Unbalanced: 360 mV / 5 K Balanced: 25 mV / 600
TX	RF Power Output	>30 mV
	Spurious Emission	>60 dB below Carrier
	No. of Channels	Max 16 (16 Channels)
	Pilotone Frequency	32.768 KHz
	Battery	AA type*2
	Battery Life (Alkaline)	Estimated 8 hours

PEAVEY ELECTRONICS CORPORATION LIMITED WARRANTY

Effective Date: 03/04/2010

What This Warranty Covers
Your Peavey Warranty covers defects in material and workmanship in Peavey products purchased and serviced in the U.S.A. and Canada.

What This Warranty Does Not Cover
The Warranty does not cover: (1) damage caused by accident, misuse, abuse, improper installation or operation, rental, product modification or neglect; (2) damage occurring during shipment; (3) damage caused by repair or service performed by persons not authorized by Peavey; (4) products on which the serial number has been altered, defaced or removed; (5) products not purchased from an Authorized Peavey Dealer.

Who This Warranty Protects
This Warranty protects only the original purchaser of the product.

How Long This Warranty Lasts
The Warranty begins on the date of purchase by the original retail purchaser. The duration of the Warranty is as follows:

Product Category	Duration
Guitars/Basses, Amplifiers, Preamplifiers, Mixers, Electronic Crossovers and Equalizers	2 years *(+ 3 years)
Drums	2 years *(+ 1 year)
Enclosures	3 years *(+ 2 years)
Digital Effect Devices and Keyboards and MIDI Controllers	1 years *(+ 1 year)
Microphones	2 years
Speaker Components (incl. Speakers, Baskets, Drivers, Diaphragm Replacement Kits and Passive Crossovers)	1 year
Tubes and Meters	90 Days
Cables	Limited Lifetime
Rockmaster Series, Strum'n Fun, Vectra, Rotor, OCC Stage pack, GT & BT Series amps, Retro Fire, Metal Maker and Iron Wing	1 year

[Denotes additional Warranty period applicable if optional Warranty Registration Card is completed and returned to Peavey by original retail purchaser within 90 days of purchase.]*

What Peavey Will Do
We will repair or replace (at Peavey's discretion) products covered by Warranty at no charge for labor or materials. If the product or component must be shipped to Peavey for Warranty service, the consumer must pay initial shipping charges. If the repairs are covered by Warranty, Peavey will pay the return shipping charges.

How To Get Warranty Service
(1) Take the defective item and your sales receipt or other proof of date of purchase to your Authorized Peavey Dealer or Authorized Peavey Service Center.
OR
(2) Ship the defective item, prepaid, to Peavey Electronics Corporation, International Service Center, 412 Highway 11 & 80 East, Meridian, MS 39301. Include a detailed description of the problem, together with a copy of your sales receipt or other proof of date of purchase as evidence of Warranty coverage. Also provide a complete return address.

Limitation of Implied Warranties
ANY IMPLIED WARRANTIES, INCLUDING WARRANTIES OF MERCHANTABILITY AND FITNESS FOR A PARTICULAR PURPOSE, ARE LIMITED IN DURATION TO THE LENGTH OF THIS WARRANTY.
Some states do not allow limitations on how long an implied Warranty lasts, so the above limitation may not apply to you.

Exclusions of Damages
PEAVEY'S LIABILITY FOR ANY DEFECTIVE PRODUCT IS LIMITED TO THE REPAIR OR REPLACEMENT OF THE PRODUCT, AT PEAVEY'S OPTION. IF WE ELECT TO REPLACE THE PRODUCT, THE REPLACEMENT MAY BE A RECONDITIONED UNIT. PEAVEY SHALL NOT BE LIABLE FOR DAMAGES BASED ON INCONVENIENCE, LOSS OF USE, LOST PROFITS, LOST SAVINGS, DAMAGE TO ANY OTHER EQUIPMENT OR OTHER ITEMS AT THE SITE OF USE, OR ANY OTHER DAMAGES WHETHER INCIDENTAL, CONSEQUENTIAL OR OTHERWISE, EVEN IF PEAVEY HAS BEEN ADVISED OF THE POSSIBILITY OF SUCH DAMAGES.
Some states do not allow the exclusion or limitation of incidental or consequential damages, so the above limitation may not apply to you.

This Warranty gives you specific legal rights, and you may also have other rights which vary from state to state.

If you have any questions about this Warranty or services received or if you need assistance in locating an Authorized Service Center, please contact the Peavey International Service Center at (601) 483-5365.

Features and specifications are subject to change without notice.

Logo referenced in Directive 2002/96/EC Annex IV (OJ(L)37/38,13.02.03 and defined in EN 50419: 2005
The bar is the symbol for marking of new waste and is applied only to equipment manufactured after 13 August 2005

Features and specifications are subject to change without notice.

Peavey Electronics Corporation • 5022 Hartley Peavey Drive • Meridian • MS • 39305
(601) 483-5365 • FAX (601) 486-1278 • www.peavey.com • ©2013 • EX000172