FlexZone™

Instruction sheet #6

G6DA0603-001, Rev A
December 15, 2015

Wireless Gate Sensor

Description

The Wireless Gate Sensor (WGS) operates in conjunction with the FlexZone processor to provide RF-based wireless security protection for gates. The WGS is comprised of two components. The wireless gate sensor module (GSM) a high-sensitivity accelerometer, is attached to the protected gate. The GSM analyzes signals picked up from the fence fabric on the gate and will transmit an alarm when it detects vibration, motion, or positional changes. A wireless gate sensor receiver (GSR) that is mounted on the FlexZone processor receives the transmission and passes on the alarm signal to the FlexZone processor. Alarm data communications are via the FlexZone processor over the Silver Network or by contact closures.

Note	Setup and operation of the WGS requires as a minimum, Network Manager version 2.20, UCM version 1.37 and FlexZone version 2.4 software.

Figure 1 FlexZone Wireless Gate Sensor Module (solar powered)

Features

- 300 m (984 ft.) (nominal) transmission range with the supplied rubber whip antenna (requires direct line of sight)
- secure RF transmissions via 128-bit encryption
- supervised comm-link (heartbeat monitor, 2 missed transmissions = supervision alarm)

- three selectable GSM supervision modes which are based on the position and orientation of the gate sensor module
- supervised input for auxiliary device alarm reporting (e.g., magnetic contact)
- solar powered - requires 2 hrs indirect sunlight per day (nominal)
  5 days run time with no light (from fully charged)
- 1 year (nominal) runtime using alkaline D-cell battery; 2+ years using lithium D-cell battery
- low power notification transmitted at 25% capacity (solar) 10% capacity (D-cell battery)
- emergency backup battery - 30 days run time (nominal)
- user-configurable detection parameters and target filters
- up to 4 GSMs can report to one receiver
- each receiver provides 8 distinct channels (up to 32 GSMs per site - requires 8 FlexZone processors)

Specifications

- power consumption: GSM 3 mW (avg) GSR 0.5 W
- operating voltage: solar / 1.5 V alkaline D-cell battery* OR 3.6 V lithium D-cell battery*
  * battery type and voltage user selectable via shunt on T8 (see Figure 10)
- detection frequency response: 0.1 to 400 Hz
- transmission range: 300 m (984 ft.) (nominal) requires direct unobstructed line of site
- coverage area: 1 to 5 gate panels depending on the height, width, type, and quality of the gate

Note	The number of GSMs required to protect a gate varies with the type and size of the gate being protected. To determine the required number of GSMs, install one in a central position and test the gate. If the coverage is inadequate, install two GSMs at a central height and at 1/3 and 2/3 of the width and test the gate. Continue this process until your detection requirements are met (maximum of 4 GSMs per gate).

Compliance

Canada: Industry Canada Identification Number: Gate Sensor Module 1454B-E7EM0201; Gate Sensor Receiver 1454B-E7BA0300

This device complies with Industry Canada license-exempt RSS standard(s). Operation is subject to the following two conditions: (1) This device may not cause harmful interference, and (2) this device must accept any interference received, including interference that may cause undesired operation.

Ce dispositif est conforme aux normes CNR d'Industrie Canada applicables aux appareils radio exempts de licence. Son fonctionnement est sujet aux deux conditions suivantes : 1) le dispositif ne doit pas produire de brouillage préjudiciable; et 2) il doit accepter tout brouillage reçu, y compris un brouillage susceptible de provoquer un fonctionnement indésirable.

USA: FCC Identification Number: Gate Sensor Module 15T-E7EM0201; Gate Sensor Receiver 15T-E7BA0300

Changes or modifications not expressly approved by Senstar Corporation could void the user's authority to operate the equipment.

FCC Certification - This device complies with part 15 of the FCC Rules. Operation is subject to the following two conditions: (1) This device may not cause harmful interference, and (2) this device must accept any interference received, including interference that may cause undesired operation.

This equipment has been tested and found to comply with the limits for a Class B digital device, pursuant to Part 15 of the FCC Rules. These limits are designed to provide reasonable protection against harmful interference in a residential installation. This equipment generates, uses and can radiate radio frequency energy and, if not installed and used in accordance with the instructions, may cause harmful interference to radio communications. However, there is no guarantee that interference will not occur in a particular installation. If this equipment does cause harmful interference to radio or television reception, which can be

determined by turning the equipment off and on, the user is encouraged to try to correct the interference by one or more of the following measures:

- Reorient or relocate the receiving antenna.
- Increase the separation between the equipment and receiver.
- Connect the equipment into an outlet on a circuit different from that to which the receiver is connected.
- Consult the dealer or an experienced radio/TV technician for help.

Europe:
This device complies with ETSI standard EN 300 440 for European operation.
The use of shielded cables is required for compliance.

CE

Installation

The FlexZone Wireless Gate Sensor requires the installation of three devices, a FlexZone processor, a GSR, and a GSM. In addition, the GSM includes the option of connecting an auxiliary security device like a magnetic contact as an aid for supervision and alarm reporting. The FlexZone processor serves as the WGS base station. The FlexZone Product Guide (G6DA0102) includes the installation details for the FlexZone processor.

Installation overview

1. Install the GSR on the FlexZone processor.
2. Install the whip antenna on the FlexZone processor.
3. Install the FlexZone processor.
4. Install the gate sensor module. (If a gate contact is being used in conjunction with the GSM, install and connect the gate contact.)

Mounting the gate sensor receiver

The GSR mounts onto the expansion header (T2) on the FlexZone processor, either by piggy-backing onto the network interface card (NIC) or directly onto the header if the processor does not include an NIC. The FlexZone processor powers and communicates with the receiver through the expansion header. Figure 2 illustrates the LED indicators and the antenna connection for the GSR.

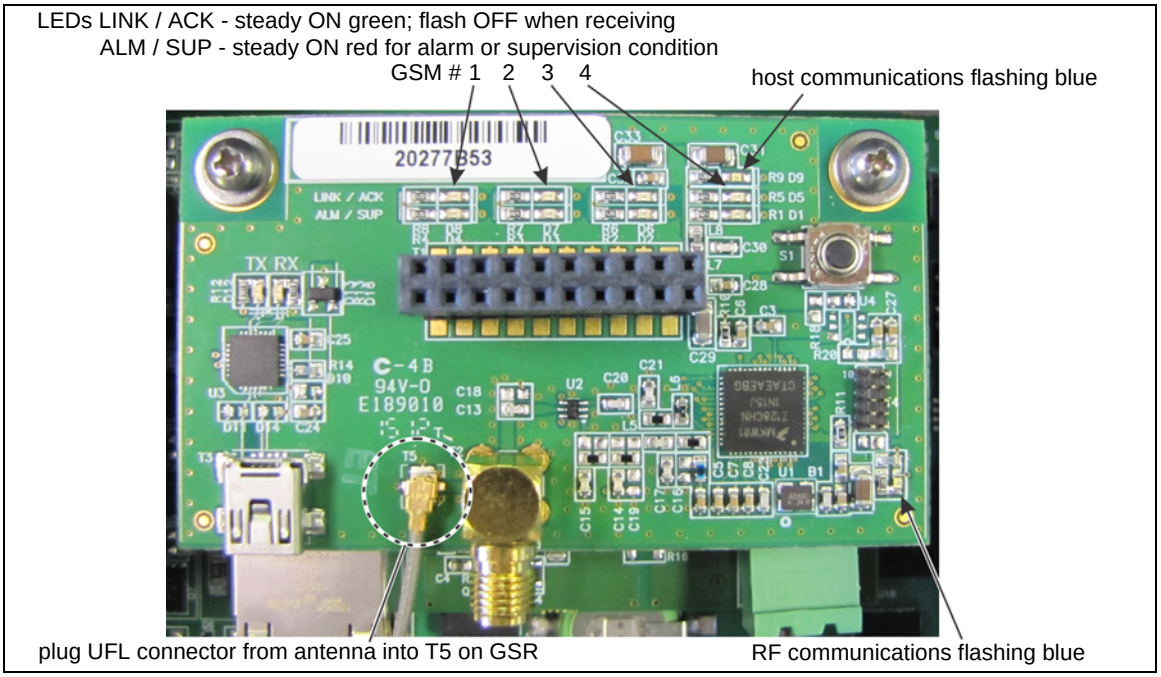

Figure 2 GSR LEDs & antenna connection

CAUTION	The FlexZone processor, network interface card and receiver all contain static sensitive components. Follow proper ESD handling procedures when working on the cards. Disconnect all sources of power to the FlexZone processor before installing the receiver.

Installing the receiver on the FlexZone processor

1. Remove and retain the mounting hardware from the 2 standoffs on the FlexZone processor (flat washer, lock washer, machine screw).
2. Align the 20-pin header on the bottom of the receiver with the expansion header on the FlexZone processor and align the 2 mounting holes on the receiver with the 2 standoffs. Carefully, insert the receiver into the expansion header. Use the retained mounting hardware to secure the receiver to the FlexZone processor.
3. Connect the antenna to the receiver (see Figure 2).

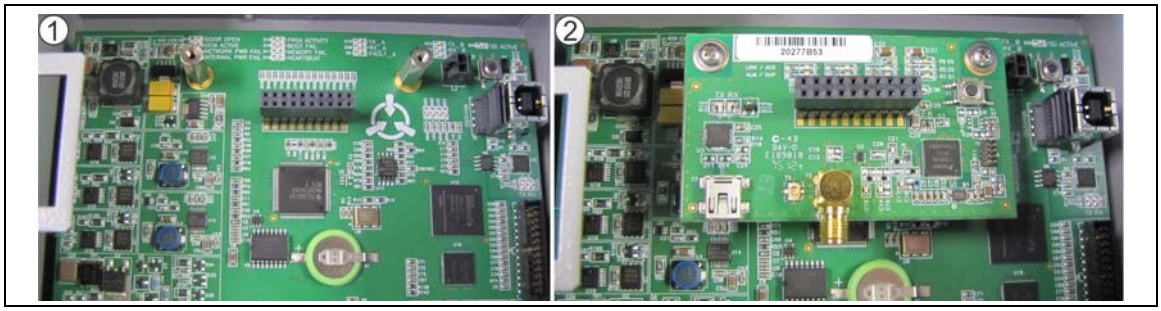

Figure 3 Mounting the receiver on the FlexZone processor

Installing the receiver on an NIC

1. Remove and retain the mounting hardware securing the NIC to the processor (flat washer, lock washer, machine screw).
2. Secure the NIC to the FlexZone processor with the 2 supplied standoffs.
3. Align the 20-pin header on the bottom of the receiver with the expansion header on the NIC and align the 2 mounting holes on the receiver with the 2 standoffs on the NIC. Carefully, insert the receiver into the expansion header. Use the retained mounting hardware to secure the receiver to the NIC.
4. Connect the antenna to the receiver (see Figure 2).

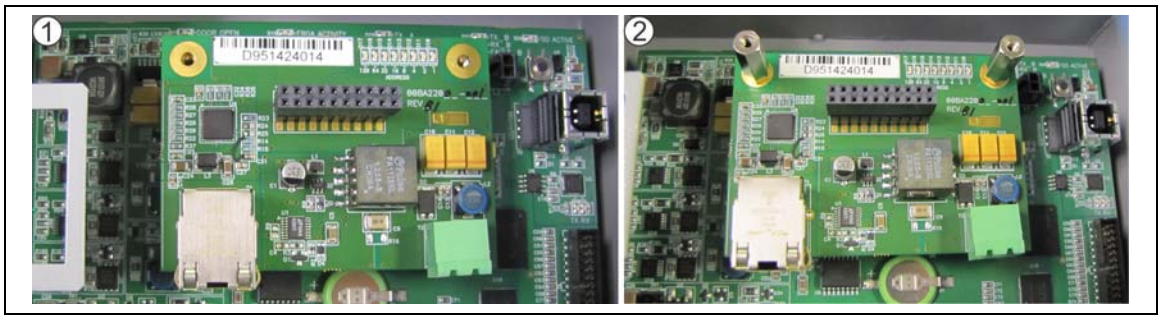

Figure 4 Mounting the receiver on the NIC (steps 1 & 2)

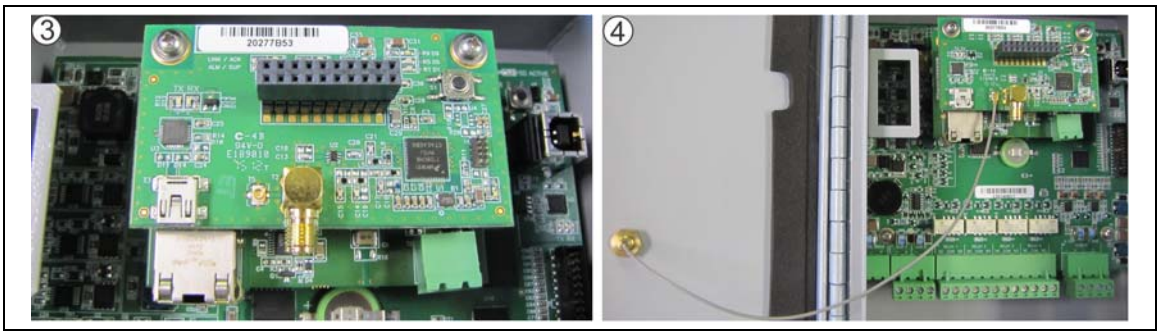

Figure 5 Mounting the receiver on the NIC (steps 3 & 4)

Antenna mounting

The supplied whip antenna is sensitive in the 360º horizontal plane, but has low sensitivity above and below the antenna. The recommended installation location is centered on the FlexZone processor enclosure door. The enclosure door provides the largest ground plane, which improves the antenna's sensitivity. Enclosure door mounting provides good sensitivity in both directions down the fence line. Figure 6 is a cross sectional representation of the antenna pattern for the supplied whip antenna.

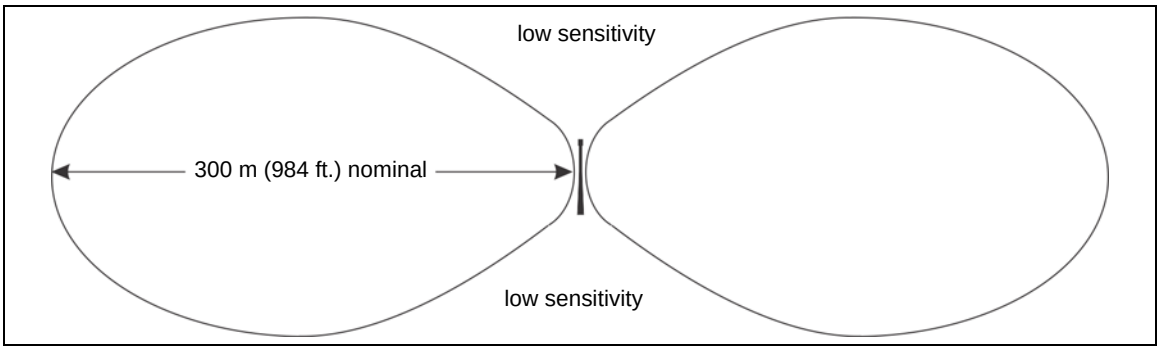

Figure 6 Cross sectional antenna coverage pattern

It is also possible to mount the rubber whip antenna on the top of the enclosure. However, top mounting generally results in a reduced maximum range along the fence line due to the smaller ground plane. However, mounting the antenna on top of the enclosure provides omni-directional coverage.

Note	To mount the antenna on the enclosure door or on the top of the enclosure, drill a 6.3 mm (1/4 in.) hole in the center of the mounting surface.

Note	For top enclosure mounting, remove the processor circuit card from the enclosure before drilling the mounting hole.

Note	The rubber whip antenna provides a good seal when the nut is securely tightened on the inside of the enclosure. However, a thin bead of outdoor rated silicone can be added around the base of the antenna to provide additional protection against water ingress.

1. Locate the center of the selected mounting surface and mark the position of the mounting hole at that point.

2. For door mounting, open the enclosure door, lay the processor flat on the open side, and drill from the outside of the door.
   For top mounting, remove the processor circuit card from the enclosure and drill the mounting hole in the center of the top of the enclosure.
3. Carefully remove all metal shavings from the enclosure.
4. Remove the locking nut from the base of the antenna and pass the wire through the drilled hole (add a bead of silicone around the base of the antenna if desired).
5. Feed the antenna wire through the locking nut and securely tighten the nut inside the enclosure.
6. Connect the UFL connector on the antenna wire to T5 on the receiver (see Figure 2).

FlexZone processor

The FlexZone processor must be within 300 m (984 ft.) and have an unobstructed line of sight to each of its reporting GSMs (up to 4). Figure 7 shows a fence-mounted FlexZone processor with a rubber whip antenna mounted on the enclosure door.

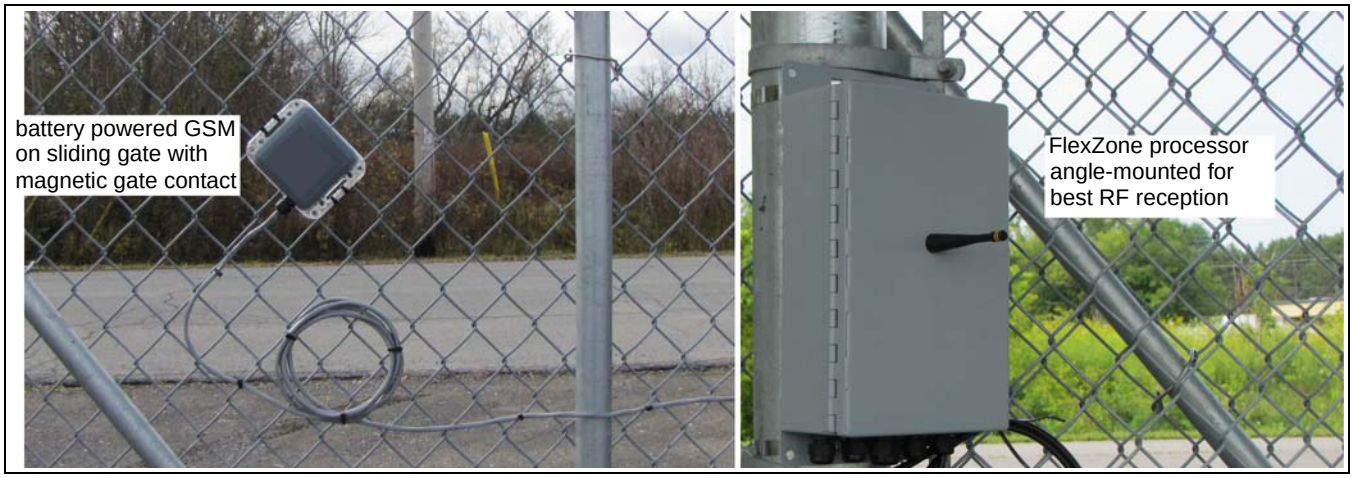

Figure 7 Angle-mounted FlexZone processor and gate sensor module

Mounting the gate sensor module

The GSM is designed to be attached directly to the fence fabric on a gate with UV-resistant polypropylene cable ties (supplied). For increased security, the GSM can also be attached with stainless steel cable ties (see Figure 1).

Note	When attaching the GSM, ensure that the auxiliary input cable port is oriented toward the ground.

Using an auxiliary security device (gate contact) with the GSM

The GSM includes a cable entry port fitted with a sealed cable gland for connecting a magnetic contact or other 2 wire security device to the GSM. The status of the auxiliary security device is reported to the host FlexZone processor by the GSM. The FlexZone processor passes the status information to the security management system over the Silver Network or via contact closures. The WGS can be configured to suppress GSM sensor and/or supervision alarms when the FlexZone Aux input is in alarm (i.e., when the gate is open). A FlexZone splice kit is available for making the connection between the auxiliary device and the GSM.

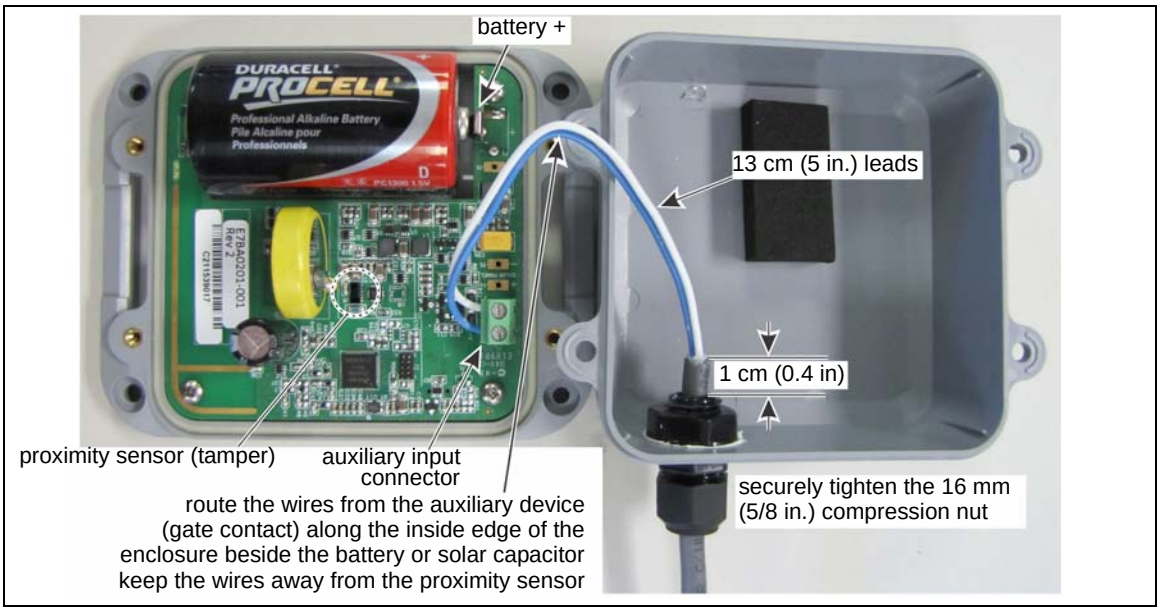

Figure 8 Connecting the auxiliary device to the GSM

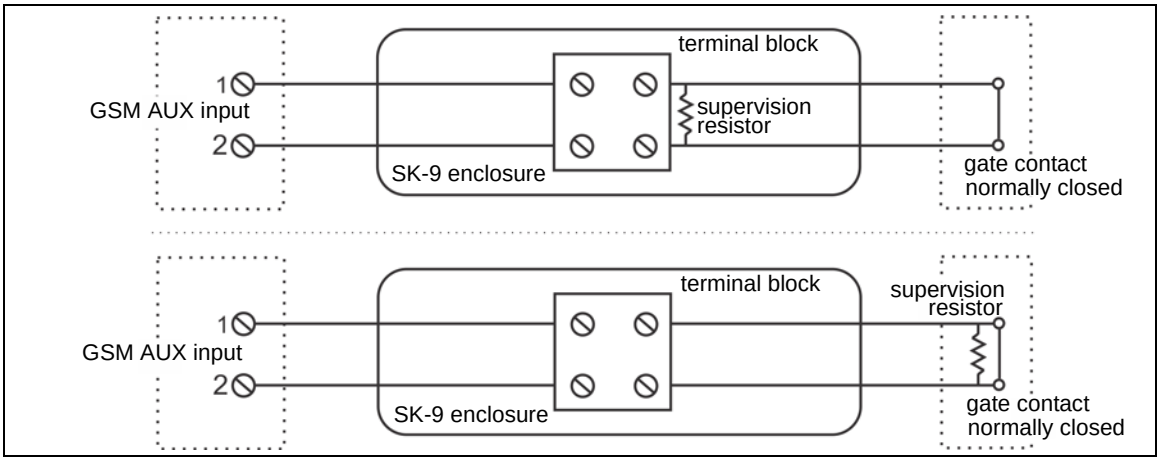

Figure 9 Auxiliary device wiring examples

Connecting the auxiliary device to the GSM

Note	The contact closure input to the GSM MUST be voltage free.

Note	The GSM cable gland accepts cables with an OD of 2.9 to 6.4 mm (0.115 to 0.25 in.). The auxiliary input connector on the GSM accepts wire sizes between 16 and 26 AWG with a 1/4 in. strip (1.3 mm^2 to 0.13 mm^2 with a 6 mm strip).

1. Begin by installing the gate contact according to the manufacturers' directions.

Note	If the supervision resistor is installed inside the SK9 enclosure, the SK9 should be mounted as close to the gate contact as possible.

2. Follow the instructions provided with the splice kit to connect the cable from the gate contact to the cable leading to the GSM.
3. Attach the cable to the fence with UV resistant cable ties.

Note	Install the SK9 enclosure 15 cm (6 in.) above the cable to provide drip loops.

Note	If there is a chance that the GSM will be relocated to another position on the gate at a later time, create a service loop with sufficient cable near the GSM.

4. At the mounting location for the GSM, remove 13 cm (5 in.) of the outer jacket.
5. Remove 6 mm (1/4 in.) of insulation from the end of each wire.
6. Remove and retain the 4 screws from the GSM.
7. Remove the compression nut from the cable gland fitting and pass the cable through the nut and into the enclosure so that the two leads plus 1 cm (0.4 in.) of outer jacket are inside the GSM.
8. Route the two leads along the inside edge of the GSM. Fold the two leads back so the battery or solar capacitor holds them toward the side of the enclosure and away from the proximity sensor (see Figure 8).
9. Connect the two leads to the auxiliary input connector on the GSM.
10. Ensure the wire leads are properly dressed (away from the proximity sensor) and cannot be pinched by the enclosure cover and reinstall the 4 screws.

CAUTION	The GSM requires that all 4 screws (# 6 X 32 X 3/8 in.) be installed and securely tightened to prevent water ingress into the device. If a screw is lost, it must be replaced.

Selecting the GSM battery type

For GSMs using D-cell batteries, set the shunt on T8 for the specific type and voltage of the battery being used (see Figure 10). The solar powered GSM does not include the T8 header.

- for a 1.5 V alkaline battery place the shunt on T8 pins 1 and 2
- for a 3.6 V lithium battery place the shunt on T8 pins 2 and 3

Note	The lithium type D-cell battery should be used at sites which experience periods of extremely cold (or hot) temperatures. The lithium type battery will provide more than double the operational lifetime of the alkaline type battery in normal use.

Replacing the GSM battery

The GSM will transmit a low battery notification when the battery is down to 10% capacity. The GSM can usually continue to operate for over a month after the low battery notification. However, other factors such as temperature also affect the battery life. Senstar recommends that the battery be replaced within one week of the low battery notification (see Figure 8).

CAUTION	If the GSM includes an auxiliary device connection, use care when removing the cover from the GSM to ensure that no pulling force is applied to the auxiliary input connector (13 cm lead).

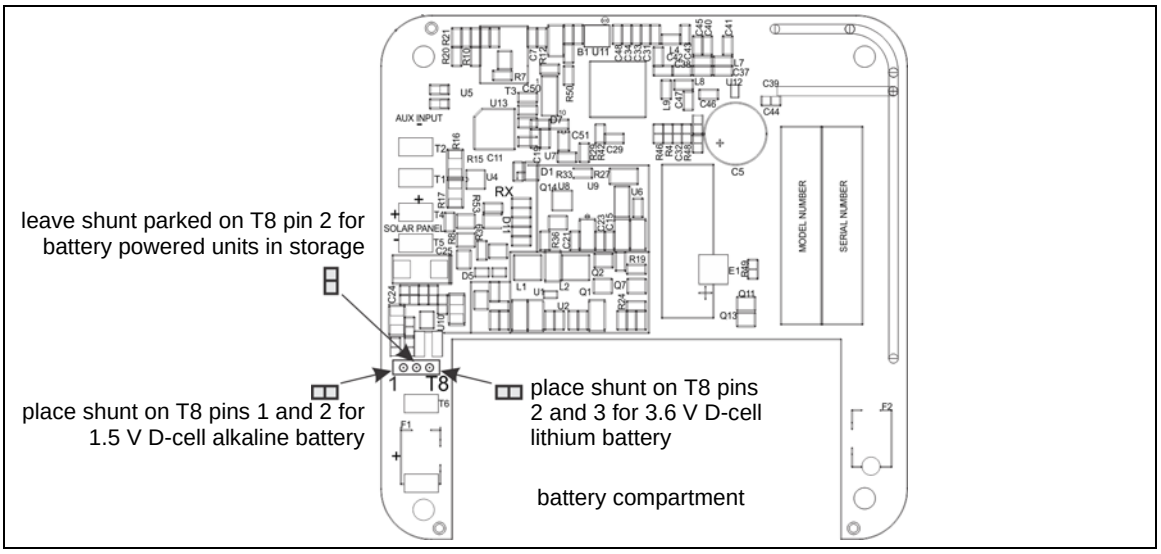

Figure 10 Setting the battery selection shunt on the GSM

Gate sensor module supervision

There are 3 selectable modes for GSM supervision:

Note	When used in conjunction with a magnetic contact, each supervision Mode will ignore all motion when the GSM's auxiliary input is active (i.e., gate contact open).

- Mode 1: swinging gates - GSM ignores horizontal motion (front to back) in the Z axis - any other motion triggers supervision alarm
- Mode 2: vertical pivot lift-gates - GSM ignores rotational motion (up and down) in both the X & Y axis - any other motion triggers supervision alarm
- Mode 3: sliding gates - any motion triggers supervision alarm

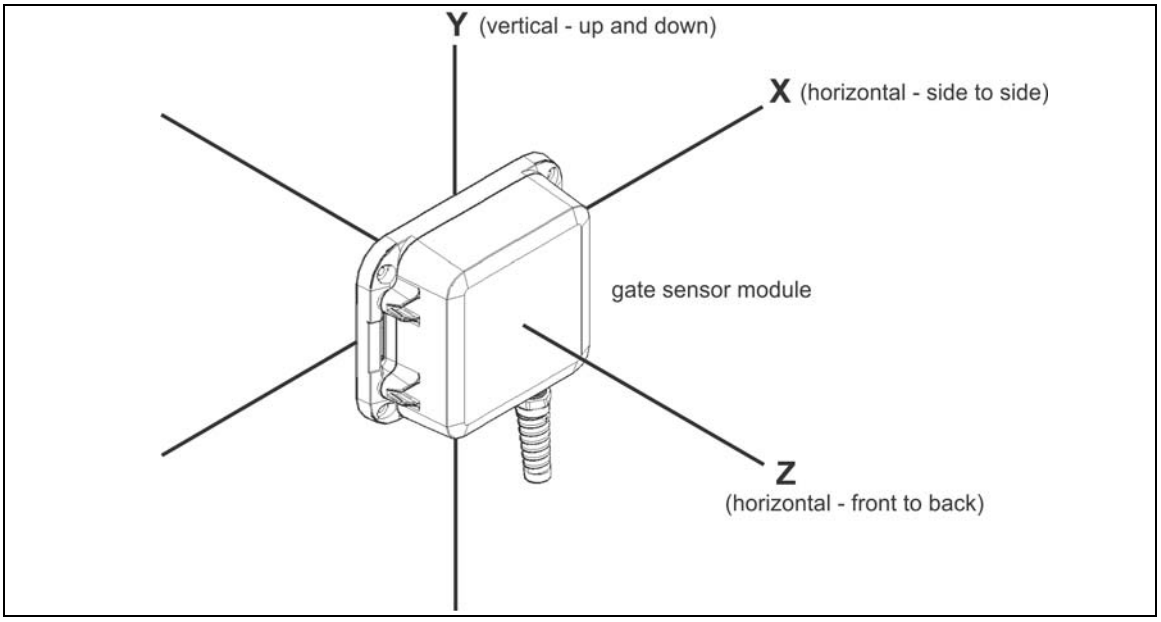

Figure 11 Supervision mode concept drawing

WGS Configuration

Note	Consult the online help for detailed information on UCM operation. Refer to the FlexZone Product Guide for additional information on configuring the FlexZone processor.

The Universal Configuration Module (UCM) is a Windows based software application, which serves as the calibration, setup and maintenance tool for the FlexZone sensor system and the Wireless Gate Sensor. The UCM communicates with the FlexZone processor locally through a USB connection, or remotely via the Silver Network Manager. The UCM communicates with the WGS through the FlexZone processor. When you start the UCM, a window displays that enables you to specify the device to which you are connecting.

Tip	Save UCM files with a meaningful name, which includes the time and date. The files can then be reopened at a later time (Work Offline).

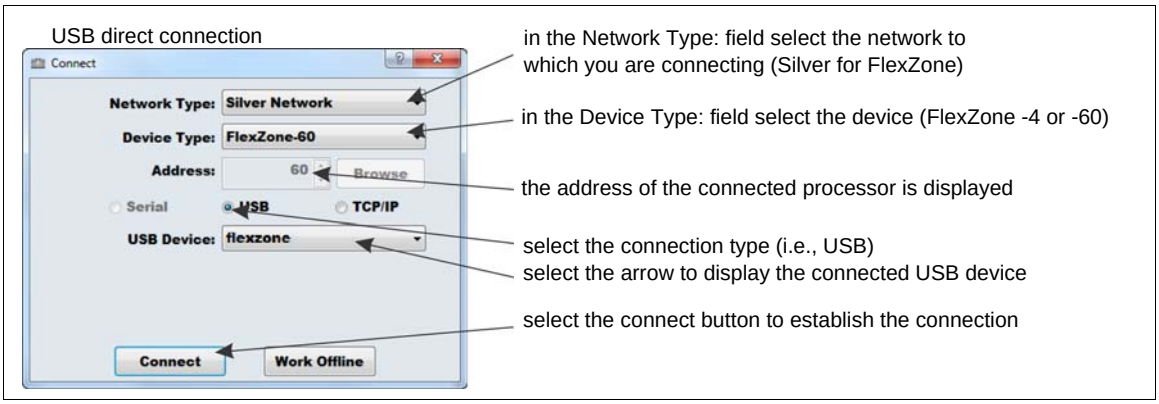

Figure 12: Connecting the UCM (via USB)

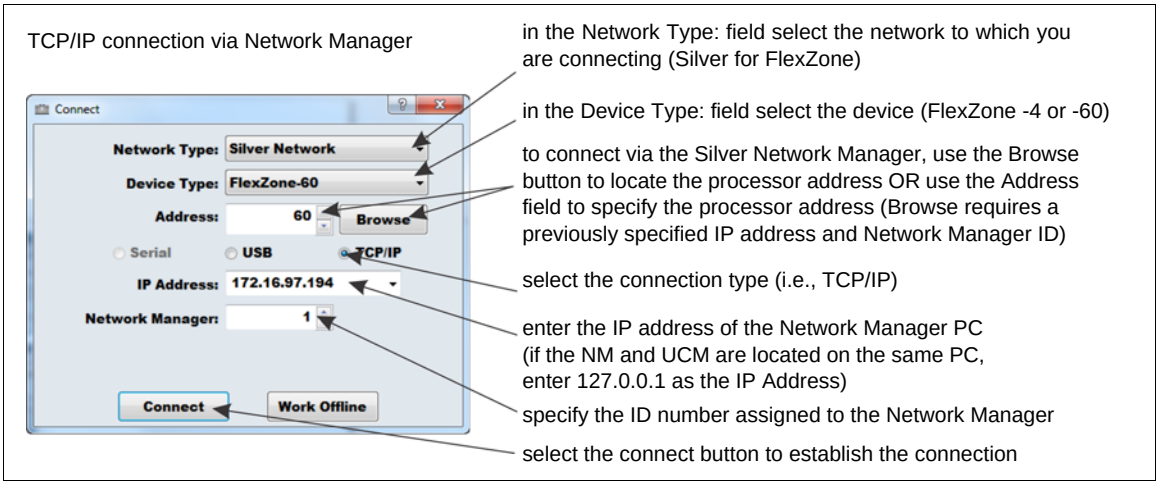

Figure 13: Connecting the UCM (via TCP/IP

When the UCM connection is made, the FlexZone status window displays. Select the GSM Cfig tab to display the GSM configuration parameters. Figure 14: shows the GSM Cfig window and the following table includes descriptions of the configuration settings.

Wireless gate sensor configuration parameters		
UCM Parameter	**Parameter description**	**Default**
Common Settings		
Enable	Select (check) the Enable checkbox if the FlexZone includes a WGS.	Off
Locale	Specify the Locale where the WGS will operate FCC = North America; ETSI = Europe.	FCC
RF Channel	Specify the RF channel this receiver will use to communicate with its gate sensor modules. Each receiver at a site must use a distinct channel to communicate with its GSMs to prevent interference (1 - 8 channels).	1
Receiver Fail	Specify a relay that will activate to signal a receiver fail condition (Local control mode or NM Mode).	
GSM selection tabs	Select a tab (1 - 4) to setup and configure each GSM that reports to this FlexZone processor. The settings apply only to the selected GSM.	
Gate Module Serial Number	Enter the last 8-digits of the gate sensor module's serial number to enable communications between the receiver and the GSM.	
Gate Configuration		
Target Filters	There are 2 filters for adjusting the frequency response of the GSM. The high pass filter can be set to 0.1, 0.5, 1, 2, 4, or 8 Hz. The low pass filter can be set to 400, 80, 40, 25, 12, 8, or 4 Hz. The 2 filter settings cannot overlap. The high pass filter is used to screen out low frequency vibrations such as the fence motion caused by wind and loose fence fabric. The low pass filter is used to screen out high frequency vibrations.	HPF - 2 Hz LPF - 400 Hz
Event Threshold	The received signal strength (1 - 255) at which an event is added to the Event Count (Event = disturbance).	25
Event Window (sec)	Sets the time period (0.5 - 10) after an Event is recorded before the next Event can be recorded. Used to prevent vibrations from a single Event from being recorded as subsequent Events.	1 sec
Event Count	The number of Events (1 - 10) that must occur to trigger an alarm.	3
Alarm Window (sec)	Sets the time period (1 - 99) after the first Event is recorded in which the specified number of Events must occur to trigger an alarm. If the Alarm Window time setting lapses before the Event Count is reached, the Event Count resets to 0.	30 sec
Alarm Hold	The time period (1 - 10) after an alarm is signaled before a subsequent alarm can begin to accumulate.	3 sec
Supervision Mode	Sets the gate sensor module's supervision mode (1 - 3) based on the type of gate being monitored (see Gate sensor module supervision on page 9).	3
Local Bypass		
Alarm	When an auxiliary security device (e.g., magnetic contact) is used in conjunction with the GSM, a GSM alarm will not be reported when the Aux Input is active (i.e., the gate is open).	No
Supervision	When an auxiliary security device is used in conjunction with the GSM, a GSM supervision condition will not be reported when the Aux Input is active.	No
Control Activation		
Alarm	Specify a relay that will activate to signal a GSM alarm condition (Local control mode or NM Mode).	
Supervision	Specify a relay that will activate to signal a GSM supervision condition (Local control mode or NM Mode).	
Diagnostic Fault	Specify a relay that will activate to signal a GSM diagnostic fault condition (Local control mode or NM Mode).	

Auxiliary Input Configuration		
Supervision	Specify the resistor supervision scheme used with the auxiliary security device.	
Resistor 1	Specify the value of supervision resistor R1.	5k1
Resistor 2	Specify the value of supervision resistor R2 (available when dual resistor supervision is selected).	
Noise Tolerance	Used to compensate for noisy input wiring (0, 20, 40, 60, 80, 100 mV) when using single/dual resistor supervision on the auxiliary input. Set this parameter in conjunction with the Filter Window setting to reduce FAR/NAR.	40
Line Drop	Used to compensate for the voltage drop on long or high resistance input wiring (0, 20, 40, 60 mV) available with single/dual resistor supervision.	0
Filter Window (msec)	Specifies the time for which an input must remain active before an event is declared (0 to 2.5 s in 125 ms increments). Adjust the Filter Window in conjunction with the Noise Tolerance to reduce FAR/NAR.	250 msec
Control Activation		
Alarm	Specify a relay that will activate to signal an Auxiliary Input alarm condition (Local control mode or NM Mode).	
Supervision	Specify a relay that will activate to signal an Auxiliary Input supervision condition (Local control mode or NM Mode).	

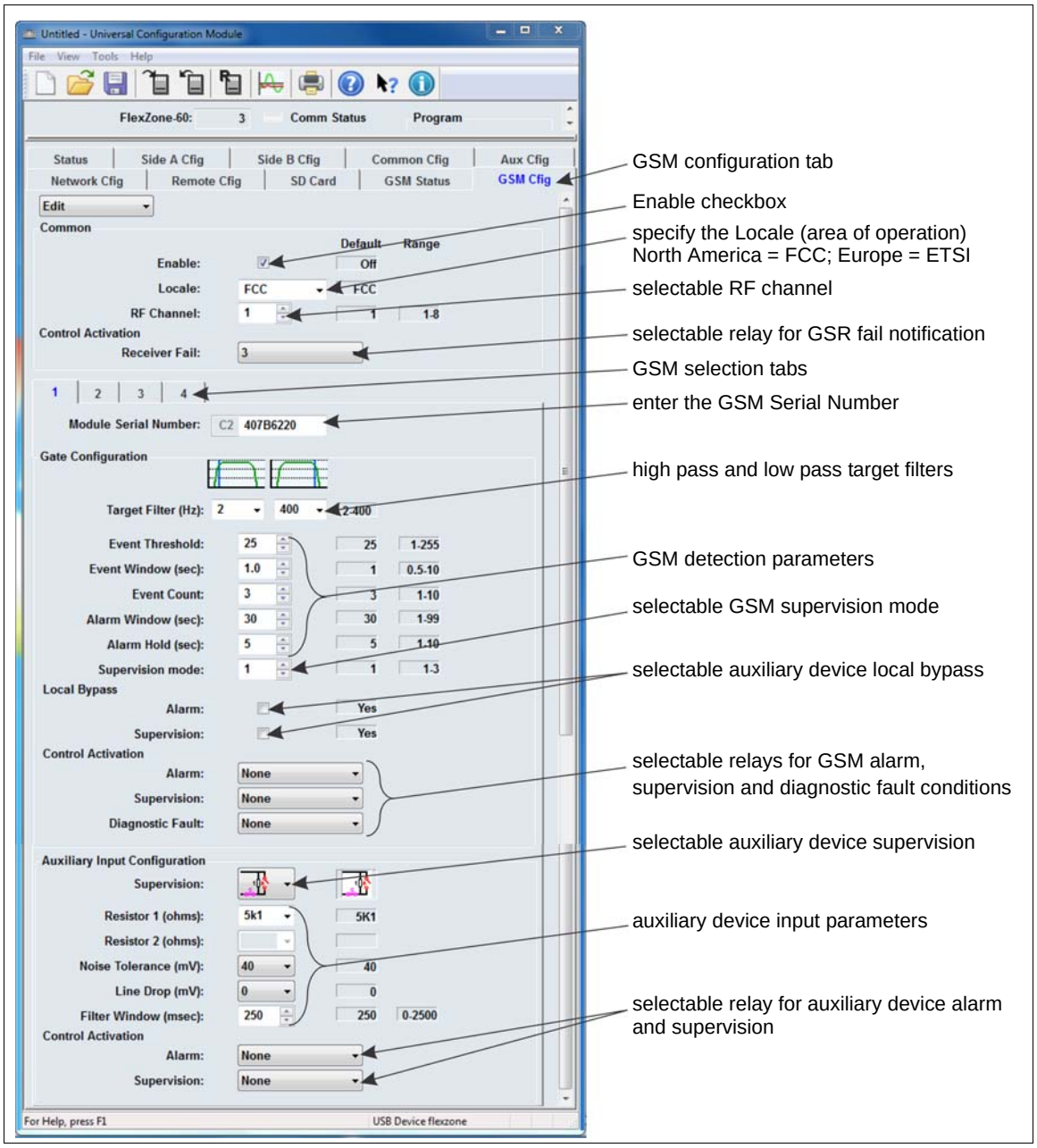

Figure 14: GSM configuration window

The following procedures assume that the FlexZone processor, the GSR and the GSM are installed and operational, and that the FlexZone processor is configured.

- Ensure that the GSM is powered up (i.e., new battery installed, or at least 2 hours of sunlight exposure for solar powered unit).
- Once the GSM serial number is entered via the UCM and downloaded to the FlexZone processor, it generally takes about 2 minutes for the GSM/GSR pairing process to complete.
- It is possible that an interference alarm may be generated when reassigning GSM serial numbers, or when setting up a network. If the interference alarm persists, select a different RF channel.

Gate sensor module setup

1. Connect the UCM to the FlexZone processor.

2. Select the GSM cfig tab.
3. Select (check) the Enable checkbox.
4. Specify the Locale (where the microwave will operate) FCC = North America; ETSI = Europe.
5. If there is more than one FlexZone processor communicating with wireless gate sensors at this location, specify the RF channel for this processor.
6. If Local control mode or Network Manager mode alarm reporting is being used for this processor, specify a relay to be activated if the receiver module fails (if desired).
   If Remote control mode is being used for this processor, refer to the Network Manager online help and the Network Manager Interface application note (00DA0209) for details on configuring NM alarm reporting via the Silver Network.
7. Select a GSM configuration tab.
8. Enter the GSM's serial number.

Note	Senstar recommends leaving the target filters and the GSM's detection parameters at the default settings for the calibration procedure. Adjust the Target Filters only if you are experiencing an unacceptable NAR.

9. Specify the GSM's Supervision Mode.
10. If Local control mode or Network Manager mode alarm reporting is being used for this processor, specify a relay to be activated to report a GSM sensor alarm, a GSM supervision condition and a GSM Fault condition.
11. Download the configuration changes to the processor.

If the GSM will operate in conjunction with an auxiliary security device, configure the Local Bypass settings.

1. Select the Alarm checkbox to mask GSM sensor alarms, select the Supervision checkbox to mask GSM supervision alarms when the auxiliary security device is active (in alarm).
2. Specify the supervision scheme for the auxiliary input.
3. Specify the supervision resistor value(s).
4. Adjust the auxiliary input Noise Tolerance, Line Drop and Filter Window parameters, if required.
5. If Local control mode or Network Manager mode alarm reporting is being used for this processor, specify a relay to be activated to report an auxiliary input Alarm condition and Supervision condition.
6. Download the configuration changes to the processor.

Gate sensor module calibration

Note	Before beginning the GSM calibration, perform a shake test to ensure the gate is secure and has no loose fittings that may cause nuisance alarms during windy conditions. Grip the fence fabric in the middle of the gate and apply a pushing /pulling motion with increasing force.

GSM calibration involves testing the gate to ensure that the detection parameter settings will detect a valid intrusion (see G6DA0209 FlexZone Detection tests). The recommended method to simulate a cut intrusion is to strike the fence fabric with the blade of a screwdriver. Hold the screwdriver a few inches away from the fence and flip your wrist to lightly strike the fence. Practice this to develop a consistent motion that applies a similar amount of force with each impact. Strike the fence at the same location for each test, waiting at least 2 seconds between impacts. The best

method to simulate a climb intrusion is to actually climb on the fence fabric (you do not have to climb over the fence). Begin the tests on the protected surface at the farthest point away from the GSM. The UCM GSM Status window displays information about the gate sensor modules. Use the UCM Magnitude Response Plot to calibrate and monitor the gate sensor module's response.

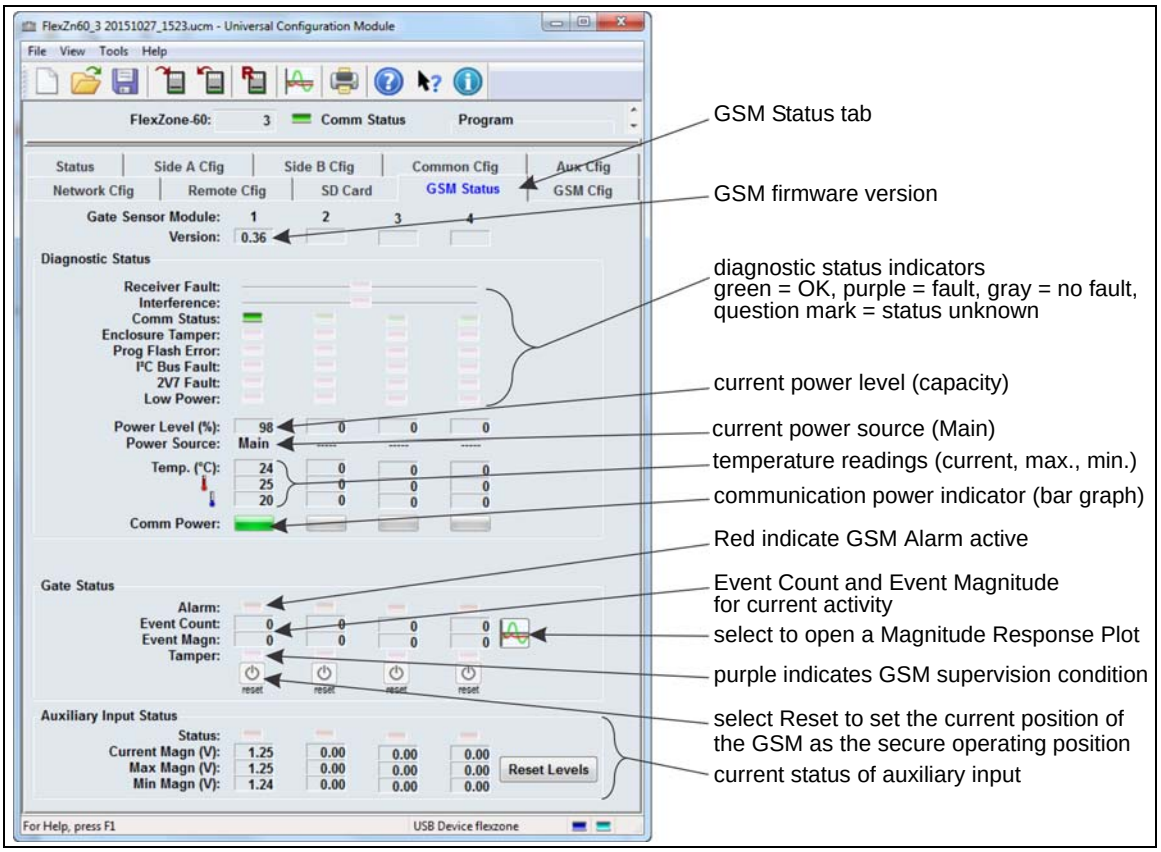

Figure 15 GSM status window

1. Connect the UCM to the FlexZone processor.
2. Select the GM Status tab.
3. With the gate in its closed secure position, select the reset button. (The reset button sets the current position of the GSM as the secure position.)
4. Verify the status of the GSM (no faults or alarms).
5. Select the Magnitude Response Plot button to open a plot window (see Figure 16:).

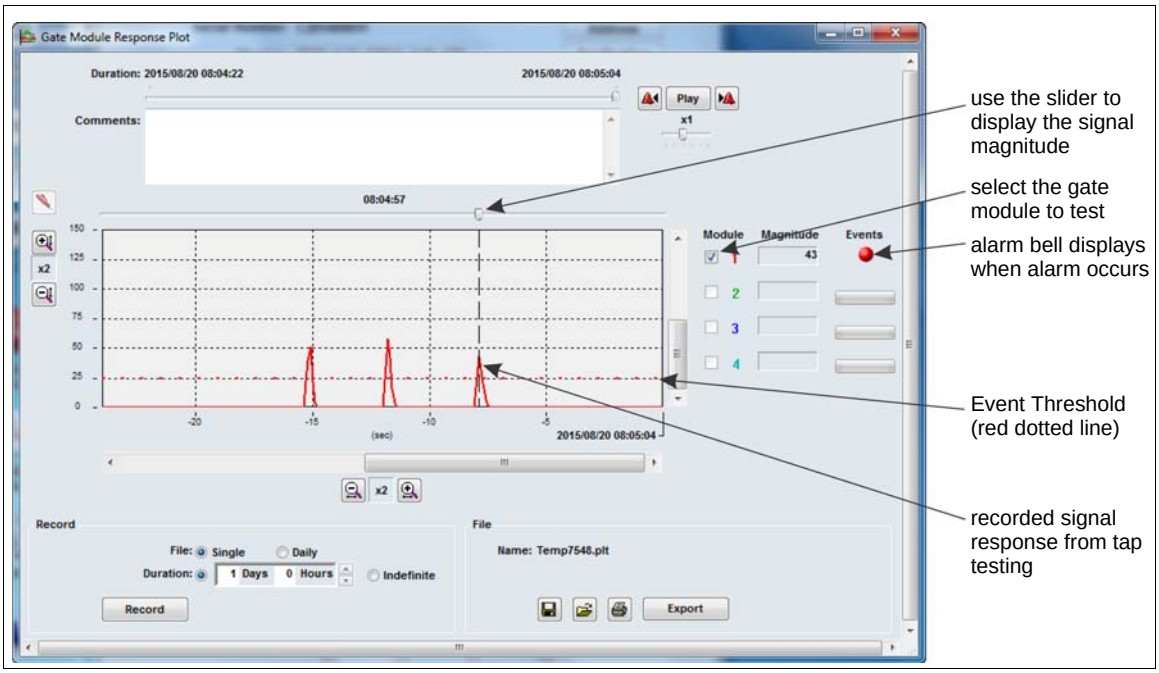

Figure 16: Gate sensor module response plot window

6. Select the Record button and have the tap tester begin the tests at the farthest point on the gate from the GSM.
7. Continue the tap testing moving closer to the GSM and then away from the GSM on the opposite side until the gate has been fully tested.
   - Each series of 3 taps should cause an alarm.
   - The tap tests that are farthest away from the GSM should have the lowest magnitude response. If tests closer to the GSM have lower magnitudes, inspect the fence for loose fabric or other issues.
   - If any of the test taps do not cause a response above the Event Threshold, repeat the tests at that location.
   - If the repeated tests remain below the Event Threshold, lower the Event Threshold and repeat the tests.
   - If all of the tests are significantly above the Event Threshold, raise the Event Threshold and repeat the tests.
   - Continue this process until each series of 3 taps causes an alarm.

You can adjust the GSM detection parameters to meet your site-specific security requirements. Once the sensor is setup, calibrated and operational you should monitor the NAR to ensure optimum settings. Minor adjustments to the Target Filters and the Event Threshold can be used to prevent nuisance alarms caused by environmental factors and fence condition.

FlexZone, Senstar and the Senstar logo are registered trademarks of Senstar Corporation. Product names and Company names included in this document are used only for identification purposes, and are the property of, and may be trademarks of their respective owners. Copyright © 2015, Senstar Corporation. All rights reserved. The information in this document is subject to change without notice. Printed in Canada.