ZYXEL COMMUNICATIONS

EE6510-10

Tri-Band Wireless BE18000 10G Ethernet Gateway

Package Contents

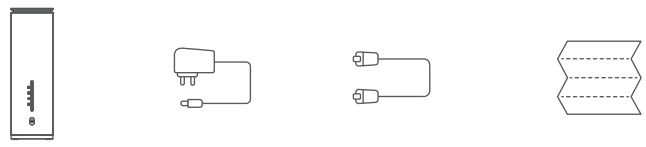

DRAFT

Quick Start Guide

Visit www.zyxel.com/us/en for updated information.

Support information
https://service-provider.zyxel.com/global/en/tech-support

See the User's Guide at www.zyxel.com for more information, including customer support and safety warnings.

US Importer
Zyxel Communications, Inc
1130 North Miller Street Anaheim, CA 92806-2001
https://www.zyxel.com/us/en/

Copyright © 2024 Zyxel and/or its affiliates. All Rights Reserved.

Step 1 Hardware Installation

1. Use the included Ethernet cable to connect the fiber modem's LAN port to the EE6510-10's **10G WAN** port as illustrated.
2. Connect the power adapter to the EE6510-10 and wait for 2 minutes. Check the EE6510-10 front panel.
3. The **Power** ⏻ /**Internet** 🌐 /**WiFi** 📶 LEDs will light up when the setup is complete.
   Note: If the lights do not turn on, please retry ① ② or contact your service provider for assistance.

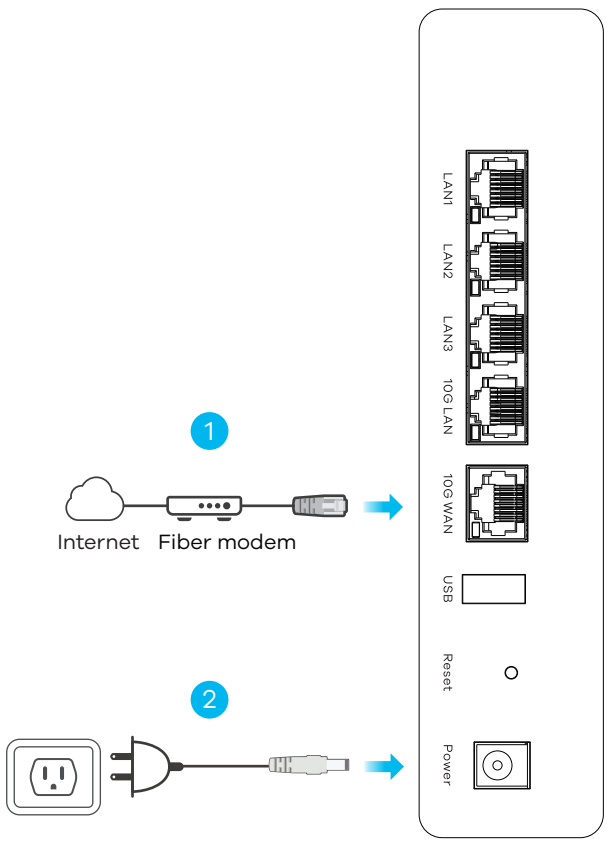

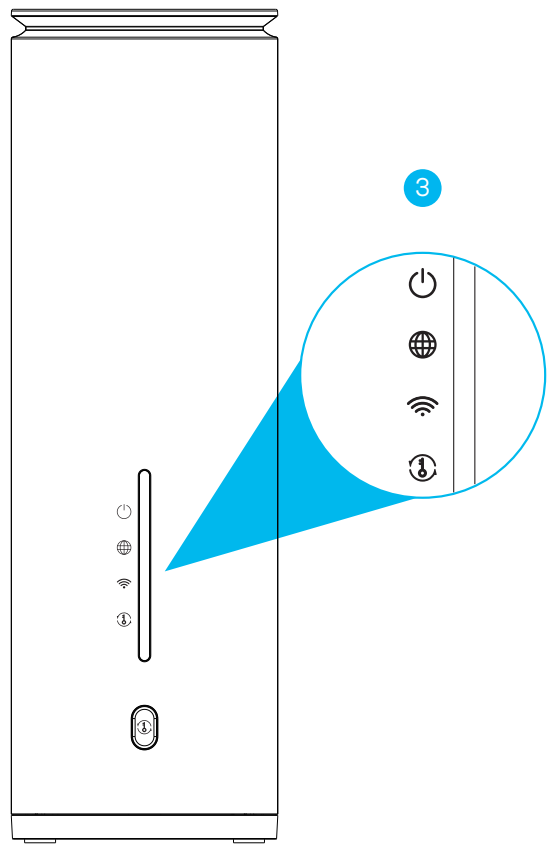

POWER	Green	**On** - Power is on. **Blinking** - Starting up.
	Red	**On** - System failure. **Blinking** - Upgrading firmware.
INTERNET	Green	**On** - Internet is ready. **Blinking** - Transmitting/receving internet data.
	Red	**On** - Attempt to get an IP address failed.
WiFi	Green	**On** - 2.4G, 5G and 6G wireless connections are ready. **Off** - 2.4G or 5G or 6G wireless connection is not ready or failed. **Blinking** - Transmitting/receving data.
WPS	Green	**Blinking** - WPS in progress. **Off** - No WPS activity.
	Orange	**Blinking** - IPTV SSID is pairing.

Step 2 WiFi Connection A or B

The label on the bottom of the EE6510-10 provides 2 ways to connect your wireless device to WiFi:
Method A: Scan QR code or Method B: Using SSID

Method A: SCAN QR code to connect WiFi

1. Use your wireless device to scan the QR code on the EE6510-10's bottom label.
2. After scanning the QR code, join this WiFi network and you can surf the internet.

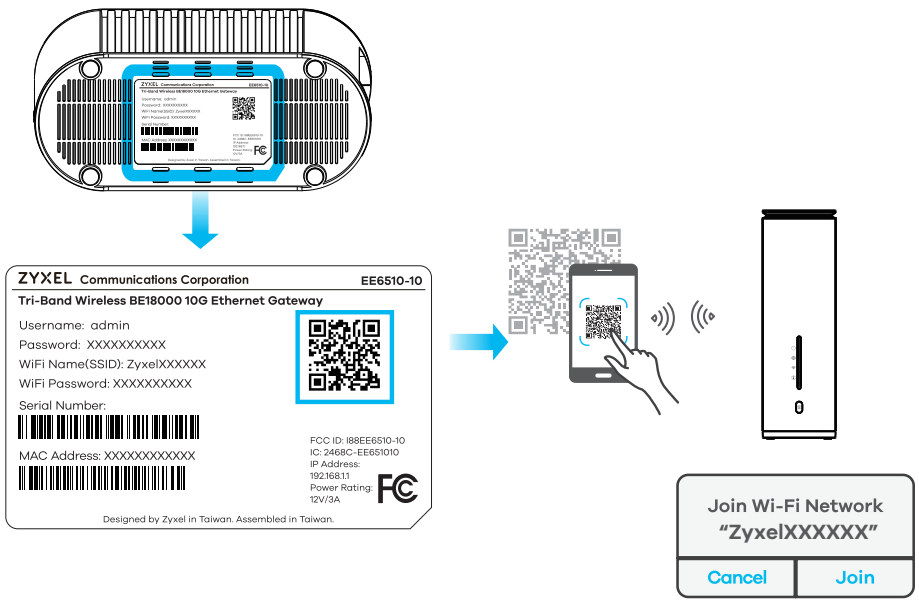

B. Using the SSID method to connect WiFi

1. The WiFi network is on the EE6510-10's bottom label.
2. On your wireless device, find this SSID and enter the WiFi Password on your wireless clients to surf the internet.

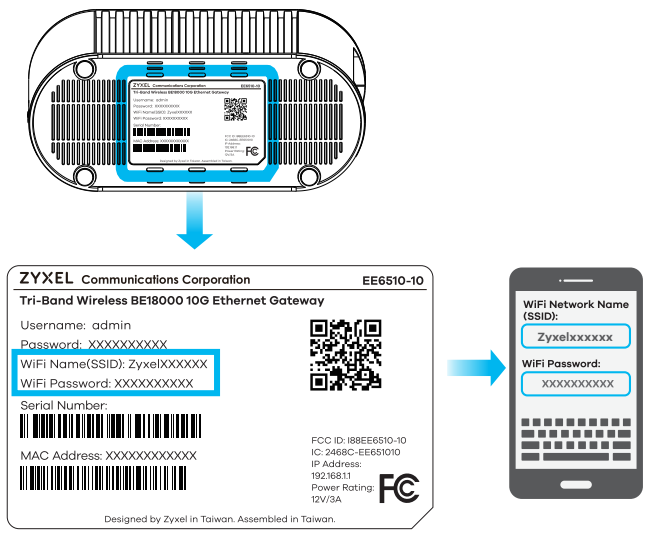

Adding a Wireless Extender

WPS button: If you have a wireless extender to add to your EE6510-10's WiFi network, press the EE6510-10's WPS button once, and press the WPS button on your extender within 120 seconds to start the WPS process.

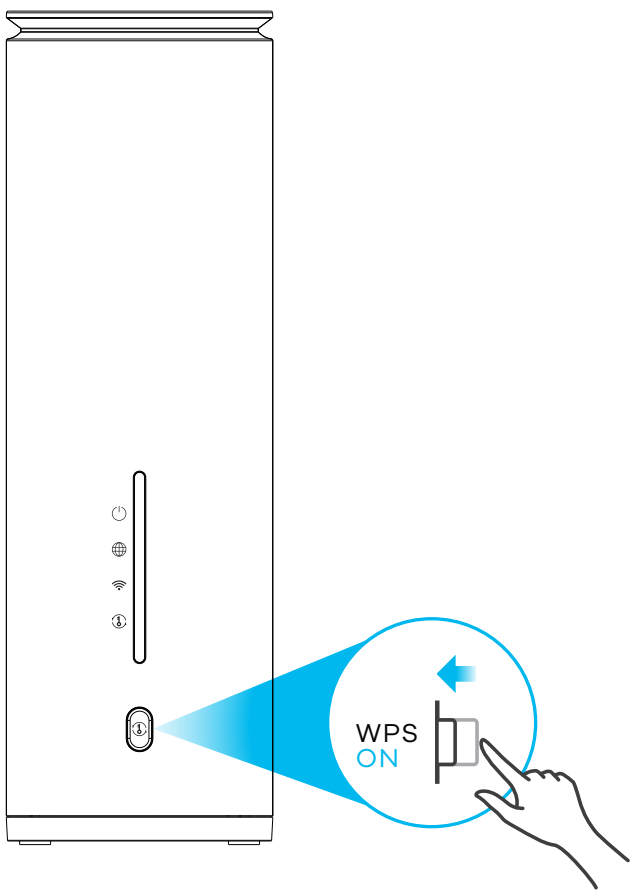

Safety Warning

See the following legal and regulation information at http://192.168.1.1/legalInfo.
Veuillez consulter les informations juridiques et réglementaires suivantes sur http://192.168.1.1/legalInfo.

ZYXEL | EE6510-10

Legal and Regulation

Model Name: EE6510-10
Product Name: Tri-Band Wireless BE18000 10G Ethernet Gateway
US importer: Zyxel Communications, Inc, 1130 North Miller Street Anaheim, CA92806-2001

FCC ID: I88EE6510-10
IC: 2468C-EE651010

FCC Warning Statement

This device complies with part 15 of the FCC Rules. Operation is subject to the following two conditions:
(1) This device may not cause harmful interference, and
(2) This device must accept any interference received, including interference that may cause undesired operation.

Indoor use only.

ISED Warning Statement

Operation shall be limited to indoor use only. / Le fonctionnement doit être limitée à une utilisation à l'intérieur seulement.
CAN ICES (B) / NMB (B)

This product contains in part some free software distributed under GPL license terms and/or GPL like license.
Please visit https://service-provider.zyxel.com/global/en/gpl-oss-software-notice for source code and additional information.

• DO NOT use this product near water, for example, in a wet basement or near a swimming pool.
• DO NOT expose your device to dampness, dust or corrosive liquids.
• DO NOT store things on the device.
• DO NOT install, use, or service this device during a thunderstorm. There is a remote risk of electric shock from lightning.
• Connect ONLY suitable accessories to the device.
• DO NOT open the device or unit. Opening or removing covers can expose you to dangerous high voltage points or other risks.
• ONLY qualified service personnel should service or disassemble this device. Please contact your vendor for further information.
• Make sure to connect the cables to the correct ports.
• Place connecting cables carefully so that no one will step on them or stumble over them.
• Always disconnect all cables from this device before servicing or disassembling.
• Please use the provided or designated connection cables/power cables/ adaptors. Connect it to the right supply voltage (for example, 110V AC in North America or 230V AC in Europe). If the power adaptor or cord is damaged, it might cause electrocution. Remove it from the device and the power source, repairing the power adapter or cord is prohibited. Contact your local vendor to order a new one.
• DO NOT remove the plug and connect it to a power outlet by itself; always attach the plug to the power adaptor first before connecting it to a power outlet.
• DO NOT allow anything to rest on the power adaptor or cord and do NOT place the product where anyone can walk on the power adaptor or cord.
• DO NOT use the device outside, and make sure all the connections are indoors. There is a remote risk of electric shock from lightning.
• CAUTION: Risk of explosion if battery (on the motherboard) is replaced by an incorrect type. Dispose of used batteries according to the instructions. Dispose of them at the applicable collection point for the recycling of electrical and electronic equipment. For detailed information about recycling of this product, please contact your local city office, your household waste disposal service or the store where you purchased the product.
• DO NOT obstruct the device ventilation slots, as insufficient airflow may harm your device. For example, do not place the device in an enclosed space such as a box or on a very soft surface such as a bed or sofa.
• The following warning statements apply, where the disconnect device is not incorporated in the equipment or where the plug on the power supply cord is intended to serve as the disconnect device,
– for permanently connected devices, a readily accessible disconnect device shall be incorporated external to the equipment;
– for pluggable devices, the socket-outlet shall be installed near the equipment and shall be easily accessible.
- Caution! The RJ-45 jacks are not used for telephone line connection.

63-100-000789Z