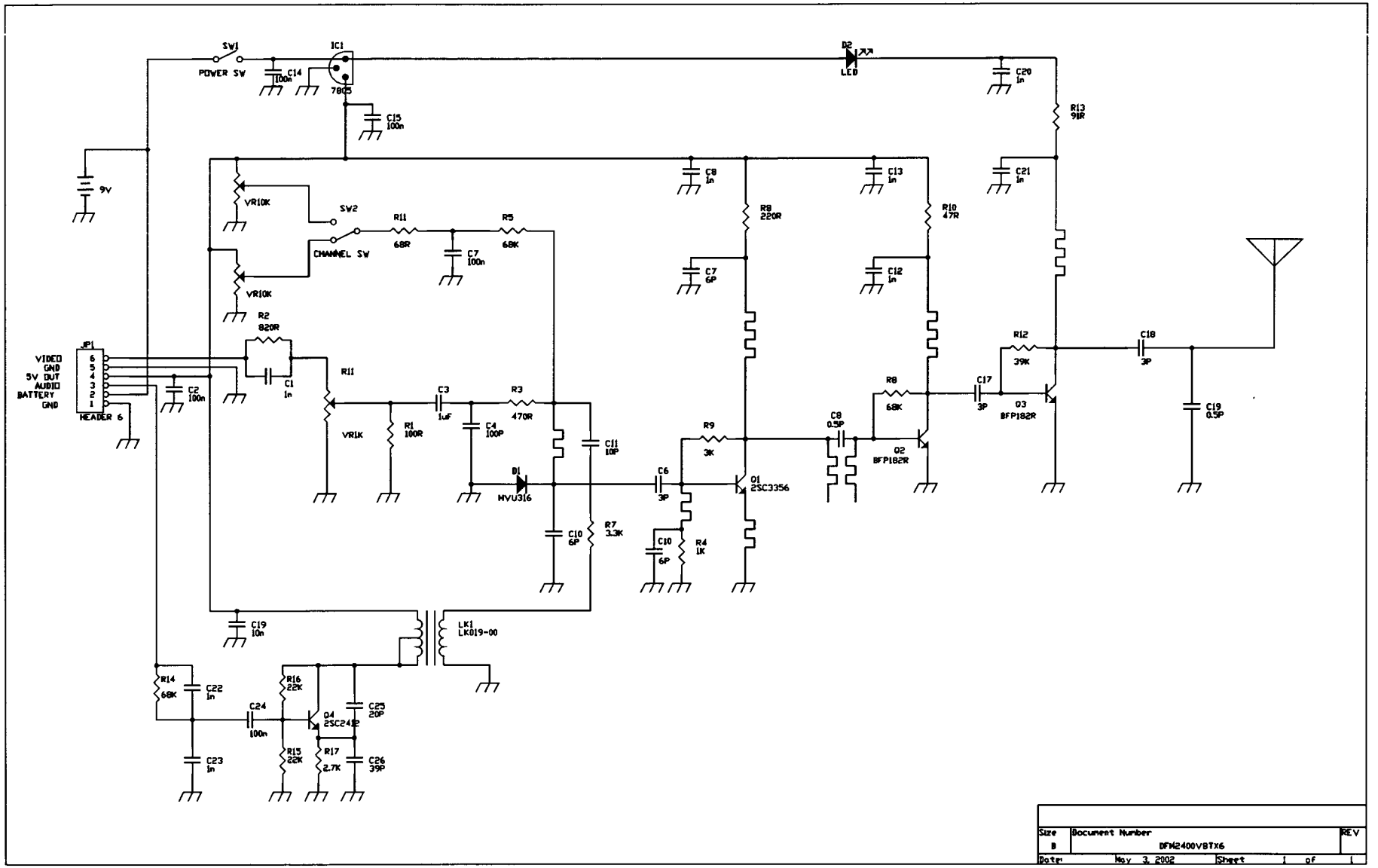

Size	Document Number	REV
B	DFM2400VBTX6	
Date:	May 3, 2002	Sheet 1 of 1

REVISION RECORD			
LTR	ECO NO:	APPROVED	DATE:

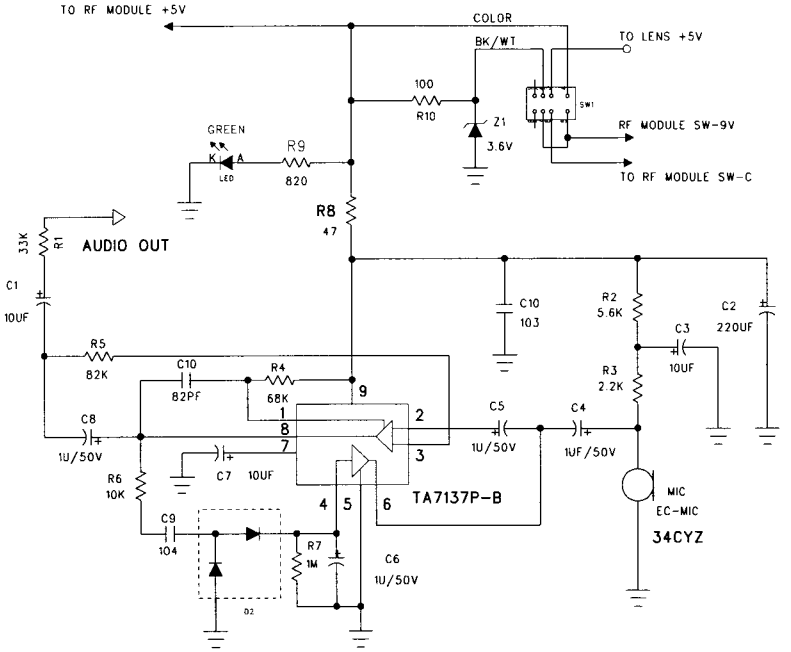

COMPANY: KWOK'S WINTY MANUFACTURING LTD.			
TITLE: HW288 MIC AMP CIRCUIT.			
DESIGNED: MEI FENG YIN	DATED: 6/JUNE/03		
DRAWING: MEI FENG YIN	DATED: 6/JUNE/03	CODE:	SIZE: C / DRAWING NO: / REV: 1.0
CHECK: MEI FENG YIN	DATED: 6/JUNE/03		
RELEASED: MEI FENG YIN	DATED: 6/JUNE/03	SCALE:	SHEET2 OF

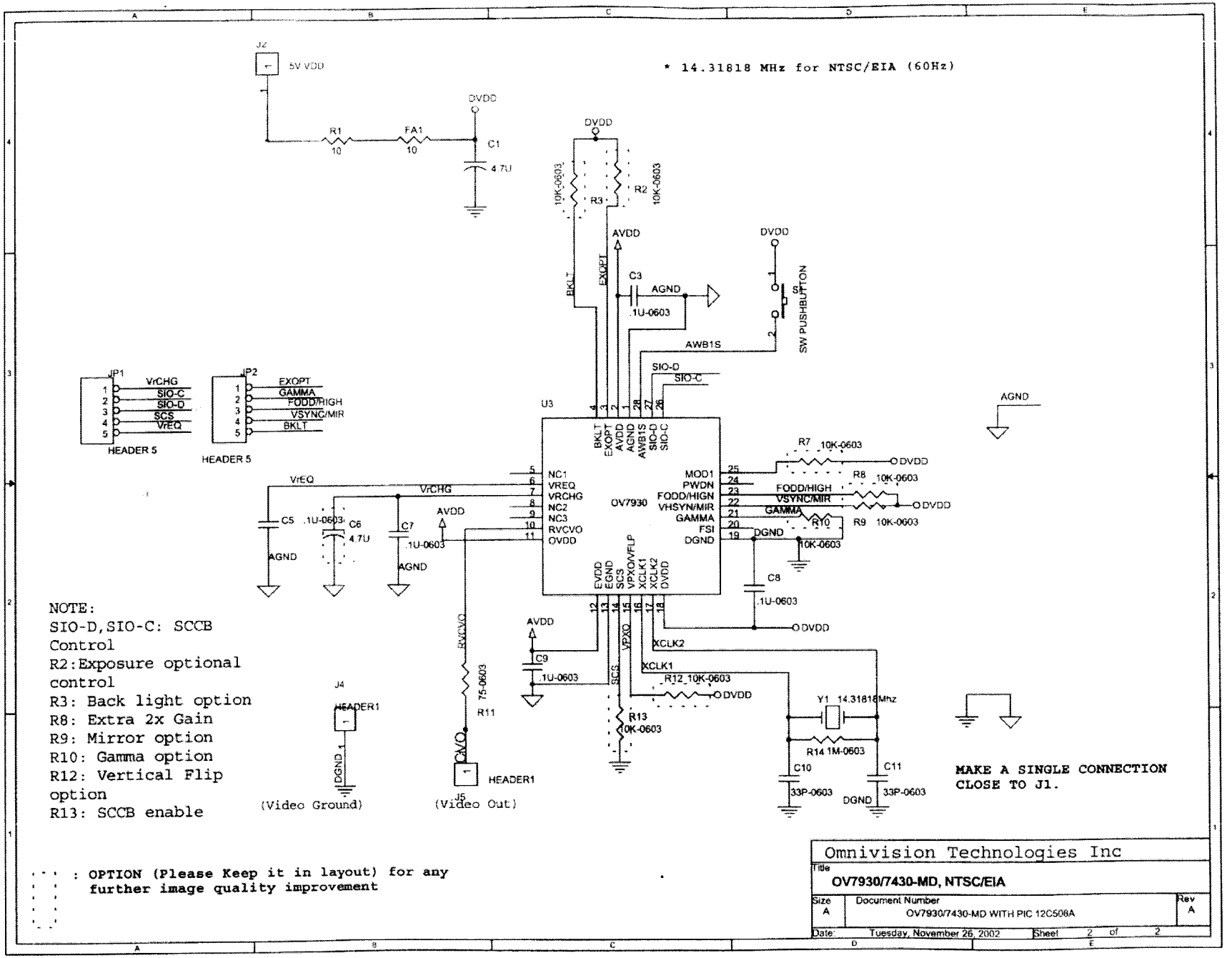

NOTE:
SIO-D,SIO-C: SCCB Control
R2:Exposure optional control
R3: Back light option
R8: Extra 2x Gain
R9: Mirror option
R10: Gamma option
R12: Vertical Flip option
R13: SCCB enable

: OPTION (Please Keep it in layout) for any further image quality improvement

Omnivision Technologies Inc		
Title: OV7930/7430-MD, NTSC/EIA		
Size: A	Document Number: OV7930/7430-MD WITH PIC 12C508A	Rev: A
Date: Tuesday, November 26, 2002	Sheet 2 of 2	